HERRIMAN CITY

STANDARDS & SPECIFICATIONS MANUAL



8th EDITION, 2024

HERRIMAN CITY

August 2024

INTRODUCTION

This manual, in conjunction with the latest edition of the Utah APWA Manual of Standard Specifications and Manual of Standard Plans and the currently adopted City ordinances, establishes requirements for the preparation, processing and approval of improvement plans for public works projects. Preparation of improvement plans and specifications that conform fully with the requirements outlined in this manual will expedite the processing, reviewing, and approval of the submitted improvement plans by Herriman City.

All local, Municipal and State laws and rules and regulations governing or relating to any portion of this work are to be incorporated into and made a part of all plans and specifications and their provisions shall be carried out by the Developer and Contractors. Anything contained in these specifications shall not be construed to conflict with any of the ordinances and regulations of the City; however, these specifications take precedence over the requirement of said rules and regulations when they describe materials, workmanship or construction of a higher standard or larger size.

It is the intent of Herriman City to continually improve this manual. On a periodic basis, proposed supplements, revisions and amendments will be reviewed and adopted.

Copies of this manual are available online at www.herriman.org and for purchase from Herriman City, 5355 West Herriman Main Street, Herriman, Utah 84096, during normal working hours.

TABLE OF CONTENTS

CHAPTER TITLE PAGE

CHAPTER 1: LAND DEVELOPMENT PROCESS 1-2

1.01 Land Development Process Flow Charts 1-2
1.01.01 Subdivision Approval Procedure Flow Chart 1-3
1.01.02 Site Plan Approval Procedure Flow Chart 1-4
1.01.03 Construction Phase & Building Department Review Process Flow Charts 1-5

1.02 Descriptions of Specific Activities 1-6
1.02.01 Plat Review 1-6
1.02.02 Improvement Bonds 1-6
1.02.03 Signing the Mylar 1-6
1.02.04 Pre-Construction Conference 1-7
1.02.05 Building Permit Application Requirements 1-7
1.02.06 Essential Infrastructure 1-7
1.02.07 Public Works Inspection and Bond Release 1-8
1.02.08 Continuous and Periodic Inspection 1-8
1.02.09 Infrastructure Improvements 1-8
1.02.10 Material & Start-Up Inspection 1-9
1.02.11 System Partial Inspection and Partial Bond Release 1-9
1.02.12 Substantial Completion Inspection 1-10
1.02.13 Final Completion 1-11
1.02.14 End of Warranty Inspection and Bond Release 1-11
1.02.15 Inspection Notice and Work Hours 1-12
1.02.16 Record Drawing Requirements 1-12

CHAPTER 2: SUBMITTAL REQUIREMENTS 2-2

2.01 General Requirements 2-2
2.01.01 Electronic File Requirements 2-3

2.02 Subdivision Submittal Requirements 2-3
2.02.01 Subdivision Plat or Plat Amendment 2-4
2.02.02 Mylar Plat 2-6

2.03 Site Plan Submittal Requirements 2-7

2.04 Final Plans Submittal Requirements 2-8

2.05 Improvement Plans 2-9
2.05.01 Title Sheet 2-9
2.05.02 General Notes 2-9
2.05.03 Grading and Drainage Plan 2-9
2.05.04 Utility Plans 2-10
2.05.05 Street Improvement Plan 2-12
2.05.06 Signing and Striping Plan 2-12
2.05.07 Street Lighting Plan 2-13
2.05.08 Dry Utility Plan 2-13
2.05.09 Landscape Planting Plans 2-13
2.05.10 Irrigation Plans 2-14
2.05.11 Wetlands & Environmental Mitigation 2-14
2.05.12 Details and Typical Sections 2-15
2.05.13 Soils Remediation Plan 2-15
2.06 Phasing Plan 2-15
2.07 Long-Term Stormwater Maintenance Agreement and Management Plan (LTSMP) 2-15
2.08 Water Model Report 2-16
2.09 Water Usage Report 2-16
2.10 Drainage Study 2-16
2.11 Traffic Impact Study 2-18
2.12 Geotechnical Report 2-19
2.13 Pavement Structural Section Design Report 2-20
2.14 Environmental Assessment 2-20
2.15 Easements and Agreements 2-20
2.16 Engineer's Opinion of Probable Construction Cost 2-21
2.17 Stormwater Pollution Prevention Plan (SWPPP) 2-21

CHAPTER 3: LAND DEVELOPMENT REQUIREMENTS 3-2

3.01 Responsibility for Infrastructure 3-2
3.02 Public vs. Private Infrastructure 3-3
3.03 Obligation to Provide Secondary Water 3-4
3.04 Easements & Agreements 3-4

3.05 Engineering Permits 3-6
3.05.01 Permits Required Before Final Plan Approval 3-6
3.05.02 Permits Required Before Construction 3-6
3.06 Stormwater Management 3-7
3.06.01 Stormwater Pollution Prevention During Construction 3-7
3.06.02 Stormwater Pollution Prevention After Construction 3-8
3.06.03 Controlling Runoff for Flood Control 3-8
3.07 Hillside Development 3-8
3.08 Improvement Bonds 3-8
3.09 City Fees 3-10
3.10 Other Financial Obligations 3-10
3.11 Developer Obligation to Hire Qualified Contractor(s) 3-10
3.12 Developer Obligation to Meet Jordan Valley Water Conservancy District Water Budget. 3-11
3.13 Developer Obligation to Provide U.S. Postal Service Accommodation 3-11

CHAPTER 4: ENGINEERING REQUIREMENTS 4-2

4.01 Subdivision Plat 4-2
4.01.01 Title Block. 4-2
4.01.02 Addressing. 4-2
4.02 Traffic Impact Study Guidelines 4-3
4.02.01 Introduction. 4-3
4.02.02 General Requirements. 4-4
4.02.03 Existing Background Information. 4-4
4.02.04 Non-Site Traffic Forecast. 4-4
4.02.05 Site Traffic Generation. 4-5
4.02.06 Site Generated Traffic Distribution and Assignment. 4-5
4.02.07 Traffic Flow Diagrams. 4-5
4.02.08 Impact Analysis Area. 4-6
4.02.09 Time Period, Study Horizon Years, and Traffic Scenarios. 4-6
4.02.10 Analysis Topics. 4-7
4.02.11 Analysis Guidelines. 4-8
4.02.12 Site and Off-Site Improvements. 4-8
4.02.13 Recommendations and Conclusions. 4-9
4.02.14 Herriman City Review and Conceptual Approval of the TIS Report 4-9
4.02.15 Report Format. 4-9

4.03 Pavement Structural Section Design 4-12
4.03.01 Flexible Pavement Design 4-12
4.03.02 Design Variables 4-13
4.03.03 Structural Section Design 4-19
4.03.04 Materials Design Requirements 4-22
4.03.05 Flexible Pavement Mix Design Requirements 4-22
4.04 Environmental Site Assessment 4-23
4.04.01 Remediation Plan. 4-24
4.04.02 Final Remediation Report 4-24
4.04.03 Development of Contaminated Properties 4-24
4.05 Street Design 4-24
4.05.01 Design Standards 4-25
4.05.02 Design Speed. 4-25
4.05.03 Vertical Design 4-25
4.05.04 Traffic Calming 4-26
4.05.05 Roadway Connections 4-27
4.05.06 Superelevation 4-27
4.05.07 Horizontal Design 4-28
4.05.08 Intersections 4-29
4.05.09 Private Roadways 4-30
4.05.10 Variations or Exceptions. 4-30
4.05.11 Street Arrangement. 4-31
4.05.12 Driveways. 4-33
4.05.13 Names and Numbers. 4-36
4.05.14 House Numbering Standard. 4-37
4.05.15 Street Trees or Shrubs. 4-37
4.05.16 Monuments. 4-37
4.05.17 Sidewalks. 4-38
4.05.18 Sidewalk Ramps. 4-38
4.06 Street Signs. 4-39
4.07 Traffic Signing, Striping, and Control Plan Design 4-39
4.08 Streetlight Design 4-41
4.08.01 Placement 4-41
4.08.02 Residential Streetlights 4-41
4.08.03 Arterial Streetlights 4-41
4.08.04 Towne Center Streetlights. 4-42
4.08.05 Post Top Bridge Streetlights 4-42

4.09 On Site Lighting. 4-42
4.10 Grading & Drainage Design 4-45
4.11 Storm Drain Design for Flood Control 4-47
4.11.01 Hydrology 4-47
4.11.02 Detention Basins 4-47
4.11.03 Retention Basins 4-48
4.11.04 Detention and Retention Basin Design Criteria 4-48
4.11.05 Stormwater Pipes 4-50
4.11.06 Stormwater Manholes, Cleanout Boxes and Catch Basins 4-50
4.12 Storm Drain Design for Water Quality 4-52
4.13 Culinary & Secondary Water Requirements 4-57
4.13.01 Pipe Material 4-58
4.13.02 Valves 4-58
4.13.03 Isolation Valves 4-58
4.13.04 Crossings 4-58
4.13.05 Underwater & Open Channel Crossings 4-58
4.13.06 Casing Requirements 4-59
4.13.07 Well Abandonment Requirements 4-59
4.13.08 Water Facility Doors 4-59
4.14 Culinary Water Design 4-60
4.14.01 Alignment 4-60
4.14.02 Mainline Diameter 4-60
4.14.03 Maximum Pressure 4-60
4.14.04 Buried Pipe Material 4-60
4.14.05 Water and Sewer Separation Standards 4-60
4.14.06 Service Laterals 4-61
4.14.07 Meters 4-61
4.14.08 Fire Hydrants 4-61
4.14.09 Sampling Stations 4-62
4.14.10 Looping 4-62
4.14.11 Dead Ends 4-62
4.14.12 Water Model Report 4-63
4.15 Secondary Water Design 4-63
4.15.01 Alignment 4-63
4.15.02 Buried Pipe Material 4-64
4.15.03 Mainline Diameter 4-64
4.15.04 Service Laterals 4-64

4.15.05 Design Criteria 4-64
4.15.06 Cross Connections 4-64
4.15.07 Isolation Valves. 4-65
4.16 Landscape Planting Design 4-65
4.16.01 Drawings and Specifications. 4-65
4.16.02 Park Strips 4-66
4.16.03 Tree Selection 4-66
4.16.04 Stamped Concrete 4-66
4.16.05 Trails 4-67
4.17 Irrigation Plans 4-67
4.17.01 Design Guidelines 4-67
4.18 Surveying/Staking 4-69
4.19 General Fencing Requirements 4-70
4.19.01 Fences and Visual Obstructions 4-70
4.20 Vinyl Fence Specification (Privacy and 4-rail fencing) 4-71
4.20.01 Materials 4-71
4.21 Noise Walls 4-71
4.21.01 New Highway or Highway Alteration 4-71
4.21.02 Federal or Federal-Aid Project 4-71
4.21.03 New Development 4-71
4.21.04 UDOT's Noise Abatement Policy 4-72
4.21.05 Noise Wall Height Determination 4-72
4.21.06 Plants or Trees 4-72
4.21.07 Noise Study 4-72
4.22 Rock Retaining Walls 4-71

CHAPTER 5: STANDARD SPECIFICATIONS 5-2

CONDITIONS OF THE CONTRACT 5-3
SECTION 00 72 00 GENERAL CONDITIONS 5-3
2.5 BEFORE STARTING CONSTRUCTION 5-3
3.2 RESOLVING DISCREPANCIES 5-3
6.2 LABOR, MATERIALS, AND EQUIPMENT 5-4
6.18 RESTORATION OF SURFACE IMPROVEMENTS 5-4
DIVISION 01 GENERAL REQUIREMENTS 5-6
SECTION 01 55 26 TRAFFIC CONTROL 5-6
1.3 SUBMITTALS 5-6

1.4 TRAFFIC CONTROL PLAN 5-6
3.4 SAFETY 5-6
SECTION 01 57 00 TEMPORARY CONTROLS 5-8
3.2 DUST AND MUD CONTROL 5-8
3.5 POLLUTION CONTROL 5-8
DIVISION 03 CONCRETE 5-9
SECTION 03 35 33 STAMPED CONCRETE 5-9
1.1 SECTION INCLUDES 5-9
2.1 COLORING 5-9
2.2 PATTERNING/STAMPING 5-9
3.5 PLACING AND FINISHING PATTERNED/STAMPED CONCRETE 5-9
DIVISION 11 EQUIPMENT 5-11
SECTION 11 68 00 PARK EQUIPMENT AND STRUCTURES 5-11
1.1 SUMMARY 5-11
1.2 SUBMITTALS 5-11
2.1 PARK EQUIPMENT 5-11
SECTION 11 68 13 PLAYGROUND EQUIPMENT 5-13
1.1 SUMMARY 5-13
2.1 PLAYGROUND EQUIPMENT 5-13
2.2 SAFETY SURFACES 5-13
3.1 USE ZONES 5-14
3.2 PLAYGROUND AREAS 5-14
3.3 EQUIPMENT INSTALLATION 5-14
DIVISION 26 ELECTRICAL 5-15
SECTION 26 56 19 ROADWAY LIGHTING 5-15
1.5 STREETLIGHTING CONSTRUCTION 5-15
2.1 CONDUCTORS 5-15
2.2 JUNCTION BOXES 5-16
DIVISION 31 EARTH WORK 5-17
SECTION 31 05 13 COMMON FILL 5-17
2.5 NATIVE 5-17
2.8 GRAVEL 5-17
DIVISION 32 EXTERIOR IMPROVEMENTS 5-18
SECTION 32 01 05 INFORMATION, REGULATORY, AND WARNING SIGNS 5-18
1.2 REFERENCES 5-18
1.5 CONTRACTOR/DEVELOPER RESPONSIBILITY 5-18
2.1 MATERIALS 5-18
2.2 COLORS AND FORMAT 5-20

3.2 INSTALLATION 5-21
SECTION 32 01 06 STREET NAME SIGNS 5-22
1.2 REFERENCES 5-22
1.3 CONTRACTOR/DEVELOPER RESPONSIBILITY 5-22
2.1 MATERIALS 5-22
3.2 INSTALLATION 5-24
SECTION 32 01 13.61 SLURRY SEAL 5-26
1.4 QUALITY ASSURANCE 5-26
2.4 MIX DESIGN 5-26
3.2 PREPARATION 5-27
3.4 APPLICATION 5-27
3.5 TOLERANCES 5-27
3.6 FIELD QUALITY CONTROL 5-28
3.7 AFTER APPLICATION 5-28
SECTION 32 01 13.64 CHIP SEAL 5-29
1.4 QUALITY ASSURANCE 5-29
2.1 BINDER 5-29
2.3 MIX DESIGN 5-29
3.2 PREPARATION 5-30
3.4 APPLICATION 5-30
3.5 ROLLING 5-31
3.6 FOG SEAL 5-31
3.8 FIELD QUALITY CONTROL 5-32
3.9 AFTER APPLICATION 5-32
SECTION 32 01 18 TEST HOLE REPAIR 5-33
1.01 SECTION INCLUDES 5-33
1.02 POTHOLE EXCAVATION 5-33
2.1 BONDING AGENT 5-34
3.1 PAVEMENT RESTORATION 5-34
3.2 SURFACE TOLERANCES 5-35
SECTION 32 11 23 AGGREGATE BASE COURSE 5-37
1.6 QUALITY ASSURANCE 5-37
SECTION 32 12 05 BITUMINOUS CONCRETE 5-38
1.1 SECTION INCLUDES 5-38
1.4 SUBMITTALS 5-38
1.5 QUALITY ASSURANCE 5-38
2.3 ADDITIVES 5-39
2.6 BITUMINOUS CONCRETE MIX DESIGN CRITERIA 5-39
SECTION 32 12 16.13 PLANT MIX BITUMINOUS PAVING 5-40
1.4 SUBMITTALS 5-40

1.10 QUALITY CONTROL 5-40
1.11 PRE-PAVING MEETING 5-41
1.12 COLD WEATHER PLAN REQUIREMENTS 5-41
3.2 PREPARATION 5-41
3.11 MINIMUM FIELD QUALITY CONTROL PRACTICES 5-42
SECTION 32 15 40 CRUSHED AGGREGATE SURFACES 5-45
1.1 SECTION INCLUDES 5-45
1.2 SURFACE REPAIR 5-45
2.1 GENERAL 5-45
2.2 GRADATION REQUIREMENTS 5-45
3.1 GENERAL 5-45
SECTION 32 16 13 DRIVEWAY, SIDEWALK, CURB, GUTTER 5-47
3.4 CONTRACTION JOINTS 5-47
3.10 CONCRETE CHIPS AND CRACKS 5-47
SECTION 32 17 23 PAVEMENT MARKING PAINT 5-47
1.1 SECTION INCLUDES 5-47
1.3 REFERENCES 5-47
1.4 DEFINITIONS 5-47
1.5 SUBMITTALS 5-47
1.6 ACCEPTANCE 5-47
2.1 PAINT 5-47
2.2 GLASS SPHERES USED IN PAVEMENT MARKING PAINT 5-47
3.1 PREPARATION 5-47
3.2 APPLICATION 5-47
3.3 CONTRACTOR QUALITY CONTROL 5-47
3.4 REMOVE PAVEMENT MARKINGS 5-47
SECTION 32 31 13 CHAIN LINK FENCES AND GATES 5-60
2.1 GENERAL 5-60
2.3 BARBED WIRE 5-60
2.6 POSTS, CAPS, RAILS, COUPLINGS 5-60
2.6 SUPPORT OR EXTENSION ARM 5-61
2.7 GATES 5-62
3.3 INSTALLATION OF POSTS 5-62
SECTION 32 31 16 WELDED WIRE FENCES AND GATES 5-63
2.1 GENERAL 5-63
2.3 BARBED WIRE 5-63
2.4 UNTREATED WOOD POSTS FOR LINES, GATES, ENDS, AND CORNERS 5-63
2.5 TREATED WOOD POSTS AND WOOD BRACE RAILS 5-64
2.7 TUBULAR STEEL FRAME GATE WITH WIRE FABRIC 5-64

3.2 INSTALLATION 5-64
SECTION 32 31 23 PLASTIC FENCES AND GATES 5-66
1.1 SECTION INCLUDES 5-66
1.2 INSTALLER QUALIFICATIONS 5-66
2.1 GENERAL 5-66
2.2 VINYL POSTS 5-66
2.3 VINYL RAILS 5-67
2.4 VINYL SLATS 5-67
2.5 VINYL GATES 5-67
3.1 MANUFACTURER'S RECOMMENDATIONS 5-68
3.2 FENCE ALIGNMENT 5-68
3.3 POST INSTALLATION 5-68
3.4 RAIL INSTALLATION 5-68
3.5 GATE INSTALLATION 5-69
3.6 CLEAN UP 5-69
SECTION 32 31 35 PRECAST CONCRETE FENCING 5-70
1.1 SECTION INCLUDES 5-70
1.2 INSTALLER QUALIFICATIONS 5-70
2.1 GENERAL 5-70
2.2 POSTS AND POST CAPS 5-71
2.3 PANELS AND PANEL CAPS 5-72
3.1 FENCE ALIGNMENT 5-72
3.2 FOOTINGS 5-72
3.3 CLEAN UP 5-73
SECTION 32 84 23 UNDERGROUND IRRIGATION SYSTEMS 5-74
1.1 SUMMARY 5-74
1.2 REFERENCE STANDARDS 5-74
1.3 DEFINITIONS 5-74
1.4 PERFORMANCE REQUIREMENTS 5-75
1.5 SUBMITTALS 5-76
1.6 QUALITY ASSURANCE 5-77
1.7 PROJECT CONDITIONS 5-78
2.1 GENERAL 5-78
2.2 PIPE 5-78
2.3 FITTINGS 5-79
2.4 VALVES 5-80
2.5 VALVE BOXES 5-82
2.6 BACKFLOW PREVENTION ASSEMBLY 5-82
2.7 SWING-LINE PHYSICAL DISCONNECT ASSEMBLY (WHERE ALLOWED) 5-83

2.8 FILTER AND ENCLOSURE 5-83
2.9 AUTOMATIC CONTROL SYSTEM 5-84
2.10 TRADITIONAL CONTROL VALVE WIRE 5-84
2.11 TWO-WIRE CONTROL VALVE WIRE 5-85
2.12 SPRINKLER HEADS 5-86
2.13 DRIP IRRIGATION 5-86
2.14 FLOW SENSING EQUIPMENT 5-87
3.1 GENERAL 5-87
3.2 CONSTRUCTION STAKING 5-89
3.3 EXCAVATION AND BACKFILLING 5-89
3.4 POINT-OF-CONNECTION 5-91
3.5 ELECTRICAL POWER SUPPLY AND AUTOMATIC CONTROLLER 5-92
3.6 PIPE AND FITTINGS 5-92
3.7 THRUST BLOCKS 5-93
3.8 PIPE SLEEVES 5-94
3.9 VALVES 5-94
3.10 VALVE BOX 5-95
3.11 BACKFLOW PREVENTION ASSEMBLY 5-95
3.12 SWING-LINE PHYSICAL DISCONNECT ASSEMBLY (WHERE ALLOWED) 5-95
3.13 FILTER & ENCLOSURE 5-96
3.14 WIRE & CABLES 5-96
3.15 SPRINKLERS 5-97
3.16 RECORD DRAWINGS 5-99
3.17 OPERATIONAL TEST AND MAJOR INSPECTIONS 5-99
3.18 WARRANTY AND MAINTENANCE 5-101
SECTION 32 94 23 PLANTING 5-103
1.1 SUMMARY 5-103
1.2 REFERENCES 5-103
1.3 QUALITY ASSURANCE 5-104
1.4 PRODUCT DELIVERY, STORAGE, AND HANDLING 5-104
1.5 ACCEPTANCE 5-104
1.6 SAMPLES 5-104
2.1 GENERAL 5-105
2.2 PLANTS 5-106
2.3 SEED 5-107
2.4 SOD 5-109
2.5 TREE STAKES & TIES 5-109
2.6 TOPSOIL 5-109
2.7 WEED BARRIER FABRIC 5-110

2.8 MULCH 5-110
2.9 FERTILIZERS 5-110
2.10 HERBICIDES 5-111
2.11 MOWSTRIP 5-111
3.1 GENERAL 5-111
3.2 PLANTING SEASONS 5-112
3.3 TOPSOIL 5-112
3.4 PLANT CONDITION 5-113
3.5 PLACEMENT OF PLANTS 5-114
3.6 PLANT INSTALLATION 5-114
3.7 STAKING 5-116
3.8 WATERING 5-116
3.9 WEED BARRIER FABRIC (IF SPECIFIED) 5-117
3.10 MULCHING 5-117
3.11 SOD INSTALLATION 5-117
3.12 HYDROSEEDING DISTURBED AREAS (NOT TURF) 5-118
3.13 DRILL SEEDING 5-120
3.14 CLEAN UP 5-120
3.15 RECORD DOCUMENTS 5-121
3.16 MAINTENANCE 5-121
3.17 WARRANTY 5-123

DIVISION 33 UTILITIES 5-125
SECTION 33 05 03 COPPER PIPE 5-125
2.2 CONNECTIONS 5-125
SECTION 33 05 05 DUCTILE IRON PIPE 5-126
2.1 PIPE AND FITTINGS 5-126
2.2 COVERINGS 5-126
3.1 INSTALLATION 5-126
SECTION 33 05 06 POLYETHYLENE PIPE 5-127
2.2 CORRUGATED WALL PIPE SYSTEMS 5-127
2.4 PRESSURIZED POLYETHYLENE PIPE AND TUBING 5-127
3.1 INSTALLATION 5-127
SECTION 33 05 07 P POLYVINYL CHLORIDE PIPE 5-129
2.1 PRESSURE PIPE SYSTEM 5-129
3.1 INSTALLATION 5-129
SECTION 33 05 23.35 TRENCHLESS UTILITY INSTALLATION 5-130
1.1 SECTION INCLUDES 5-130
1.2 REFERENCES 5-130
2.1 STEEL CASING 5-130

2.4 CASING SPACERS 5-131
2.5 CASING END SEALS 5-131
3.2 JACKING PROCEDURE 5-132
3.4 PIPE SUPPORT IN CASING TUNNEL 5-132
3.5 CASING SPACERS 5-132
SECTION 33 05 25 PAVEMENT RESTORATION 5-134
3.5 BITUMINOUS PAVEMENT RESTORATION 5-134
SECTION 33 08 00 COMMISSIONING OF WATER UTILITIES 5-135
1.2 REFERENCES 5-135
1.5 PROJECT CONDITIONS 5-135
3.2 PREPARATION 5-135
3.3 GRADE AND ALIGNMENT TEST 5-136
3.6 EXFILTRATION TEST 5-136
3.8 OBSTRUCTION TEST 5-137
SECTION 33 11 00 WATER DISTRIBUTION AND TRANSMISSION 5-138
1.2 REFERENCES 5-138
1.3 PERFORMANCE REQUIREMENTS 5-138
2.1 PIPES AND FITTINGS 5-139
2.3 VALVE BOX 5-139
2.6 TAPPING SADDLES 5-140
2.7 SERVICE CONNECTIONS 5-140
2.8 ACCESSORIES 5-140
2.9 BACKFLOW PREVENTION DEVICES 5-141
2.10 TAPPING SLEEVES 5-141
3.3 LAYOUT 5-142
3.4 INSTALLATION – PIPE AND FITTING 5-142
3.6 INSTALLATION – VALVES AND VALVE BOXES 5-142
3.9 INSTALLATION – SERVICE LINE 5-142
3.16 INSTALLATION – METER BOXES 5-143
3.17 POLY WRAP 5-144
3.18 INSTALLATION – BACKFLOW PREVENTION DEVICES 5-144
SECTION 33 12 16 WATER VALVES 5-145
2.1 VALVES - GENERAL 5-145
2.2 VALVES – GATE VALVES 5-145
2.3 VALVES – BUTTERFLY VALVES 5-145
2.5 VALVES – CHECK VALVES 5-146
2.9 VALVES – CONTROL VALVES 5-146
2.10 VALVES – COMBINATION VALVES 5-146
2.11 VALVES – BALL VALVES 5-146
2.12 VALVES – CORPORATION STOPS 5-147

SECTION 33 12 17 BACKFLOW PREVENTION DEVICE OR ASSEMBLY 5-148
1.1 SECTION INCLUDES 5-148
1.2 REQUIREMENTS 5-148
1.3 REFERENCES 5-148
1.4 SUBMITTALS 5-149
2.1 AIR GAP 5-149
2.2 REDUCED-PRESSURE BACKFLOW PREVENTION ASSEMBLY 5-149
2.3 DOUBLE CHECK VALVE ASSEMBLY 5-150
2.4 DUAL CHECK VALVE ASSEMBLY 5-150
2.5 PRESSURE VACUUM BREAKER 5-150
2.6 ATMOSPHERIC VACUUM BREAKER 5-150
3.1 INSTALLATION – AIR GAP 5-151
3.2 INSTALLATION – REDUCED PRESSURE BACKFLOW PREVENTION ASSEMBLY 5-151
3.3 INSTALLATION – DOUBLE CHECK VALVE ASSEMBLY 5-151
3.4 INSTALLATION – DUAL CHECK VALVE DEVICE 5-152
3.5 INSTALLATION – PRESSURE VACUUM BREAKER 5-152
3.6 INSTALLATION – ATMOSPHERIC VACUUM BREAKER 5-152
3.7 TESTING AND START-UP 5-153
SECTION 33 12 18 UNDERGROUND PACKAGED PRESSURE REDUCING STATION 5-154
1.1 SCOPE OF WORK 5-154
1.2 QUALITY ASSURANCE 5-154
1.3 SUBMITTAL 5-155
2.1 EQUIPMENT CAPSULE 5-155
2.2 TANK PENETRATION SLEEVE 5-156
2.3 ENTRANCE MANWAY 5-157
2.4 ACCESS LADDER 5-158
2.5 SAFETY MATTING 5-158
2.6 COATINGS – CORROSION PROTECTION 5-158
2.7 CATHODIC PROTECTION 5-161
2.8 PIPING 5-161
2.9 PIPE SUPPORTS 5-162
2.10 FUSION BONDED EPOXY COATING - STEEL PIPING 5-163
2.11 SERVICE CONNECTIONS ON INTERNAL PIPING 5-163
2.12 RESTRAINING POINTS 5-164
2.13 COMPRESSION COUPLINGS 5-164
2.14 COMBINATION PRESSURE GAUGES 5-164
2.15 SAMPLE TAP 5-165
2.16 HOSE BIBB WITH VACUUM BREAKER 5-165

2.17 BUTTERFLY VALVES 5-165
2.18 PRESSURE REDUCING VALVE 5-165
3.1 PRESSURE TESTING 5-166
3.2 CONFORMANCE TO BASIC ELECTRICAL STANDARDS 5-166
3.3 U.L. LISTING 5-167
3.4 E.T.L. LISTING 5-167
3.5 EQUIPMENT GROUNDING 5-167
3.6 ELECTRICAL APPARATUS – SURGE PROTECTION DEVICE 5-168
3.7 ELECTRICAL APPARATUS - POWER PANEL 5-168
3.8 ELECTRICAL APPARATUS - CONDUIT AND WIRING 5-168
3.9 ELECTRICAL APPARATUS – RECEPTACLES 5-169
3.10 CONVENIENCE GROUP - LIGHTING 5-169
3.11 CONVENIENCE GROUP - HEATER 5-170
3.12 CONVENIENCE GROUP - EXHAUST FAN 5-170
3.13 CONVENIENCE GROUP - SUMP PUMP 5-170
3.14 CONVENIENCE GROUP - DEHUMIDIFIER 5-171
3.15 FACTORY START-UP SERVICE 5-171
3.16 WARRANTY 5-171
3.17 GENERAL LIABILITY INSURANCE 5-172
SECTION 33 12 19 HYDRANTS 5-173
2.1 DRY-BARREL FIRE HYDRANT 5-173
SECTION 33 12 33 WATER METER 5-174
2.4 METER BOXES 5-174
2.5 METER SETTERS 5-174
SECTION 33 13 00 DISINFECTION 5-175
2.1 DISINFECTANT 5-175
3.2 DISINFECTION OF WATER LINES 5-175
SECTION 33 41 00 STORM DRAINAGE SYSTEMS 5-176
1.7 ACCEPTANCE 5-176
2.1 PIPING AND FITTINGS 5-176
2.5 CLEANOUTS AND MANHOLES 5-176
2.6 INLETS, CATCH BASINS, CLEANOUTS 5-177

CHAPTER 6: STANDARD PLANS 6-2

HERRIMAN CITY AMENDMENTS, CLARIFICATIONS, AND ADDITIONS TO THE APWA MANUAL OF STANDARD PLANS – 2017 EDITION 6-2

Part 1 Amendments and Clarifications 6-2

Part 2 Additions 6-2

APPENDIX A: BOND AGREEMENTS ..... A

APPENDIX B: BASIC FORMS OF ACKNOWLEDGEMENT ..... B

APPENDIX C: USPS NOTICE REGARDING MAILBOXES C

APPENDIX D: BANNER PERMIT AND LOCATION MAPS ..... D

APPENDIX E: LAND DISTURBANCE PERMIT ..... E

APPENDIX F: HILLSIDE DEVELOPMENT MAP ..... F

APPENDIX G: WATER EFFICIENCY STANDARDS ..... G

APPENDIX H: FIRE FLOW TEST REPORT REQUIREMENTS ..... H

APPENDIX I: FLOODPLAIN DEVELOPMENT PERMIT I

APPENDIX J: STORMWATER QUALITY REPORT TEMPLATE ..... J

APPENDIX K: PROJECT WATER DEMAND SUMMARY FORM ..... K

APPENDIX L: LOGO AREA MAP L

APPENDIX M: DEVIATION FROM STANDARDS ..... M

APPENDIX N: HYDRAULIC MODELING REVIEW CHECKLIST ..... N

SECTION 1:
LAND DEVELOPMENT PROCESS

CHAPTER 1: LAND DEVELOPMENT PROCESS

This chapter provides general guidance for the City's approval procedure. The actual process depends on the unique situation of each development or project. Steps may be combined, added, replaced or eliminated as deemed necessary by the City. Additional information may also be required.

1.01 Land Development Process Flow Charts

The following flow charts show the important steps involved in the plan review of subdivisions and site plans as well as the construction process for each. All land developments in Herriman City shall follow the appropriate procedures on the following pages.

1.01.01 **Subdivision Approval Procedure Flow Chart**

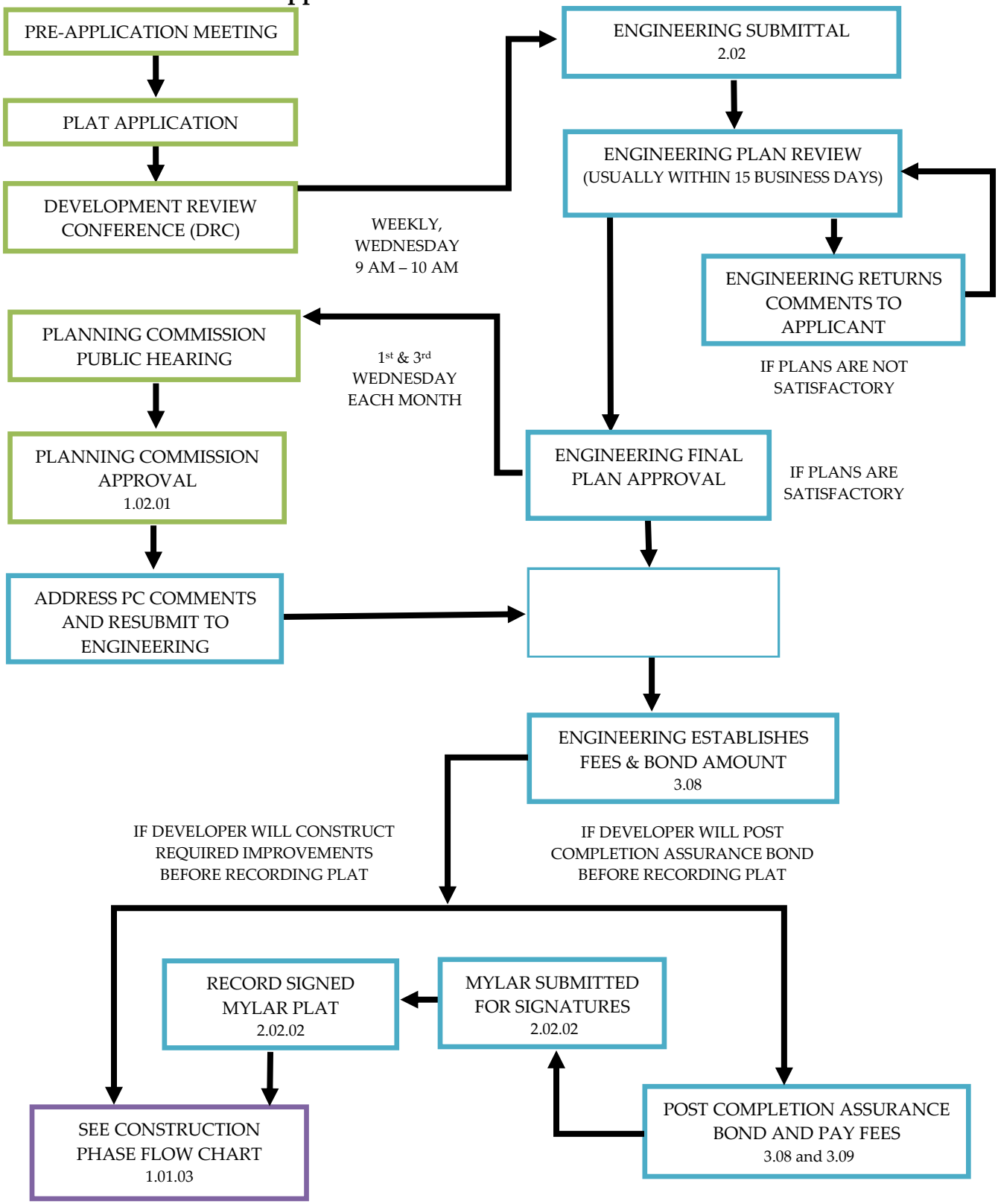

1.01.02 **Site Plan Approval Procedure Flow Chart**

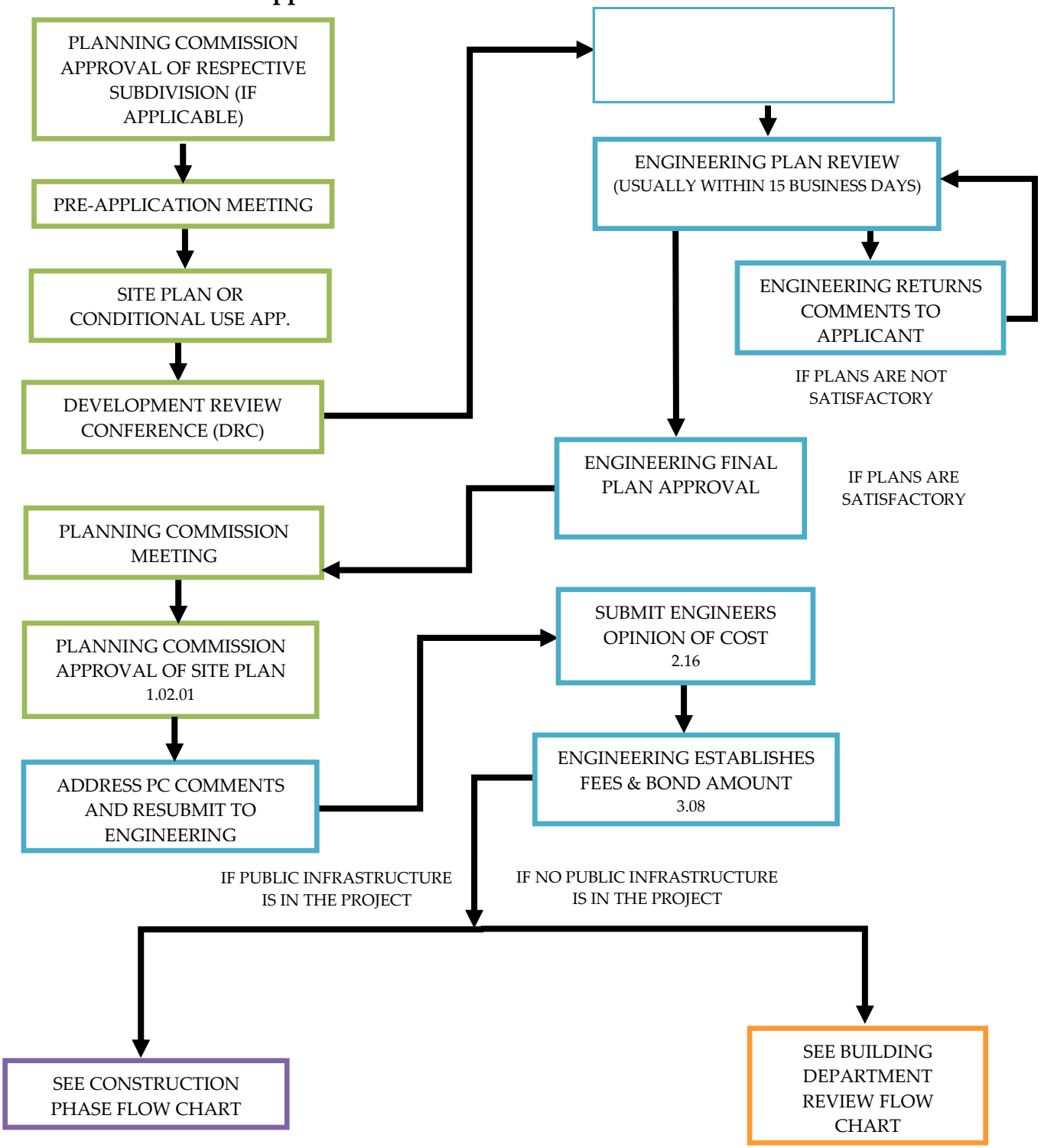

1.01.03 Construction Phase & Building Department Review Process Flow Charts

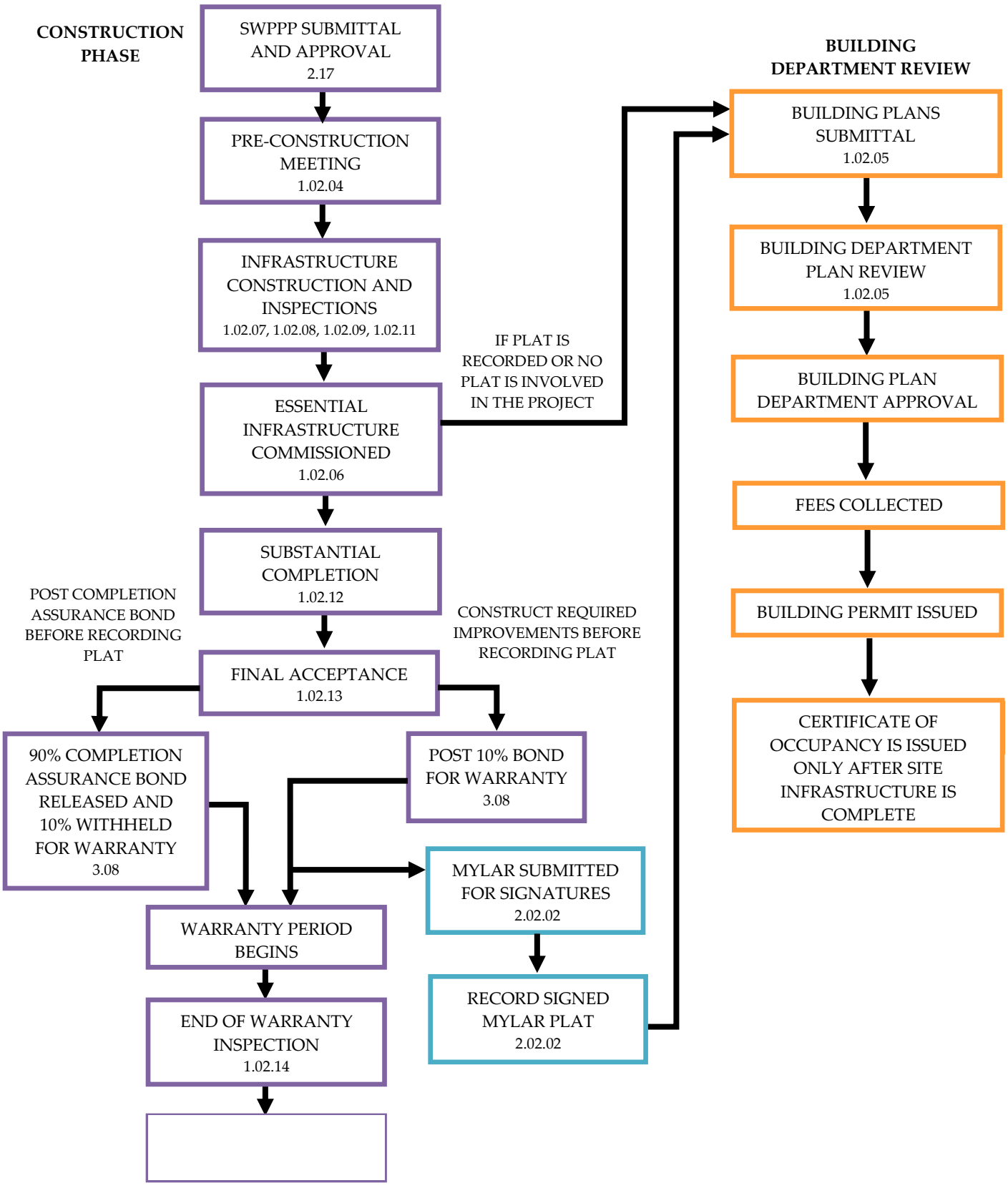

1.02 Descriptions of Specific Activities

The following are descriptions of specific activities in the process.

1.02.01 **Plat Review**

All subdivision or site plan projects are subject to a Plat Review and Planning Commission approval. Applicants are responsible to provide and address all items as listed in the Herriman City Ordinance and Chapter 2 at the time of submittal. Herriman City staff will begin review upon receipt of all submittal items required in the Herriman City Ordinance and Chapter 2 of this manual. Herriman City staff will schedule a meeting with Planning Commission once the project has demonstrated compliance with Herriman City Ordinance and the Herriman City Standards contained in this manual. Administrative and Planning Commission approvals expire according to Herriman City Ordinance.

Once reviewed for compliance and approved by Planning Commission, applicable bonds and fees will be calculated and the totals will be provided to the Developer.

Approval of construction drawings will only be valid for two years from the date of approval. After two years from the time of approval, drawings must be resubmitted prior to construction for a staff review to ensure current design and construction standards are reflected in the plans. A revised fee of 30% of the original fee will be charged to re-review the submittal.

1.02.02 **Improvement Bonds**

Developers must construct the required improvements prior to recording a subdivision plat or protect the City and lot buyers from a failure to construct the improvements after recording the plat and selling lots by providing a financial guarantee that the improvements will be constructed. This is done in the form of an Improvement Completion Assurance Bond and an Improvement Warranty Bond.

1.02.03 **Signing the Mylar**

The following must occur before Herriman City will sign the mylar:

1. Engineering Plans must be found in compliance.
2. Fees must be paid.
3. All required improvements must be completed and accepted by Herriman City, and an Improvement Completion Assurance Bond or an Improvement Warranty Bond must be posted for those improvements not already completed and accepted.

1.02.04 **Pre-Construction Conference**

After approval and prior to the start of construction, any excavation, or other work is begun on the development, a Pre-Construction Meeting is required, including the Developer, Contractor, and the following city departments: Water, Public Works Inspection, Street Lighting, Fire Department and Engineering.

A pre-construction conference application shall be submitted by the developer and can be found on the City's website. This application must be turned in determined complete prior to scheduling the date of the pre-construction conference. All fees and bonds, as applicable, must be paid and posted before the conference may be scheduled. The meeting will be conducted by the City Engineer or a representative. Items to be discussed shall relate to project scheduling, materials used, coordination with all affected parties, SWPPP requirements and permitting, and other important items as may be deemed necessary by the City Engineer. Minutes will be taken and distributed to all in attendance. The Contractor will not be permitted to proceed with construction unless this meeting takes place and those responsible for all construction activities are in attendance unless a land disturbance permit (Appendix E) has been acquired.

1.02.05 **Building Permit Application Requirements**

Building Permit Applications may be submitted for review upon completion of the following:

1. Planning Commission Approval
2. Improvements Plans have been reviewed for compliance.
3. Subdivision Plat recorded or post completion assurance bond for required infrastructure.
4. Planning Commission requirements met, as applicable at that stage of the development.
5. Essential infrastructure completed (see part 1.02.06).

1.02.06 **Essential Infrastructure**

Essential infrastructure shall be defined as:

1. A commissioned water system per APWA Section 33 08 00.
2. Fire flow test report indicating adequate fire flow. See Appendix H for test and report requirements.
3. An all-weather surface installed along the frontage of the proposed structure requesting the Building Permit. All-weather surface shall be either 1) full completion of the roadway per the approved plans, or 2) a temporary road compliant with the Local Fire Authority requirements.

1.02.07 **Public Works Inspection and Bond Release**

Throughout the construction of the proposed improvements, the Contractor shall ensure that construction is being performed in accordance with the approved plans and the latest edition of the Herriman City Standards and Specifications Manual. All construction work, installation, or repair of improvements associated with development projects shall be subject to Public Works Inspection. It shall be the responsibility of the developer to ensure that inspections occur as indicated in the specifications, on the permit and as discussed in the preconstruction conference. All projects will be assigned a Public Works Inspector. This person shall be the point of contact for the contractor from the City throughout the duration of the project. The inspector will notify the developer of any deficiencies in the work and may issue a letter of non-compliance if necessary. Any deficiencies shall be fixed in a timely manner.

1.02.08 **Continuous and Periodic Inspection**

Certain types of construction may require continuous inspection, while others will only require periodic inspections. The type and amount of inspection performed by the City shall be at the sole discretion of the City Engineer. On construction requiring continuous or periodic inspection, no work shall start until an inspection request has been made to the City by the Developer and the required submittals received and approved by the City.

Throughout the inspection process, the contractor shall ensure that the infrastructure installed is inspected and surveyed by the City's GIS Department. Any infrastructure installed and buried without inspection or survey shall be subject to excavation and exposure of the infrastructure until it is acceptable by the inspector and surveyed by the GIS department. Continuous inspection may be required on the following types of work:

1. Placement of street surfacing.
2. Placing of concrete for curb and gutter, sidewalks, and other structures.
3. Installation of storm drainage pipe, water pipe, valves, and hydrants.
4. Testing and backfilling as per approved specifications.
5. Any connections to the city utilities.
6. Street grading and gravel base placement and compaction.

1.02.09 **Infrastructure Improvements**

In order to better manage the flow of each project, the City shall calculate the bond according to its system. The inspection process shall follow the systems also to define stages of each project and bonds may be released for each system as they are approved. The eight systems include:

1. Storm Drain System Improvements
2. Culinary Water System Improvements
3. Secondary Water System Improvements
4. Roadway System Improvements
5. Irrigation and Landscaping System Improvements
6. Street Light System
7. SWPPP Implementation and Removal of Controls after Construction
8. Miscellaneous System Improvement

1.02.10 **Material & Start-Up Inspection**

At the beginning of each project, the beginning of each system, and at the beginning of each phase of construction, the contractor shall request a system material inspection once the materials are on site to ensure proper material prior to installation. The contractor shall request another inspection at the start-up of each phase of construction to observe and ensure proper installation practices.

1.02.11 **System Partial Inspection and Partial Bond Release**

During the construction of each system, the developer may request a partial release at the completion of any of the defined systems. The system partial inspection does not guarantee or warrant any work but is a measure to determine which improvements are eligible for a system partial bond release. Such inspections for partial release may be scheduled when:

1. Storm Drain System Improvements are complete, a video of all storm drain infrastructure and the associated summary report of the video is submitted and accepted, GIS department has shot the infrastructure and the system is commissioned. This shall apply to all public and private infrastructure. A letter, stamped and signed by a licensed professional engineer, shall be provided certifying that the facilities have been constructed in conformance with approved plans and conform to all local and state design standard requirements, or if not, include information on how it was constructed. This shall pertain to water quantity and water quality components of the project. Or,

2. Culinary Water System Improvements must be complete and commissioned. Fire flow test shall be performed as required by the Local Fire Authority. The test report shall be submitted to the Local Fire Authority and the City Engineer (engineering@herriman.org). The Developer/Contractor is responsible to pay for this test. Or,

3. Secondary Water System Improvements shall be complete and commissioned, or

4. Roadway System Improvements including asphalt, curb and gutter, and sidewalk shall be completed according to the approved plans and the Herriman City Standards and Specifications Manual. Bond Release for the Roadway System may be withheld if the "dry" utilities have not been installed to ensure that new roadways are not required to be cut. Or,

5. Irrigation and Landscaping System Improvement shall be completed after all the improvements bonded for are in and the system is functioning according to Herriman City standard. Or,

6. Streetlighting System substantial completion shall be completed after streetlights are installed, connected to power, and have completed a five-day burn. Streetlight Record Drawings, in pdf format, are required to be submitted to the City, which shows the location and address for each meter box and streetlight. Or,

7. SWPPP Implementation substantial completion shall be completed after all other construction has been completed, disturbed ground has been stabilized, all temporary construction BMPs have been removed, and the proper Notice of Termination for the State UPDES has been filed and the SWPPP inspector has verified that the site is stabilized. Or,

8. Miscellaneous System Improvements, including but not limited to, street monuments, street signs, or any other improvement not listed above, shall be completed after all the improvements bonded for are in and the system is functioning according to Herriman City standard.

A partial bond release may be granted up to 90% of the Completion Assurance Bond for that system upon approval of the System Partial Inspection.

1.02.12 **Substantial Completion Inspection**

Substantial Completion Inspection shall be made by the City Engineer or a representative after ALL systems are complete. Contractor shall submit a Substantial Completion Inspection Application to the City prior to scheduling the inspection. A Punch List of any faulty or defective work will be submitted to the contractor up to 14 days after the inspection.

The contractor shall have 30 days to address the items listed in the Punch List from the date the Punch List was provided to the contractor or the developer. If the contractor fails to complete the Punch List within that time, the City Engineer, at their discretion, may complete the defective work and bill the Contractor using the monies in escrow or otherwise held by the City to complete the defective work.

1.02.13 **Final Completion**

Final Completion of the project will be granted upon approval of the following:

1. All Substantial Completion Inspection and Punch List items complete
2. Record Drawings (see part 1.02.16 for Record Drawing requirements)
3. Fire Flow Test Report

Final Completion begins the warranty period for the project and any remaining Completion Assurance Bond up to a maximum 90% may be released.

1.02.14 **End of Warranty Inspection and Bond Release**

End of Warranty Inspection occurs at a minimum of twelve months from the time of Final Completion. This inspection is an audit to determine if the system construction is still free of defects and deficiencies.

The developer shall warrant and guarantee (a retainage of an escrow or other security in the amount as dictated by applicable City ordinances) that the improvements and every part thereof will remain in good and serviceable condition for a minimum period of twelve months. Additionally, the developer shall ensure that the improvements are in good condition during that warranty period at no cost to the City. Any repairs required by the City shall be made at no cost to the City. It is further agreed and understood that the determination for necessity of repairs and maintenance of the work rest with the City Engineer. The Engineer's decision upon the matter shall be final and binding upon the Developer, and the guarantee hereby stipulated shall extend to and include, but shall not be limited to, the entire street base, and all pipes, fittings, joints, valves, backfill, and compaction, as well as the working surface, curbs, gutters, sidewalks, and other accessories that are or may be affected by the construction operations. Whenever, in the judgment of the City Engineer, said work shall be in need of repairs, maintenance, or rebuilding, the City Engineer shall cause a written notice to be served upon the Developer or permittee, or both, and the responsible party(s) shall undertake and complete such repairs, maintenance, or rebuilding. If the responsible party(s) fails to do so within 30 days from the date of the service of such notice, the City Engineer may have such repairs made. The cost of such repairs shall be paid by the responsible party(s), together with 10% in addition thereto as damages for failure on the part of the responsible party(s) to make the

repairs. An End of Warranty Inspection shall occur prior to the completion of the warranty period to verify compliance with the above stipulated conditions. After this inspection occurs and if the improvements are found acceptable, ALL constructed improvements shall be accepted by Herriman City, and the remaining 10% of the bond shall be released.

1.02.15 Inspection Notice and Work Hours

Inspection requests for work requiring continuous or periodic inspection shall be made at least 24 hours in advance of starting the work requiring inspection, unless specific written approval is given otherwise.

At least one-week notice shall be given for System Partial Release Inspection, Substantial Completion Inspection, or End of Warranty Inspection. It is critical that all inspection requests are complete and ready for inspection.

Work done by the Contractor which requires inspection beyond the normal working hours of the City (8 am to 5 pm Monday thru Friday), on weekends or City holidays shall be subject to overtime inspection rates charged to the contractor. That is, $75 per hour with a minimum charge of $150. Such requests require at least 48 hours in advance and written approval from the Engineering Department (engineering@herriman.org).

Any construction activities within the City limits shall be restricted to stay within the Allowable Time of Operation (ATO), which is 7:00 am and 9:00 pm Monday through Friday. Prior approval from the Public Works Inspector shall be obtained in order to work outside the ATO.

1.02.16 Record Drawing Requirements

1. Record Drawings shall show the installed location of all appurtenances associated with the culinary water, storm drain, secondary water, street system, irrigation and landscaping, streetlights and any other improvements installed by the developer.
2. Record Drawings shall conform to part 2.01.01 for the electronic file format.
3. Any mark-ups from the field shall be completed using PDF software (scanned, or handwritten mark-ups will not be accepted).
4. The developer will be required to survey all flood control facilities (i.e., surface or subsurface detention or retention ponds) to determine the actual capacity. The developer should submit a statement from their engineer stating the actual volume and its ability to perform in accordance with the approved Drainage Study. This information shall be included in the Record Drawing.

SECTION 2:
SUBMITTAL REQUIREMENTS

CHAPTER 2: SUBMITTAL REQUIREMENTS

This chapter is an outline of Herriman City submittal requirements for final plat and engineering review of subdivisions or site plan projects. Requirements listed herein must be completed for each project/development. The Herriman City Engineer or the Public Works Director shall have authority to modify the requirements of this chapter, in terms of what plans are required, what must be shown on the plans, and what level of detail is needed. Compliance with these requirements must be maintained throughout the project.

2.01 General Requirements

All improvement plans submitted for review and approval by Herriman City shall be designed in accordance with current Engineering practices, comply with all design requirements outlined in *Chapter 3*, and be in accordance with the current Herriman Standard Specifications and Standard Drawings. All plan sets shall meet the requirements listed below and submitted to engineering@herriman.org.

1. A location map shall be included with the plans.
2. An index sheet shall be included with the plans.
3. All drawings shall be drawn with a maximum scale of 1" = 40' on plans and 1" = 10' on profile sheets. Text height shall not be less than 0.06 inches when printed to 11x17 paper (i.e. 0.12 inches at full size).
4. Show a North arrow on all pages of the plan set.
5. Show the scale on all pages of the plan set and on each detail.
6. Show a title block on the lower right-hand corner of all pages within the plan set.
7. Show the date of preparation and any revision dates
8. Elevations shall be referenced to the North America Datum 83, (NAD 83), State Plane Coordinates, Utah Central Zone. No assumed elevations will be acceptable.
9. Show all benchmark locations and elevations (use State Plane Coordinates, Utah Central Zone, NAD 83).
10. Show stationing and elevations for all profiles.
11. Provide details at 1"=10' or other appropriate scale to adequately provide required information.
12. Completely dimension and describe all proposed improvements.
13. All plans shall be stamped, signed, and dated by a Registered Engineer, Architect, Landscape Architect, or Surveyor.
14. Provide project specific general and construction notes throughout the improvement plans.
15. Show details for all proposed structures.

16. Plan sets shall include an emergency contact phone number and name of the developer's responsible person who will be available 24 hours a day, should an emergency situation arise.

2.01.01 **Electronic File Requirements**

The primary format of all submittals shall be pdf format. Drawings shall be submitted as vectored pdf files. That is, scanned files will not be accepted.

2.02 Subdivision Submittal Requirements

Subdivision means any land that is divided, re-subdivided or proposed to be divided into two or more lots, parcels, sites, units, plots, or other division of land for the purpose, whether immediate or future, for offer, sale, lease, or development either on an installment plan or upon any and all other plans, terms, and conditions. Subdivision includes: The division or development of land whether by deed, metes and bounds description, devise and testacy, lease, map plat, or other recorded instrument; and divisions of land for all residential and non-residential uses, including land used or to be used for commercial, agricultural, and industrial. The requirements for both subdivision and master planned subdivision are listed below.

1. Subdivision plat. (2.02.01)
2. Improvement Plans. (2.05)
3. Water Model Report. (2.08)
4. Water Usage Report (2.09)
5. Drainage Study. (2.10)
6. Traffic Impact Study. (2.11)
7. Geotechnical Report. (2.12)
8. Environmental Assessment, if applicable. (2.14)
9. Easements and Agreements. (2.15)
10. Engineer's Opinion of Probable Construction Costs. (2.16)
11. Any bond agreements. (3.08)
12. All other associated studies (geological, hazard studies, etc.), if required.
13. Title report for the subdivided land.
14. All necessary permits. (3.05.01)
15. AutoCAD file of the existing and new property boundaries of the project (projected to Utah State Plane NAD 83 Utah Central Zone, US Survey Feet).

2.02.01 **Subdivision Plat or Plat Amendment**

Subdivision plats shall be designed using the design requirements found in part 4.01. The following information shall be included on all final subdivision plats.

1. The subdivision name, which shall be distinct from any previously approved or recorded plat.
2. A correct metes-and-bounds description of all property included within the plat.
3. Accurately drawn boundaries showing the bearings and dimensions on all boundary lines of the subdivision or project. These lines shall be slightly heavier than the street and lot lines.
4. The boundaries, courses, and dimensions of all property to be subdivided, including any property intended to be used as a street or for another public use, and whether any such area is reserved or proposed for dedication for a public purpose.
5. Every existing and proposed right-of-way and easement, including those for underground facilities as defined in Utah Code 54-8a-2 and for any other utility facilities.
6. True angles and distances to the nearest established street lines or official monument, which are accurately described on the plat and shown by appropriate symbols.
7. Street right-of-way lines and centerline data, together with street widths, names, and coordinate number.
8. The accurate location of all monuments, including all United States, state, county, or other official monuments.
9. The dedication to the public of all streets and highways included in the proposed subdivision, except private streets.
10. Accurate outlines and legal descriptions of any areas to be dedicated or reserved for public use, with the purposes indicated thereon, and of any area to be reserved by deed or covenant for common use by all property owners within the subdivision; and
11. The parent parcel identification number, as shown on the records of the Salt Lake County Recorder.
12. The boundary survey shall be of second order accuracy.
13. A traverse of the exterior boundaries of the tract, and of each block, when computed from field measurements on the ground shall close within a tolerance of one foot to 10,000 feet of perimeter.
14. Elevations shall be referenced to nearest Salt Lake County benchmark.
15. The final plat shall show all survey, mathematical information and data necessary to locate all monuments and to locate and retrace all interior and

exterior boundary lines appearing thereon, including bearing and distance of straight lines, central angles, radius and arc length of curves, and such information as may be necessary to determine the location of the beginning and ending points of curves.

16. Sufficient linear, angular and curve data shall be shown to determine readily the bearing and length of the boundary lines of every block, lot and parcel which is a part thereof.
17. Show the names, widths, lengths, bearings, and curve data on centerlines of the proposed streets, alleys and easements; including bearing and distance of straight lines, and central angle, radius and arc length of the curves; and such information as may be necessary to determine the location of the beginning and ending points of curves.
18. All proposed streets shall be named or numbered in accordance with, and conform to, the adopted street naming and number system of Herriman City and Salt Lake County. (4.01.02)
19. Each lot address, the lot or unit reference, block or building reference, street or site address, street name and coordinate address, acreage or square footage of all parcels, units, or lots, and the dimensions of the blocks and lots intended for sale. The street address shall conform to the number system of Herriman City and Salt Lake County. (4.01.02)
20. Show the adjoining corners of all adjoining subdivisions
21. Identify all adjoining subdivisions by lot and block numbers, subdivision name and place of record or other proper designation.
22. All lots, blocks, and all parcels offered for dedication or any purpose shall be delineated and designated with dimensions, boundaries and courses clearly shown and defined in every case. Parcels offered for dedication, other than for streets or easements, shall be designated by letter.
23. In general, all remnants of lots below minimum size must be added to adjacent lots, rather than allowed to remain as unusable parcels.
24. Provide a dedication description of all lots that will be conveyed by plat to Herriman City.
25. The plat shall show fully and clearly all stakes, monuments and other evidence indicating subdivision boundaries, street intersections and coordinates, individual lot corners and any other monument used in establishment of lines, grades, and curves of the plat.
26. Sheets shall be so arranged that no lot be split between two or more sheets.
27. No ditto marks shall be used for dimensions.
28. The plat shall show the right-of-way lines of each street, the width of any portion being dedicated, and widths of any existing dedications. The widths and locations of adjacent streets and other public properties within 50-feet of

the subdivision shall be shown with dotted lines. If any street in the subdivision is a continuation or an approximate continuation of an existing street, the conformity or the amount of nonconformity of such street to such existing streets shall be accurately shown.

29. Fine dashed lines shall show the sidelines of all easements. The widths of all easements and sufficient ties thereto, to definitely locate the same with respect to the subdivision shall be shown. All easements shall be clearly labeled and identified. All lots shall have easements as required by the Subdivision Ordinance.
30. Pre-existing irrigation system locations shall be shown in the plat. A letter of approval from the Irrigation Company shall also be submitted with the subdivision plans.
31. Plat shall include a statement that each and every owner of any interest in a private roadway shall be jointly and severally responsible for the maintenance and repairs to the roadway. The City shall have no responsibility or liability for the maintenance of or repair to any private roadway.
32. Provide any other requirements required by the County Recorder.
33. Show the location of any 100-year flood plain as designated by the Federal Emergency Management Agency (FEMA).
34. Show all 30% slope clearly labeled as non-buildable area for all projects within the Hillside Overlay Zone.
35. Show the extents of any unmitigated contaminated soils within the plat boundary.
36. Show any land use restrictions due to impacted soils.
37. Show a tabulation table (This table is included in the plat title block template which may be obtained from the Herriman City Engineering Department or it may be downloaded from the Herriman City website at Herriman City Title Block).
38. Signature from all owners of record and the owner's certificate of dedication of all streets, roads, rights-of-way, or other lots or parcels intended for the use and benefit of the general public.
39. Mortgage or trustee signature and consent to record, if applicable.
40. Correct acknowledgement language per Appendix B shall be used.
41. Table summarizing the outdoor water use allocation to each lot and parcel in acre-ft/year.

2.02.02 **Mylar Plat**

All subdivision plats to be recorded shall be plotted on mylar sheets (4 mil). Size of plat sheets shall be 24" x 36" with 1-½ inch border on the left side and ½ inch on all other sides.

The plat shall have all correct information and required signatures. A title report of the property being platted shall accompany the mylar plat submittal. The accompanying title report shall be current within 30 days of the date the mylar plat is submitted to the City. Utility signatures shall be obtained before delivering the plat to the City.

After all bonds and fees have been paid in full, submit plat and title report to the Engineering Department, to collect the City Engineer, City Planning Commission, City Water, City Attorney, Planning Director and City Recorder's signatures. All requirements shall be met before signatures will be collected. Upon approval and after all signatures have been obtained, the mylar plat shall be recorded at the Salt Lake County Recorder's Office by Herriman City.

2.03 Site Plan Submittal Requirements

A Final Site Plan submittal is required for all development projects on a single parcel that have already received prior Preliminary Site Plan approval from the Planning Commission. Site Plan submittal requirements are listed as follows:

1. Title Sheet
2. Improvement plans, as required. (2.05)
3. Water Model Report. (2.08)
4. Drainage Study. (2.10)
5. Traffic Impact Study. (2.11)
6. Geotechnical Report. (2.12)
7. Environmental Assessment, if applicable. (2.14)
8. Easements and Agreements. (2.15)
9. Engineer's Opinion of Probable Construction Costs. (2.16)
10. Any bond agreements. (3.08)
11. All other associated studies (geological, hazard studies, etc.), if required.
12. Title report for the subdivided land.
13. All necessary permits. (3.05.01)
14. AutoCAD file of the existing and new property boundaries of the project (projected to Utah State Plane NAD 83 Utah Central Zone, US Survey Feet).

Sites that are classified as Hillside Development have additional requirements. These requirements are outlined in part 3.07.

2.04 Submittal Requirements

Submit the following as appropriate and necessary to Herriman City for review and approval.

As part of the initial Final Plans submittal:

1. Improvement Plans (2.05)
    a. Title Sheet (2.05.01)
    b. General Notes (2.05.02)
    c. Grading and Drainage Plan (2.05.03)
    d. Utility Plans (2.05.04)
        i. Storm Drain (2.05.04.a)
        ii. Culinary Water (2.05.04.b)
        iii. Secondary Water (2.05.04.c)
    e. Street Improvement Plan (2.05.05)
    f. Signing and Striping Plan (2.05.06)
    g. Street Lighting Plan (2.05.07)
    h. Landscape Planting Plans (2.05.09)
    i. Irrigation Plans (2.05.10)
    j. Wetlands and Environmental Mitigation (2.05.11)
    k. Details and Typical Sections (2.05.12)
    l. Soils Remediation Plan (2.05.13)
2. Phasing Plan (2.06)
3. Long-Term Stormwater Maintenance Agreement and Management Plan (LTSMP) (2.07)
4. Water Model Report (2.08)
5. Water Usage Report (2.09)
6. Drainage Study (2.10)
7. Traffic Impact Study (2.11)
8. Geotechnical Report (2.12)
9. Pavement Structural Section Design Report (2.13)
10. Environmental Assessment (2.14)
11. Easements and Agreements (2.15)

After approval of the Improvement Plans:

1. Engineer's Opinion of Probable Construction Costs (2.16)

Prior to the Pre-Construction Meeting:

1. The applicant shall complete a Pre-Construction Application submitted to engineering@herriman.org. The application requires completion to various pre-construction items including but not limited to, an approved Stormwater Pollution Prevention Plan (SWPPP) (2.17), submittals, and the General Contractor's license from the Department of Public Licensing (DOPL). The Pre-Construction Meeting Application may be downloaded here Pre-Construction Meeting Application

2.05 Improvement Plans

2.05.01 Title Sheet

A title sheet is required for all plans submitted to Herriman City. The title sheet shall be arranged in a visually appealing manner. The title sheet is required to include the following items listed below.

1. Show the name of City on the title sheet.
2. Show the project title of the proposed development.
3. Specify the type and location of work to be constructed within the development.
4. Show the name, address, phone, etc. of the engineer or firm preparing drawings.

2.05.02 General Notes

In addition to any notes as deemed necessary by the engineer, this sheet shall include the Herriman City General Notes for Development Projects which may be downloaded at: General Notes

2.05.03 Grading and Drainage Plan

1. Show general site layout and drainage patterns.
2. Show existing contours at two-foot intervals (maximum). The line type of the existing contours shall be clearly legible but lighter than all proposed improvements.
3. Provide grading topography at two-foot maximum intervals.
4. Show all existing utilities within and adjacent to area proposed for grading. Include actual existing elevations obtained from field survey/pothole where potential conflicts, cover, or clearance requirements exists.
5. Show detention facility details as well as inlets, outlets and piping facilities.
6. Provide calculations to substantiate design within the Drainage Study (include in submittal but not to be included on plans).

7. Show location and details for all long-term water quality features.
8. Show all general, grading, and construction notes.
9. Show the location of existing watercourses, canals, ditches, springs and culverts.
10. Show that runoff from storms that exceed the design storm will flood to the street rather than adjacent development.
11. Provide the requirements from the water right holders or Canal Company for protection of any irrigation ditch or canal system that is to be continued.
12. Provide plans for any irrigation ditch or canal that is to be piped or covered. Include the size, type, slope, spacing of cleanout structures, etc. Also provide approval for all related construction from water right holders, their legal representative, or the Irrigation Company.

2.05.04 **Utility Plans**

At a minimum, the drawings depicting the Storm Drain, Culinary Water, and Secondary Water systems shall include the following information:

2.05.04.a Storm Drain

1. Show plan and profile of the storm drain system and any utility crossings with the anticipated clearances of each utility crossing.
2. Show size, material, length, and slope of all existing and new storm drainpipe.
3. Show type, size, rim elevation, invert elevation(s), top back of curb elevation (for curb inlets), location (i.e. northing and easting or station and offset), and call-out appropriate detail for each storm drain structure.
4. Provide the hydraulic grade line for the 10-year, 24-hour storm event.
5. Provide street cross sections showing the grade of adjacent lots and the anticipated elevation of buildings, including basements.
6. Show all detention (flood control) and retention (water quality) facilities including required detention and retention volumes. Include Water Quality Volume (see the Water Quality Report available at Appendix J Stormwater Quality Report
7. Show long-term stormwater quality features including details needed for construction and design capacity.
8. Show all general and construction notes specific to the project.

2.05.04.b Culinary Water

1. Show plan and profile of the culinary water system and any utility crossings with the anticipated clearances of each utility crossing.
2. Show size, material, and location of all new and existing culinary water mains.
3. Show type, size, location (i.e., northing and easting or station and offset), and call-out appropriate detail for each new culinary water appurtenances, including all valves, hydrants, combination air valves, PRVs, etc.
4. Show and call out all bends. See Chapter 3 for allowable deflection.
5. When development occurs across pressure zones include Pressure Reducing Vault (PRV) stations in the improvement plans. PRV design shall include all necessary details and drawings to construct the entire assembly including but not limited to City Standard Detail(s) and a plan to connection to a power source and the new power meter cabinet (if necessary). Additionally, the upstream and downstream pressures shall be shown (coordinate with Herriman City).
6. Show all backflow prevention devices and provide appropriate details.
7. Show all general and construction notes specific to the project.
8. Show all other requirements required to ensure proper design of the culinary water system within the development.

2.05.04.c Secondary Water

1. Show plan and profile of the secondary water system and any utility crossings with the anticipated clearances of each utility crossing.
2. Show size, material, and location of all new and existing secondary water mains.
3. Show type, size, location (i.e., northing and easting or station and offset), and call-out appropriate detail for each new secondary water appurtenances, including all valves, combination air valves, PRVs, etc.
4. Show and call out all bends. See Chapter 3 for allowable deflection.
5. When development occurs across pressure zones include Pressure Reducing Vault (PRV) stations in the improvement plans. PRV design shall include all necessary details and drawings to construct the entire assembly including but not limited to City Standard Detail(s) and a plan to connection to a power source and the new power meter cabinet (if necessary). Additionally, the upstream and downstream pressures shall be shown (coordinate with Herriman City).
6. Show all general and construction notes specific to the project.
7. Show all other requirements required to ensure proper design of the secondary water system within the development.

2.05.05 **Street Improvement Plan**

1. Show plan and profile for all roadways.
2. Show actual existing elevations obtained from field survey/pothole at potential problem areas for all existing utilities within and adjacent to area proposed for construction.
3. Provide all stationing, top back of curb elevations, centerline elevations, and curve data necessary to construct the proposed roadways within the development (including centerline and curb line curves and for all curb returns at intersections)
4. Show flow direction and type of cross drainage structures at intersections, with adequate flow line elevations.
5. Show typical cross section for all streets according to Herriman City Standards.
6. Provide all details drawn to scale.
7. Provide 100' minimum of existing plan and profile design when connecting to existing improvements.
8. Provide 300’ minimum of future plan and profile design when roadway is to be extended (must also include 300’ of existing profile along future right-of-way lines).
9. Show soil boring log along centerline.
10. Provide vertical curves and information, including “K” values, necessary for the calculation of vertical curves on the road profile.
11. Show utility relocations in the road profile.
12. Show all fencing alignments throughout the development.
13. Show tie-ins to existing roads in the road profile.
14. Provide an asphalt pavement seam design for any road right-of-way over 66'.
15. Show all roadway general and construction notes specific to the project.
16. For streets where the street plan has not been completed at the time the preliminary plan is submitted to the Planning Commission, arterial or collector streets shall be provided as required by the Planning Commission.

2.05.06 **Signing and Striping Plan**

All plans submitted must follow proper standards according to the MUTCD and address at a minimum the following:

1. Intersection Striping
    a. Cross Walks
    b. Stop Bars
    c. Turning Lanes and Turn Arrows

   d. Traffic Lanes
2. Roadway Striping
   a. Roadway Lanes
   b. Shoulders
   c. Tapers
3. Signs
   a. Regulatory
   b. Warning

2.05.07 **Street Lighting Plan**

1. Show the location and type of streetlight.
2. Show the location and gauge of wire, conduit, fuse boxes, splice boxes, meter enclosure, power source, transformer, switchgear boxes, connections, etc.
3. Show the type of copper wire used.
4. Show all existing utilities within and adjacent to the area proposed for construction. This must include actual existing elevations obtained from field survey. Pot holing at locations of potential conflicts, overlaps, or gaps shall be completed in the field survey.
5. Show all lighting general and construction notes specific to the project.
6. Show everything required to ensure proper design of the street light system within the development.
7. All electrical plans must meet National Electrical Code and be stamped by a licensed Electrical Engineer registered in the state of Utah.

2.05.08 **Dry Utility Plan**

1. A Dry Utility Plan is required for all projects with building set backs that are less than 20 ft.
2. May be combined with the Street Lighting Plan
3. Show plan for location of gas, power, and fiber conduit.
4. Show location and size of all power furniture
5. Gas and power shall be located in the Public Utility Easements (PUE)

2.05.09 **Landscape Planting Plans**

1. Provide an overall landscape planting plan for the entire development. This shall include all areas that may be owned or maintained by Herriman City, including, but not limited to, park strips along collector and arterial roadways, detention basin, orphaned park strips, Herriman City parks, etc.
2. If the area/parcel (not ROW property) is owned or will be owned in the future by Herriman City, the required landscape planting plan and the accompanying irrigation plan shall comply with Herriman City standards.

3. All landscape planting plans shall correspond with their proposed irrigation plans to ensure proper integration of planting and irrigation design.
4. The landscape planting plan must show the total system acreage.
5. Plans shall show the location, type, and size of all proposed trees, shrubs, and other vegetation.
6. As part of the landscape planting plan, show the proposed location, manufacturer, type, and (where applicable) model number of all park equipment and facilities, including:

a) Picnic tables.
b) Trash receptacles
c) Park benches.
d) Playground equipment.
e) Any building or other facility.
f) Large landscape rocks and/or boulders (>2' diameter).

7. Show installation details for all park equipment and facilities.
8. All park design shall meet ADA accessibility requirements.
9. Planting plans shall conform as appropriate to the Water Efficiency Standards found in Appendix G of this manual.

2.05.10 Irrigation Plans

1. Provide an irrigation plan for all areas of the development that are or may be owned or maintained in the future by Herriman City.
2. All irrigation system infrastructure must comply with Herriman City standards from the meter to the end of the system.
3. All development projects having private flood control facilities and/or private parks shall have irrigation plans and must be installed in accordance with the pipe sizing chart found in Chapter 6 of this document.
4. Irrigation plans shall show the location and types of all irrigation equipment, including all points of connection, meters, backflow devices, valves (isolation, control, drain, quick coupling), controllers, heads, strainers, filters, etc.
5. Irrigation plans shall conform to the Water Efficiency Standards found in Appendix G of this manual.

2.05.11 Wetlands & Environmental Mitigation

1. Show any existing wetlands.
2. Show the location of the 100-year flood plain as designated by the Federal Emergency Management Agency (FEMA).
3. Show all existing wells. Indicate if the well is to be abandoned or utilized.
4. Show all general and construction notes specific to the project.

2.05.12 **Details and Typical Sections**

References to APWA or Herriman City Standard Drawings, Plans, or typical sections shall be attached and included in the Improvement Plans. The latest edition of any such detail shall be used. Herriman City Standard Drawings are found in Chapter 5 of this document. APWA Standard Plans may be acquired at http://utah.apwa.net.

1. ADA Compliant Pedestrian Ramps
   a. Provide spot elevations at all points and slopes on all surfaces necessary for proper construction.
2. Show the location, size, and type of all pipe proposed.
3. Show all nozzle sizes proposed.
4. Provide separate irrigation circuits to irrigate trees independently from other vegetation types.
5. In areas where both secondary water and culinary water are available for irrigation use, the plans must show cross connection details which will prevent the possibility of contamination of the culinary water system. A clear separation between the two systems is required. Shut off valves alone will not be sufficient.

2.05.13 **Soils Remediation Plan**

Items necessary for this plan are detailed in the *Development of the Contamination Procedures*. This document may be obtained from the Herriman City Engineering Department or it may be obtained the Herriman City website at:
Development of Contaminated Properties

2.06 Phasing Plan

A phasing plan shall be required if a project has more than one phase for the project. The Phasing Plan shall clearly label and indicate the current phase, prior phases, future phases, and the overall boundary of the entire project.

2.07 Long-Term Stormwater Maintenance Agreement and Management Plan (LTSMP)

All developments that include construction of private stormwater improvements, except for the construction of a single-family home with its associated on-site improvements, must enter into a Stormwater Maintenance Agreement.

At a minimum, this plan shall provide the following:

1. Inventory of all post-construction stormwater controls, both for flood control and water quality.

2. Description of the routine maintenance required for each control.
3. Schedule for maintenance of each control.
4. Inspection requirements for each control.
5. A plan (map of the site) that shows the post-construction stormwater controls (both flood and water quality) and refers to their best management practices (BMPs) or other maintenance instructions.
6. Long-Term Stormwater Maintenance Agreement. This is a separate document that needs to accompany the LTSMP. A template may be obtained from the Herriman City Stormwater webpage or can be downloaded directly at: LTSWMA .

2.08 Water Model Report

The State Division of Drinking Water (DDW) Hydraulic Modeling Rule, each new water system shall be hydraulically modeled to ensure that it will meet the minimum requirements set forth by the State. The Water Model Report will be completed by Herriman City based on the updated and approved city-wide model.

It is the responsibility of the applicant to provide all necessary information to the City, or its representative, in order to complete the water model in accordance with Appendix N - Hydraulic Modeling Review Checklist.

2.09 Water Usage Report

All development projects are required to provide a Water Usage Report to Herriman City as part of the submittal process. The report will be submitted to Jordan Valley Water Conservancy District (JVWCD) for their review. This report shall include a completed copy of the Water Demand Summary Form in Appendix K.

2.10 Drainage Study

All projects require a Drainage Study unless otherwise indicated by the City Engineer. At a minimum, the Drainage Study shall be comprised of two sections, a Flood Control section and a Water Quality section. The Flood Control section shall include the following:

1. Flood Control
    a. Project title sheet including the project name, address, date, and preparer's name, and PE stamp.
    b. Description of the New Drainage Plan including, but not limited to, a general description of how the project plans to address offsite and onsite drainage.

c. Description of the hydrologic and hydraulic methodologies and parameters used to determine the design flow and volume of all new storm drain pipes and detention/retention facilities respectively and for all other storm drain components pertinent to the project.
d. Implement results of the water quality analysis related to retention and off-site discharge in the hydraulic calculations.
e. Describe how the proposed storm drain infrastructure is sized adequately in accordance with part 4.10, at a minimum.
f. If the project has multiple phases, the Drainage Study of the entire project shall be provided as part of the submittal package of the first phase. An updated Drainage Study or an amendment to the original Drainage Study shall be submitted with every phase thereafter.
g. Provide a summary of modeling results and conclusion.
h. Provide an exhibit depicting the existing and proposed extent of the FEMA floodplain (if applicable).
i. All final documents substantiating a change in the FEMA floodplain shall be included in the appendix to the Drainage Study, including, but not limited to, an approved Conditional Letter of Map Revision (CLOMR), if applicable.
j. Provide an exhibit(s) showing sub basin delineation and all hydrologic elements of the model including, but not limited to, reaches (pipes, channels, etc.), junctions (points of concentration), and detention basin facilities.
k. If any type of retention or infiltration is proposed, the method for determining infiltration rates shall be provided in the appendix. Include and provide safety factors related to infiltration.
l. Evaluate and describe potential impacts of saturation on slopes, buildings, retaining walls, structures, etc.
m. Provide the updated Storm Drain Improvement Plans as an appendix to the Drainage Study.
n. Provide all supporting calculations for all storm drain infrastructure sizing.

2. The Water Quality section shall include the following:
   a. Project title sheet including the project name, address, date, and preparer's name, and PE stamp.
   b. Name of the receiving waters
   c. Any known impairments (Use the State's Interactive Water Quality Map to help identify, https://wq.deq.utah.gov/)
   d. Any approved TMDLs

e. A description of the project including anticipated area of land disturbance (acres), impervious area (acres), percent imperviousness (%), runoff coefficient, Water Quality Volume (WQV, 80th percentile storm runoff volume).
f. General soils and groundwater information including general soils classification for existing soils (NRCS hydrologic soils grouping as a minimum), depth to existing groundwater, date when this level was determined, and infiltration rate and how it was determined.
g. A description/summary of how the WQV will be handled on the site.
h. How much of the WQV will be retained on site (%)?
i. If not retaining 100% of WQV, explain why more could not be retained.
j. A description of all water quality measures being taken to address the remaining WQV.
k. A template may be used for the Water Quality Report. A template is included in Appendix J.

2.11 Traffic Impact Study

A Traffic Impact Study (TIS) may be required for a development that generates 100 or more new peak hour trips or as required by the City Engineer. At a minimum, the TIS shall include the following:

1. Project title sheet including the project name, address, date, and preparer's name, PE stamp, and the contact person representing the developer.
2. Introduction shall include a description of the proposed project, a map of the project, a site plan, the study area for the entire project, a phasing plan, and references to other relevant traffic studies.
3. If the project has multiple phases, the TIS for the entire project shall be provided as part of the submittal package of the first phase. An updated TIS or an amendment to the original study shall be submitted with every phase thereafter.
4. Description of the analysis including a clear statement of assumptions, methodologies and parameters used to determine:
    a. Existing background information for weekday A.M. and P.M. peak hour traffic volumes (including turning movements).
    b. Non-Site Traffic Forecast. That is, the projected traffic volume at full build for of all other existing developments within the study area, excluding the proposed development.
    c. Site Traffic Generation. This shall be based on the latest edition of the Institute of Transportation Engineer's (ITE) Trip Generation Manual.

d. Site Generated Traffic Distribution and Assignment. Distribution assignment methodology shall be recognized by the ITE. A Trip Distribution diagram shall be included.

5. The analysis shall address items specific and relevant to the project including but not limited to Level of Service (LOS) for all intersections and access points for each analysis, LOS for critical links, left turn warrants, signal warrants, sight distance, queue length, impacts to other transportation modes (i.e. bicycle, pedestrian, safe school walking routes, and transit), signal progression, acceleration/deceleration lanes, Transportation Demand Management (TDM) measures, geometrics, internal circulation and stacking, driveway conflicts, and other project specific items as identified by the consultant or the City Engineer.
6. Results shall include LOS for all intersections and access points, existing AM/PM peak hour traffic volumes, existing AM/PM peak hour traffic volumes including site generated traffic, and future peak hour traffic volumes without site traffic. A LOS results table for each scenario shall be included.
7. Conclusions and Recommendations shall be included and shall include mitigation measures for all system deficiencies identified in the analysis and the results.

2.12 Geotechnical Report

All projects require a Geotechnical Report unless otherwise indicated by the City Engineer. At a minimum, the Geotechnical Study shall include the following:

1. Project title sheet including the project name, address, date, and preparer's name, PE stamp and signature by a licensed geotechnical engineer in the state of Utah, and the contact person representing the developer.
2. Introduction shall include a clear scope and objective of the study, a description of the project, a project map, and a vicinity map.
3. Describe the existing conditions of the project site including but not limited to the terrain, seismic history, geological history, surface drainage conditions, groundwater conditions or hazards that present risk or burden to construction or longevity of the project, an estimate of the normal highest elevation of the seasonal high-water table, soils classification for the major layers of the soil profile, CBR and bearing capacity, settlement potential, shrink/swell potential, soils resistivity
4. Evaluate and make recommendations related to potential impacts of saturated soil and the suitability of the soils for infiltration of stormwater. Consider depth to bedrock, geological hazards, shallow groundwater, potential for

landslides, slope stability, retaining wall stability, longevity of effective infiltration, and any other item deemed important by the consultant or the City Engineer.

5. The percolation rate may be estimated based on site observations of the hydrologic soils group, or a site-specific infiltration rate of in-situ soils may be obtained by conducting hydraulic conductivity testing according to ASTM D5856.
6. Description of the test borings and an accompanying map of each bore superimposed over the project site map.
7. At a minimum, the report shall include recommendations on soil suitability specific to the project, lateral earth design pressures on retaining walls or basement walls (if applicable), foundation design recommendations, use and treatment of in-situ materials for use as engineering fill, mitigation measures for any identified expansive soils, compaction and construction requirements for project improvements.
8. The report shall provide the data required by pavement structural design as specified in the design variables portion of the Pavement Structural Section Design in Chapter 4.
9. Provide recommendations as to the requirements for land drains to adequately collect groundwater which could adversely affect development.
10. Provide recommendations regarding cut and fill slope limitations.
11. Provide compaction recommendations.

2.13 Pavement Structural Section Design Report

Submit a pavement structural design report for all new asphalt roads or roadway improvement projects. Prepare the report in accordance with the requirements and criteria outlined in Pavement Structural Section Design in Chapter 4 (4.03).

2.14 Environmental Assessment

Items necessary for this deliverable are detailed in the *Development of Contaminated Properties*. This document may be obtained from the Herriman City Engineering Department or it may be obtained at: Development of Contaminated Properties

2.15 Easements and Agreements

Easements shall be labeled as to whom they are granted and for what purpose. They may be shown on plats, but if they are outside of a plat boundary or being recorded without a plat, they must include a written description and accompanying map. Provide copies of recorded easements and agreements between private property owners to document

that a property owner has the perpetual right to use another's property perpetually to satisfy the city's development obligations. When a property owner's infrastructure goes through another's property, easement and agreement documents must establish who is responsible for maintenance of the infrastructure. See part 3.04 for all easement requirements.

2.16 Engineer's Opinion of Probable Construction Cost

After approval of the final improvement drawings submit an engineer's opinion of probable cost of improvements, including temporary and permanent stormwater pollution prevention controls, and landscape of public property, including parkstrips, detention basins, open space and parks. This is to contain an itemized list of quantities and unit prices. It is used by the City Engineer in establishing the Improvement Completion Assurance bond amount.

2.17 Stormwater Pollution Prevention Plan (SWPPP)

All projects disturbing one acre or more of land, or that disturb less than one acre of land but are part of a larger common plan of development or sale that will ultimately disturb one acre or more of land, require a SWPPP (Storm Water UPDES Permits SWPPP CGP Template) and a UPDES permit from the State of Utah (Stormwater UPDES Permit). All SWPPPs must comply with the requirements of UPDES Construction General Permit Number UTRC00000 or UPDES Common Plan Permit UTRH00000, whichever is applicable.

SWPPP submittals must contain the following:

1. SWPPP checklist (see SWPPP Review Checklist)
2. All of the items on the SWPPP checklist
3. Evidence of having filed for coverage under the UPDES Construction General Permit.
4. Provide calculations to substantiate design (include in submittal but not to be included on plans).

SECTION 3:
LAND DEVELOPMENT REQUIREMENTS

CHAPTER 3: LAND DEVELOPMENT REQUIREMENTS

3.01 Responsibility for Infrastructure

The developer is responsible for the cost of design and construction of public or private infrastructure to support the development.

The developer must construct full street and utility improvements. This includes, but not limited to, asphalt and base materials, curb and gutter, sidewalk, traffic and street signs, streetlights, sewer, storm drainage, culinary water, and in some cases street landscaping. The developer must also provide utilities for the local service providers regulated by the Utah Public Service Commission (voice/data, gas, power) according to the local provider requirements.

The developer is required to dedicate land for public improvements to the public. Where public utilities are on private land, the developer must provide easements and agreements as noted below.

The developer is responsible for improvements of the size listed below, and larger if required to meet the needs of the development.

Improvement System	Minimum Size for Which Developer is Responsible	Basis to Determine the Development's Needs
Street	60 ft ROW[(a)]	Traffic Impact Study
Sanitary Sewer	Per SVSD Requirements	Per SVSD Requirements
Storm Drain	18"	Drainage Study
Culinary Water	8"	Water Model Report

Additional ROW required for right pocket turn lane at intersections where a minor collector meets another collector or arterial road.

When infrastructure is identified in an adopted Impact Fee Facilities Plan as a system improvement and impact fees are collected for it, the growth resulting from the development pays for the infrastructure though impact fees.

If the City requests that the developer install infrastructure larger than the minimum requirement and larger than what is needed to serve the development, the City will reimburse the developer for documented, actual incremental difference in cost of improvements.

The developer shall document how improvements were constructed and provide record drawings showing differences between the improvement plans and how improvements

were installed. Documenting how improvements were installed may include surveying constructed improvements in some cases, such as detention and retention basins or improvements not constructed as designed.

3.02 Public vs. Private Infrastructure

While most infrastructure installed to serve a development is public, some of it is private, meaning that it is owned and maintained by private individuals or organizations. The following describes how public and private utilities are delineated.

1. **Culinary & Secondary Water**
   The water meter is the point of delineation between ownership. That is, all water infrastructure downstream of the water meter is privately owned and maintained. All infrastructure upstream and including the meter is publicly owned and maintained. Public water infrastructure installed on private property shall be installed within a utility easement as outlined in part 3.04.

   Dedicated fire lines or fire loops that are required for a development project do not need a water meter but shall be privately owned and maintained. The delineation between private and public ownership for such cases is at the right-of-way line. The developer and/or property owner shall enter into a Private Water Maintenance Agreement with the city in such cases. The domestic service line for such uses shall be metered and connected to the public water line.

   All multi-family development projects shall be master metered. See part 4.14.07 for more information regarding master meters.

2. **Pressure Irrigation**
   Pressure irrigation service lines between the main line and the meter box are public. Secondary water service lines beyond the meter box are private and shall be owned and maintained by the property owner.

3. **Sanitary Sewer**
   Per Jordan Basin Improvement District (JBID) requirements.

4. **Storm Drain**
   Storm drain lines are private until they connect to the public main line or a public extension of the public storm drainage system (such as an inlet box in a public street). Drainage systems associated with private roads shall be owned by the

private road owner, who shall be responsible for operating and maintaining the system.

5. **Streetlights**
Streetlights on public streets are public. Streetlights on private streets or private property are private.

6. **Traffic Signals**
For projects that include traffic signals, all external steel parts, including but not limited to, bases, masts poles, supports and arms shall be powder coated satin black.

3.03 Obligation to Provide Secondary Water

1. Commercial developments are required to connect to secondary water system if 1) the site landscaping plan greater than or equal to 1,500 square feet of sod, and 2) if the public secondary water system is adjacent to the site.

3.04 Easements & Agreements

All required easements and agreements shall follow the requirements listed below.

1. Easements for culinary water, sewer, power, irrigation water, stormwater drainage, wetlands, and/or other utilities or purposes shall be provided by the Developer and designated on the improvement plans and final plat or separate document as required to accommodate the utility systems in the development. A recorded maintenance agreement shall establish maintenance responsibility. Where natural drainage channels, interceptor systems, flood hazard or sensitive area overlay zones cross the development, the developer must obtain the necessary permits to modify such drainage facilities, and designate the channels, systems, or flood hazard zones, and any associated restrictions, on the plat as well as provide the necessary easement dedication.

2. Easements shall be a minimum of 10 feet around installed infrastructure. For a typical utility line, this is interpreted as being 20 feet in width with the utility line centered within the easement. Wider easements may be required when pipeline depths are greater than the standard and must be approved by the City Engineer. No buildings, utilities, or structures shall be erected or constructed within such easements as to interfere with the activities necessary to properly access and maintain or replace such infrastructure.

3. Water and stormwater alignments shall be designed and installed such that the utility shall avoid crossing or encroaching onto private property wherever technically feasible. However, should an easement be necessary to cross private property, the easement shall not straddle the property line but rather encumber one property wherever possible.

4. Easements and area descriptions shall be of sufficient width to completely identify and provide for access and maintenance of the utility or identified restricted area.

5. Easements to be dedicated to Herriman City which are not shown and described on the dedication plat shall be submitted to the City Engineer on forms provided by the City. Said easements shall be conveyed by deed, and shall include, by attachment, a drawing of the easement being dedicated and a complete legal description of the easement.

6. Under no circumstance shall permits be issued or construction allowed without the proper easements in place to accomplish the work.

7. Should easements become necessary to cross private property to permit drainage or utility access of the development, it shall be the responsibility of the developer to acquire such easements at no cost to the City and convey them by subdivision plat or deed to Herriman City, the HOA, or other party responsible for operation and maintenance.

8. Both legal and physical accesses are required to all manholes, cleanouts, valves, or other structures requiring periodic maintenance. Physical access shall consist of all-weather surfaces sufficient to allow all routine maintenance and repair equipment.

9. New developments shall maintain natural drainage channels.

10. All developments along County Flood Control Facilities, i.e., Midas Creek, Copper Creek, Butterfield Creek, Rose Creek, Wood Hollow, and any other drainages maintained by Salt Lake County shall be subdivided such that no new lots or properties shall be within 20 feet of the top of bank as established by Salt Lake County.

11. All new lots shall convey 10 foot wide Public Utility Easements (PUE) along all sides of the lot that front a roadway.

12. Drainage easements shall be established as determined necessary by the City Engineer.

3.05 Engineering Permits

All applicable permits shall be obtained by the developer.

3.05.01 Permits Required Before Final Plan Approval

The permits listed below are required before final approval of plans.

1. Federal Permits:
    a. FEMA Letter of Map Amendment (LOMA)/Letter of Map Revision (LOMR-F)

2. State Permits:
    a. Utah State Dam Safety Permit
    b. UDOT Road Permits
    c. Stream Alteration Permit

3. County Permit:
    a. Flood Control Permit

4. Miscellaneous Permits as applicable:
    a. Access Permits over Kern River Natural Gas Pipeline
    b. Access Permits over irrigation canals
    c. Access to Public Lands

3.05.02 Permits Required Before Construction

The permits listed below are required before construction can begin.

1. State Permits:
    a. UPDES Permit
    b. Division of Air Quality Fugitive Dust Control Plan
    c. UDOT Encroachment Permit

2. County Permits:
    a. Salt Lake County Surveyor's Monument Preservation Permit

3. City Permits:
    a. A Land Disturbance Permit is required for any land disturbance, including grading of lots larger than 1 acre, or which disturbs less than

one acre land and are part of a larger common plan of development or sale that disturbs one acre or more of land, any work within city right-of-way, or to move a water meter for driveway installations.
The Land Disturbance Permit may be filled out or downloaded at Appendix E or Land Disturbance Permit
Floodplain Development Permit. Required whenever a development boundary overlaps or is adjacent to a FEMA designated Special Flood Hazard Area. It may be downloaded here: Appendix I.

3.06 Stormwater Management

The developer, or designee shall be responsible for stormwater management during construction and perpetually after construction. During construction this is primarily related to stormwater pollution prevention; after construction it also includes both pollution prevention and controlling runoff for flood control purposes.

3.06.01 Stormwater Pollution Prevention During Construction

After final approval and prior to the Pre-Construction Meeting, a Stormwater Pollution Prevention Plan (SWPPP) must be prepared and submitted for approval, as applicable. The developer shall comply with State and local stormwater pollution prevention requirements. For developments that disturb one acre or more of soil, this includes the following (see SWPPP submittal requirements in part 2.17).

1. Preparing a Stormwater Pollution Prevention Plan (SWPPP) in order to prevent or minimize the discharge of pollutants to the City storm drain system, onto adjacent properties, or into natural drainage areas
2. Submitting the SWPPP with a corresponding submittal checklist to the City for review
3. File to the Utah Division of Water Quality for coverage under the Utah Pollutant Discharge Elimination Permit (UPDES) Construction General Permit. Submitting a Notice of Intent (NOI) to the Utah Division of Water Quality
4. Comply with the terms of the UPDES Construction General Permit from the Utah Division of Water Quality and receiving a Letter of Authorization from the State
5. Following the SWPPP during construction
6. Performing inspections, maintaining and making modifications to the pollution prevention measures as needed
7. Filing a Notice of Termination (NOT) with the Utah Division of Water Quality after construction and soil stabilization are complete

3.06.02 **Stormwater Pollution Prevention After Construction**

1. A Long-term Stormwater Management Plan and Maintenance Agreement is required on new development and redevelopment sites (except single-family residential lots) that disturb greater than or equal to one acre, including projects less than one acre that are part of a larger common plan of development or sale which disturb land greater than or equal to one acre. The Long Term Stormwater Maintenance Agreement shall be executed and recorded prior to issuance of substantial completion of the project.
2. The Long-term Stormwater Management Plan identifies stormwater pollution prevention controls and activities perpetually conducted by the owner or operator of the site
3. The Long-term Stormwater Maintenance Agreement requires that the property owner establish stormwater controls, perpetually operate and maintain them, and conduct annual inspections. It also allows the City to conduct oversight inspections and perform necessary maintenance and corrective actions neglected by the property owner.

3.06.03 **Controlling Runoff for Flood Control**

The developer is required to control the quantity and flowrate of stormwater runoff from the site, as well as mitigate storm water running onto the site from upstream adjacent properties This protects adjacent properties and downstream land from flooding and limits the required capacity of downstream storm drainage facilities. This is typically accomplished through detaining stormwater and through site design that controls where overflowing runoff leaves the site.

3.07 Hillside Development

See the Hillside Overlay Zone Ordinance for additional development requirements for all areas that are within the Hillside Overlay Zone.

3.08 Improvement Bonds

The developer is required to post an Improvement Completion Assurance Bond and an Improvement Warranty Bond with Herriman assuring the City that required improvements will be completed and warranted according to City Specifications.

The Improvement Completion Assurance Bond is in an amount of 100% of the estimated costs of completing the improvements that have not already been accepted. The Improvement Completion Assurance Bond is released as improvements are accepted.

Developers must post an Improvement Warranty Bond in the amount of 10% of the estimated or actual cost of completing the improvements. The Improvement Warranty Bond is released one year after all improvements are accepted (provided it isn't needed to correct defective or failing improvements).

See below for the types of acceptable bonds.

1. **Escrow.** A special account with a local bank in which the bank agrees to hold the funds until the City directs them to release it.

2. **Cashier's Check.** Only a cashier's check will be accepted (no company checks or personal checks). The City will deposit the check into a special account and hold it until the project is complete. If no request has been made within three years, all proceeds become property of Herriman City.

3. **Letter of Credit.** A Letter of Credit shall include a letter of credit agreement and an irrevocable stand-by letter of credit with a federally insured bank or credit union. If the bank or the credit union is located outside of the state of Utah and/or requires presentment of the sight draft outside of the state of Utah, additional language shall be provided in the letter of credit agreement allowing for presentment by means acceptable to the city.

Please note, only Herriman City forms will be accepted. Copies of the bond agreements may be found in Appendix A or downloaded from Herriman City's Engineering website at https://www.herriman.org/development-info. The Bond Coordinator must be informed of which form of agreement will be used. All bond release inspection requests must be in writing via email to engineering@herriman.org; telephone requests will not be accepted. Release of the bond will NOT be initiated until this step is taken. Should your project fail the initial bond release inspection, you will be required to pay a re-inspection fee, along with your re-inspection request. Please note that in the event that the City is requested to hold the plat for final signature and approval until all fees and bonds have been received, the requesting party will be responsible to pay all costs and fees associated with this request.

If you have any questions, please contact:

Herriman City
5355 West Herriman Main Street
Herriman, UT 84096
801.446.5323

3.09 City Fees

Fees associated with the development are required to be paid prior to obtaining signatures on the plat and prior to holding a pre-construction meeting. Fees are adopted by City Council and any additional information regarding the amount and which fees apply to the project may be directed to the engineering department Bond Coordinator. The following fees may apply:

- Bond Processing Fee
- Engineering Review Fee
- Water Modeling Fee
- Water Connection Fee (as it applies to the project)
- Water Impact Fee (as it applies to the project)
- Water Right Impact Fee (as it applies to the project)
- Secondary Water Impact Fee (as it applies to the project)
- Storm Drain Impact Fee
- Any Fee in Lieu of Required Infrastructure Improvements
- Traffic and Park Impact Fees will be assessed at Building Permit Application

3.10 Other Financial Obligations

The developer is responsible for removing temporary infrastructure or providing funding for Herriman City to remove temporary infrastructure in the future. Examples might include, but would not be limited to, things such as the following:

1. Removing temporary turnarounds
2. Abandoning easements associated with temporary turnarounds
3. Construction of curb, gutter and sidewalk through an area occupied by a temporary turnaround
4. Temporary utility infrastructure

3.11 Developer Obligation to Hire Qualified Contractor(s)

The developer shall be required to hire a contractor who has an active license with the Utah State Department of Occupational Licensing (DOPL). Both the General Contractor and the sub-contractor performing utility installation (if a separate contractor) shall have either or both B100 or E100 licensing. Developer's contractor shall provide proof of licensing prior to scheduling the pre-construction meeting.

3.12 Developer Obligation to Meet Jordan Valley Water Conservancy District Water Budget.

All development projects shall provide a Water Usage Report that indicates its total water usage rate is equal to, or less than 1.35 ac-ft/ac/year. Otherwise, the developer shall either provide additional water or purchase additional water rights, enough to meet the water budget. See Section 2.09 for additional information regarding the Water Usage Report.

3.13 Developer Obligation to Provide U.S. Postal Service Accommodation

Developer is responsible to work with the local post office to establish a location for mailboxes and installing the same. Individual mailboxes are not allowed by USPS, therefore cluster box units or similar will be required. See Appendix C - *USPS Placement of Mailboxes.*

SECTION 4:
ENGINEERING REQUIREMENTS

CHAPTER 4: ENGINEERING REQUIREMENTS

This chapter outlines engineering requirements that will be required by developments and the developer's engineer. All submitted plans shall meet, at a minimum, the criteria provided and meet the engineering standard of care. The City Engineer may modify these requirements when it is justified.

4.01 Subdivision Plat

The following instructions are for the purpose of standardizing the preparation of plat drawings to obtain uniformity in appearance, clarity, size, and style.

4.01.01 **Title Block.**

The first sheet of the plat, below the title, shall show the name of the licensed land surveyor, together with the date of the survey, the scale of the map and the number of the sheets. The acknowledgements in Appendix B and the title block that is available in CAD online should be used.

4.01.02 **Addressing.**

The Developers and Engineer/Surveyor will provide addressing on the plat according to the City's Master Address Grid. The requirements for addressing in Herriman City are listed below.

1. Follow Salt Lake County naming standards.
2. All streets running North to South or East to West shall be assigned a numeric coordinate (i.e., 13100 South) and name. Streets that end in "00" or that are short segments do not require a name.
3. Streets that backtrack, loop or are longer than 600 feet and curve more than 30 degrees from original heading shall be assigned at least two separate names. Names of streets will not be allowed to continue in more than one bearing (either due North to South or due East to West, but not both).
4. Shallow street circles or street bubbles shall be addressed as part of the main street if there is not one lot on both sides of the circle before the radius point, otherwise all circles shall have a separate name.
5. All street names will be verified and approved by the County before assigned in order to avoid duplication. An approval letter from the County is required for street name authorization.
6. All addresses will be accepted by the City with respect to the front of the building. This means that corner lots will have two addresses until the building permit is issued at which time one of these addresses will become the permanent address.

7. In order to avoid confusion, house numbers of homes on parallel or adjacent streets shall not coincide.
8. Proposed street names that sound very similar to existing names or street names that have unconventional spellings shall be avoided.
9. Proposed street names are encouraged to have the following characteristics:
    a. Historic significance.
    b. Local color and sense of place.
    c. Overall theme.
    d. Compatibility with adjacent streets.
10. Proposed street names shall not be longer than 13 letters and spaces so they may be legible on a standard City street sign.
11. To minimize confusion, the following type of proposed streets shall be named:
    a. Streets that change direction.
    b. Loop or horseshoe streets.
    c. Streets that have intersection coordinate changes.
    d. Cul-de-sacs.
    e. Dead-end streets that will likely be extended into one of the above street types.
12. Proposed street names and street types should be matched as follows:
    a. Boulevard, Parkway – arterial.
    b. Drive, Road – streets longer than 1,000 feet.
    c. Way – curvilinear streets longer than 1,000 feet.
    d. Street, Avenues – straight directional streets.
    e. Lanes – short secondary connecting streets.
    f. Circle, Court, Place, Cove – cul-de-sacs and dead-end streets.
13. No home or building address shall end in a number zero or five.
14. All numeric coordinates are required at all road intersection and dead-ends and should only end in a zero or five.

4.02 Traffic Impact Study Guidelines

A traffic impact study may be required on developments that generate 100 or more new peak hour trips or as determined by the City Engineer. The guidelines for all traffic impact studies conducted within Herriman City are discussed below.

4.02.01 **Introduction.**

New land developments, expansions of existing developments, and proposed changes in developments (redevelopments) can have a significant impact on the transportation system if there is not adequate planning and consideration of necessary improvements. To ensure that Herriman City can accommodate a proposed

development, a Traffic Impact Study (TIS) is required to analyze relevant impact issues. The purpose of this document is to establish uniform guidelines for when a TIS is required and how the study is to be conducted, based on criteria established by the *Institute of Transportation Engineers* (ITE).

4.02.02 **General Requirements.**

A TIS is a specialized study of the impacts that a certain development will have on the surrounding transportation system. The study will analyze all transportation modes, but is specifically concerned with the generation, distribution, and assignment of traffic to and from the proposed development. The impact analysis area will generally be larger than the immediate site. A TIS shall be required for all developments which generate 100 or more new peak hour trips, or which will have a significant impact on the City's transportation system as determined by the City Engineer. Further, the TIS shall follow the Report Outline provided herein and shall bear the stamp of a Civil or Traffic Engineer registered in the State of Utah. It will be critical for the Engineer performing the study to regularly consult and coordinate with the City Engineer. At least one meeting between the City Engineer and the Engineer who performed the study will be required to review traffic impacts. Additional meetings will be required at the City Engineer's discretion. The developer will be responsible for hiring the engineer to perform the TIS.

4.02.03 **Existing Background Information.**

The Developer's Engineer needs to obtain weekday A.M. and P.M. peak hour traffic counts at key locations in the vicinity of the proposed project. These counts need to show turning volumes as well as through movement. Turning movement counts may be required during other periods (e.g., Saturday Peak Hour) as directed by the City. The traffic volumes can either be obtained by traffic recorders (i.e., manual, pneumatic) or by using existing traffic counts which are not more than one year old. Traffic volumes for some areas can be obtained from Herriman City. Requests for volumes should be coordinated through the City Engineer. When directed by the City, the traffic volumes for the analysis hours should then be adjusted for the peak season, in cases where seasonal traffic data is available. Herriman City requires that the TIS contain a table including the A.M. and P.M. peak hours at all intersections and accesses which are included in the study area.

Data regarding roadway and intersection geometrics, and traffic control devices should also be collected within the study area and provided in the TIS.

4.02.04 **Non-Site Traffic Forecast.**

When the existing peak hour traffic has been identified and developed, then the future year background traffic volumes can be developed. This traffic is the non-site traffic

which consists of the existing ADT and the generated traffic of all other existing developments in the area. There are many different methods for calculating the background traffic. One method is to use travel demand models of the area. A notable model is provided by the Wasatch Front Regional Council. Another method available is to use growth rates or trends. Growth projections for future years must be based on documented historical data for the study area. The method which is chosen by the consultant to develop the background traffic needs to be approved by the City Engineer. In addition to the existing traffic growth projections, traffic increase due to other developments shall be required. These developments consist of the planned and anticipated developments which are in the area. In addition, some assumptions for development of other vacant lands in the vicinity of the project need to be identified and included in the total background non-site traffic. This additional traffic is important in areas where developmental growth may not be represented sufficiently in the traditional growth trends. The City Engineer should be consulted to determine requirements for assessing other development in the TIS report.

4.02.05 **Site Traffic Generation.**

The latest edition of ITE's *Trip Generation* Manual should be used for selecting trip generation rates. Other rates may be used with the approval of the City in cases where *Trip Generation* does not include trip rates for a specific land use category, or includes only limited data, or where local trip rates have been shown to differ from the ITE rates. Site traffic should be generated for daily, A.M., and P.M. peak hour periods. Internal Capture and pass-by trip reductions may be allowed in some cases, but the final assumption for trip reductions and any other adjustments must be reviewed and accepted by the City Engineer. A trip generation table should be prepared by phase showing proposed land use, trip rates, and vehicle trips for daily and peak hour periods and appropriate traffic volume adjustments, if applicable.

4.02.06 **Site Generated Traffic Distribution and Assignment.**

The project generated traffic needs to be assigned and distributed onto the existing street network in order to accurately analyze the effects of the proposed development or land use change. Any of the distribution and assignment methods recognized by ITE are acceptable. A Trip Distribution diagram is required in the TIS report.

Trip assignments can be developed with computer models or by manual calculations. All assignment assumptions must be agreed to by the City Engineer and reflect the distribution pattern developed.

4.02.07 **Traffic Flow Diagrams.**

All intersections which are in the study area, and all accesses to the proposed development or land use change require a traffic flow diagram. Diagrams showing

generated trips, background traffic, and the combined volumes of both background and generated traffic are necessary for each intersection/access for each analysis year. This includes both through movements as well as turning volumes.

4.02.08 **Impact Analysis Area.**

The study area needs to include all streets which serve the proposed development or land use change. In general, any links that will experience a directional increase of 25 vehicles in the peak hour should be included in the study. However, the City Engineer may enlarge or reduce the study area based on project type, size, or other special conditions.

4.02.09 **Time Period, Study Horizon Years, and Traffic Scenarios.**

Both the A.M and P.M. peak hour periods must be analyzed with and without the addition of each proposed project phase. The study horizon should include the current year (to model existing conditions), year(s) of completion of a major phase or build-out, and a future date of 5 to10 years beyond build-out. Both a build and a no-build alternative should be analyzed for each year. The current year only needs the no-build analysis. Further, an analysis of the proposed project with TIS mitigation measures should be made when a level-of-service (LOS) E is encountered from existing (and/or future) plus project traffic at any location within the study area. If LOS D occurs, it must be identified and may require mitigation as determined by the City Engineer. Moreover, the improvements assumed by the traffic engineer for analysis must be approved by the City Engineer. The City Engineer must also approve of all traffic scenarios that will be analyzed before a TIS can be submitted and may dictate which horizon years are appropriate for study. The table below is a list of study horizons that should be used determined by project type and size.

Analysis Category	Development Characteristic	Study Horizons	Minimum Study Area
I	Small Development	1. Opening Year	1. Site Access Drives
	100-499 peak hour trips	2. 5 years after Opening	2. Adjacent signal-controlled intersections within 1/4 mile and/or major street intersections without control and driveways within 500 feet

Analysis Category	Development Characteristic	Study Horizons	Minimum Study Area
II	Moderate Development	1. Opening Year	1. Site Access Drives
	500-999 peak hour trips	2. 5 years after Opening	2. All signal-controlled intersections within 1/2 mile and/or major street intersections without signal control and major driveways within 1/2 mile
III	Large Development	1. Opening Year	1. Site Access Drives
	1,000 - 1,500 peak hour trips	2. 5 years after Opening	2. All signal-controlled intersections within 1 mile and/or major street intersections without signal control and major driveways within 1 mile
IV	Regional Development	1. Opening Year	1. Site Access Drives
	>1,500 peak hour Trips	2. 5 years after Opening	2. All signal-controlled intersections within 1 mile and/or major street intersections without signal control and major driveways within 1 mile
		3. 20 years after Opening	

4.02.10 **Analysis Topics.**

The following items require analysis:

1. LOS for all Intersections and Access Points for Each Analysis
2. LOS for Critical Links for Each Analysis Year
3. Left-Turn Warrants
4. Signal Warrants
5. Weaving and Merge Analysis
6. Sight Distance
7. Queue Length Analysis
8. Impacts to Other Transportation Modes (bicycle, pedestrian, and transit)
9. Signal Progression
10. Acceleration/Deceleration Lanes
11. Transportation Demand Management (TDM) Measures
12. Any Mitigation Measures Suggested by the Consultant
13. Geometrics (must meet current Transportation Master Plan Standards or those Approved by the City)
14. Air Quality

15. Internal Circulation and Stacking
16. Driveway Conflicts

4.02.11 **Analysis Guidelines.**

Level of service (LOS) shall be computed for signalized and unsignalized intersections in accordance with the latest edition of the *Highway Capacity Manual*. The intersection LOS should be calculated for each of the following conditions (if applicable):

1. LOS for All Intersections and Access Points for Each Analysis Year.
2. Existing AM/PM Peak Hour Traffic Volumes (diagram required).
3. Existing AM/PM Peak Hour Traffic Volumes Including Site Generated Traffic (diagram required).
4. Future Peak Hour Traffic Volumes Without Site Traffic (diagram required).
5. LOS Results for Each Traffic Volume Scenario (table required).

The LOS table should include LOS results for AM and PM peak periods. The table shall show LOS conditions with corresponding vehicle delays for signalized intersections, and LOS conditions for the critical movements at unsignalized intersections. For signalized intersections, the LOS conditions and average vehicle delay shall be provided for each approach and the intersection as a whole.

As previously stated, if the new development is scheduled to be completed in phases, the TIS must, if directed by the City, include a LOS analysis for each separate development phase in addition to the TIS for each horizon year. The incremental increases in site traffic from each phase should be included in the LOS analysis for each preceding year of development completion. A figure will be required for each horizon year of phased development.

Where an intersection, segment, or approach LOS of E occurs, it should be mitigated to LOS D or better. If LOS D occurs, it must be identified and may require mitigation as determined by the City Engineer. The results of these mitigated analyses should also be shown in a table for comparison purposes.

Copies of all calculations and analysis results are required to be submitted as an appendix to the TIS report. This is to include all capacity analyses and all warrants analyses for each study year.

4.02.12 **Site and Off-Site Improvements.**

A detailed vicinity map and a proposed site plan for the development are also required in the study. The site plan or TIS should include schematic drawings and show the following:

1. All access locations to the site (include dimensions and cross section).
2. All impacted intersections in the study area.
3. Any existing or proposed signals and appropriate timing information.
4. Proposed highway or local street improvements (e.g., alignment, added lanes, and cross section).
5. Bicycle, pedestrian and public transit considerations and plans.
6. Site circulation patterns and parking.
7. All proposed improvements must be checked for conformance with land use and access control requirements.

4.02.13 **Recommendations and Conclusions.**

This chapter of the study report will be where the engineer's recommendations for mitigation measures will be detailed. A summarized version should be located in the executive summary section of the report. The mitigation measures should be addressed individually. Their efforts to improve the impacts of the development or land use action need to be explained and illustrated. An example is how the addition of a traffic signal at an access location will improve the level of service for the access while not hindering traffic progression.

4.02.14 **Herriman City Review and Conceptual Approval of the TIS Report.**

City staff must review and approve the contents and conclusions of the TIS report. An electronic copy of the report must be submitted to the Herriman City Engineer. Regular contact and consultation with City staff throughout the process is recommended to resolve issues early and save costly engineering and time delays later on. Refer to the report format for a suggested TIS outline.

4.02.15 **Report Format.**

The following outline is a guide for preparation of the Traffic Impact Study report. Some studies will be easily documented using this outline. However, additional sections may be warranted because of specific issues or results of the study. Likewise, inapplicable sections listed in the outline may be omitted from the report.

I INTRODUCTION AND SUMMARY
- A. Purpose of Report and Study Objectives
- B. Executive Summary
  1. Site Location and Study Area
  2. Development Description
  3. Principal Findings
  4. Conclusions / Recommendations
  5. Recommendations

II PROPOSED DEVELOPMENT
- A. Off-site Development
- B. Description of On-Site Development
  1. Land Use and Intensity
  2. Location (Vicinity Map)
  3. Site Plan and Access Locations
  4. Zoning
  5. Development Phasing and Timing

III STUDY AREA CONDITIONS
- A. Study Area
  1. Area of Significant Traffic Impact
  2. Influence Area
- B. Study Area Land Use
  1. Existing Land Use and Zoning
  2. Anticipated Future Development
- C. Site Accessibility
  1. Existing and Future Area Roadway System
  2. Traffic Volumes and Conditions
  3. Access Geometrics
  4. Other as applicable

IV ANALYSIS OF EXISTING CONDITIONS
- A. Physical Characteristics
  1. Roadway Characteristics
  2. Traffic Control Devices
  3. Pedestrian/Bicycle Facilities
- B. Traffic Volumes
  1. Daily, Morning, Afternoon, and Saturday Peak Periods (as applicable)
- C. Level of Service
  1. Morning, Afternoon, and Saturday Peak Hour (as applicable)
- D. Safety

V PROJECTED TRAFFIC
- A. Site Traffic (Each Horizon Year)
  1. Trip Generation
  2. Mode Split
  3. Pass-by Traffic (if applicable)
  4. Internal Capture (if applicable)
  5. Trip Distribution
  6. Trip Assignment

- B. Non-Site Traffic Forecasting (Each Horizon Year)
  - 1. Projections of Non-Site (Background) Traffic (methodology shall receive prior approval of City)
- C. Total Traffic (Each Horizon Year)

VI TRAFFIC AND IMPROVEMENT ANALYSIS

- A. Site Access
- B. Capacity and Level of Service Analysis
  - 1. Without Project (for each horizon year including any programmed improvements)
  - 2. With Project (for each horizon year, including any programmed improvements)
- C. Roadway Improvements
  - 1. Improvements Programmed to Accommodate Non-site (Background) Traffic
  - 2. Additional Alternative Improvements to Accommodate Site Traffic
- D. Traffic Safety
  - 1. Sight Distance
  - 2. Acceleration/Deceleration Lanes, Left-Turn Lanes
  - 3. Adequacy of Location and Design of Driveway Access
- E. Pedestrian Considerations
- F. Speed Considerations
- G. Traffic Control Needs
- H. Traffic Signal Needs (base plus each year, in five-year horizon)
- I. Site Circulation and Parking

VII FINDINGS

- A Site Accessibility
- B. Traffic Impacts
- C. Need for Improvements
- D. Compliance with Applicable Local Codes

VIII RECOMMENDATIONS/CONCLUSIONS

- A. Site Access/Circulation Plan
- B. Roadway Improvements
  - 1. On-Site
  - 2. Off-Site
  - 3. Phasing (as applicable)
- C. Other

IX APPENDICES

- A. Existing Traffic Volume Summary
- B. Trip Generation/Trip Distribution Analysis

C. Capacity Analyses Worksheets
D. Traffic Signal Needs Studies

X FIGURES AND TABLES

A. The following items shall be documented in the text or Appendices
1. Site Location
2 Site Plan
3. Existing Transportation System
4. Existing AM/PM Peak Hour Turning Volumes
5. Estimated Site Traffic Generation
6. Directional Distribution of Site Traffic
7. Site Traffic
8. Non-Site Traffic
9. Total Future Traffic
10. Projected Levels of Service
11. Recommended Improvements

XI DESIGN STANDARD REFERENCE

A. Design in accordance with current Herriman City Standards.
B. Conduct capacity analysis in accordance with the latest edition of the *Highway Capacity Manual*.
C. Use the Herriman Transportation Master Plan as a guide for street classification and general transportation goals.
D. Conduct signal warrant analysis in accordance with the latest edition of the *Manual of Uniform Traffic Control Devices* (MUTCD).
E. Use the State of Utah Access Management Standards, Wasatch Front Regional Council's *Access Management Techniques for Local Governments* and AASHTO's *A Policy on Geometric Design of Highways and Streets, 2001* as additional guides for access management policy.

4.03 Pavement Structural Section Design

4.03.01 Flexible Pavement Design

1. General - Design procedures required to produce an acceptable flexible pavement structural design on new and reconstructed roads in the City of Herriman. These design procedures are based on the recommendations found in the 1993 version of the *"AASHTO Guide for Design of Pavement Structures"* and on recommendations found in the November 1998 version of the *"UDOT Pavement Design Manual"*.

This design method will be used in all cases for all classifications of roadways. Pavement designers are required to follow this method, show their work, and stamp and sign these pavement designs.

All designs submitted to the City for review and approval must adhere to the following procedures to receive approval. Approval by the City does not relieve the designer of his or her responsibility to ensure that the information given to the City is accurate and that the submitted design will properly serve the type of traffic that use or will use the facility over the specified performance period.

2. Design Engineer's Responsibilities – The design of pavement sections is a combination of several different and varied factors of civil and geotechnical engineering, which are under the control of the design engineer, not the City. This includes the preparation of an adequate geotechnical report which is representative of soil conditions in the field, at the proper location, both horizontally and vertically, a determination of the types of vehicles which are going to use these roads, the numbers of these types of vehicles, an assumption of the life of the roadway, the equivalent single axle loads (ESALs) the roadway will be subject to, all of which are based in original assumption prepared and made by the design professionals preparing these pavement sections designs. Assumptions and studies made of these initial design parameters are the sole responsibility of the design professional preparing these pavement designs and are not dictated by the City. The design professional is tasked with performing an adequate design of the pavement design and affixes his/her stamp and signature indicating he/she have performed the design, and it is adequate to provide the service life designed for.

4.03.02 **Design Variables**

1. Performance Period – This refers to the period of time that the initial pavement structure will last before it needs rehabilitation. This also refers to the time elapsed as a new pavement structure deteriorates from its initial serviceability to its terminal serviceability. When consultants perform pavement designs for the City of Herriman, the *"Performance Period"* will be a minimum of 20-years from project construction completion.

2. Traffic ($W_{18,}$ Equivalent Single Axel Loads, ESAL) – The design procedures for highways and low volume roads are all based on the cumulative expected 18-kip equivalent single axle loads (ESAL) during the analysis period (W_{18}). The following procedure shall be used to convert mixed traffic into 18-kip ESAL units. Designers shall complete the ESAL calculations table below and submit it for design review.

2.A. TRAFFIC VOLUME/LOADING. The average daily traffic volume for the base year (first year) in the performance period should be entered in column A of the ESAL calculations table for each vehicle classification or group being considered in the traffic analysis, representative of the design location.

2.A.i. Volume - The volume count on existing streets is to be collected using tubes or counters over a minimum of 48 hours period of time. The volume count on new road sections is to be provided in an acceptable Traffic Impact Study, or by collecting volumes on an existing street that is similar to the new project and ***is to consider construction traffic.*** The City of Herriman Traffic Engineer must approve any AADT (Average Annual Daily Traffic) used in the design of new or reconstructed asphalt pavements.

ESAL Calculations					
Project Description:					
Street					
Begin					
End					
Project Scope					
Rigid or Flexible					
Construction					
Functional Class					
Design Period					
SN					
Vehicle Types	**AADT for Base Year Current Traffic (A)**	**Growth Factors (B)**	**Design Traffic Column A * B (C)**	**ESAL Factor (D)**	**Design ESAL Columns C * D (E)**

ESAL Calculations					
Project Description:					
Category 1 Axel Class 1-3					
Category II Axel Class 4					
Category III Axel Class 5-7					
Category IV Axel Class 8-10					
Category V Axle Class 11-13					
Total Design ESALs					

2.A.ii. Vehicle Classification - The classification count on existing streets is to be collected using tubes or permanent counters over a minimum of 48-hours period of time. The classification count on new road sections is to be provided in an acceptable Traffic Impact Study, or by collecting classification counts on an existing street that is similar to the new project and should consider construction traffic. The FHWA has adopted the following 13 vehicle classifications which are to be grouped into five categories to be used in the process of calculating design traffic. Categories or classifications may be combined and utilized an average truck factor.

Category One: (general two axle vehicles)

1. Motorcycles
2. Passenger Cars
3. Other Two-Axle, Four-Tire Single-Unit Vehicles

Category Two (buses)

1. Buses

Category Three: (Single unit trucks)

1. Two-Axle, Six-Tire Single-Unit Trucks
2. Three-Axle Single-Unit Trucks
3. Four or More Axle Single-Unit Trucks

Category Four: (single trailer trucks)

1. Four or less axle single trailer combinations
2. Five-axle single trailer combinations
3. Six or more axle single trailer combinations

Category Five: (multi-trailer trucks)

1. Five or Less Axle Multi-Trailer combinations
2. Six-axle multi-trailer combinations
3. Seven or more axle multi-trailer combinations

2.A.iii. The following truck load factor (ESAL per truck) for each vehicle classification/group is to be used if site specific load data is not available.

Truck Load Factor

Axle Class	All Roads
1-2	0.0002
3	0.03
4	0.88
5-7	0.3529
8-10	2.6028
11-13	3.3584

Source: UDOT Pavement Design Manual, Table 3B-5

3. Reliability (Z_R) - Use a reliability of 90% for all roads

4. Standard Deviation/Error (S_O) – Use a standard deviation of 0.45 for all roads

5. Present Serviceability Index
   - 5.A. Use an initial serviceability index (p_i) of 4.2 for all roads.
   - 5.B. Use a terminal serviceability index (p_t) of 2.5 for all roads.

6. Subgrade Modulus – Use subgrade modulus based on soil conditions within a depth of 0 to 3 feet below the projected pavement subgrade surface.

   6.A. BORING/SAMPLE/TEST LOCATIONS - Location of the borings and samples shall be determined based on the centerline location of the planned road, the planned width of the road and the expected soil conditions for the area.

   6.A.i. Spacing of the test locations will be controlled by the type and profile of the soil at each location. For long road sections, the City of Herriman practice includes using 200 feet as a starting interval for exploration locations and varying this interval up to a

maximum of 1000 feet for uniform conditions, with a minimum of 3 borings for each roadway segment.

6.A.ii. If the soil types significantly change between test holes, intermediate locations shall be investigated. The determination of the number and location of samples and/or borings shall consider the reliability of the pavement design and the cost-effectiveness of the investigation. Borings, samples, and other explorations shall be located so that the sites can be found during construction.

6.A.iii. Use of Dynamic Cone Penetrometer (DCP) or other in-situ testing procedures must account for correlations to fully saturated design conditions.

6.B. SELECTION OF DESIGN CBR – Subgrade soil CBR values shall be determined using samples compacted at optimum moisture content to 95 percent of the maximum density obtainable by the AASHTO T-180, method D, of compaction. CBR tests shall be performed according to AASHTO T-193 except that a standard surcharge weight of 10 pounds shall be used for soaking and the penetration test of all samples.

6.B.i. A CBR chosen for pavement design purposes shall have a confidence level of 90% for a normal distribution of values. If it is determined that there is an insufficient number of CBR tests, then the lowest CBR value will be used for design. This will be determined by the City Engineer. The following table indicates the number of CBR tests that will provide a 90 percent confidence level that the average test value is within plus or minus 1 unit of the average for a normal t-distribution of values.

Correlation of Range vs. Number of Tests for 90-percent Confidence						
CBR Test Range	1	2	3	4	5	6
Number of Required Tests	2	3	4	5	6	8-9

(Source: UDOT Pavement Design Manual, Table 3A-1)

7. Effective Roadbed Soil Resilient Modulus (M_R) - Use the CBR value of the soil to determine the effective roadbed soil resilient modulus (M_R). The conversion process is based on laboratory correlations between CBR and M_R using the following table. The maximum value for unstabilized natural soils is 10,000 psi.

CBR (%)	M_R (psi)
<3	3120
3	4118
4	5014
5	5842
6	6618
7	7355
8	8058
9	8735
10	9388
>10	10000

8. Pavement Layer Material Characterization - Use the following values of resilient modulus based on material properties found in Utah:

Resilient Modulus for Materials in Utah	
Untreated Base Course (UTBC)	27,000 psi
Granular Borrow (GB) (3" minus, A-1-a, non-plastic)	15,000 psi

(Source: UDOT Pavement Design Manual, Table 3D-1)

9. Layer Coefficients - Use the following values for layer coefficients:

Flexible Pavement Layer Coefficients	
Open-Graded Friction Course	= 0.30
Hot Mix Asphalt/ Stone Matrix Asphalt	= 0.40
Untreated Base Course	= 0.10
Granular Borrow	= 0.08

(Source: UDOT Pavement Design Manual, Table 3D-2)

10. Drainage Coefficient - Identify the level or quality of drainage that is achieved under a specific set of drainage conditions.

10.A. Use the following guide to qualify drainage:

Drainage Quality Classification	
Quality of Drainage	**Water Removed Within**
Excellent	= 2 hours
Good	=1 day

Drainage Quality Classification	
Quality of Drainage	**Water Removed Within**
Fair	= 1 week
Poor	= 1 month
Very Poor	= water will not drain

(Source: UDOT Pavement Design Manual, Table 3D-3)

10.B. Use the following table to identify the proper drainage coefficient. The drainage coefficient applies only to the effects of drainage on untreated base and subbase layers only. Use a maximum coefficient of 1.0.

Drainage Coefficient Values

Quality of Drainage	Percent of Time Pavement Structure is Exposed to Moisture Levels Approaching Saturation			
	< 1%	1% - 5%	5% - 25%	> 25%
Excellent	1.40 – 1.35	1.35 – 1.30	1.30 – 1.20	1.20
Good	1.35 – 1.25	1.25 – 1.15	1.15 – 1.00	1.00
Fair	1.25 – 1.15	1.15 – 1.05	1.05 – 0.80	0.80
Poor	1.15 – 1.05	1.05 – 0.80	0.80 – 0.60	0.60
Very Poor	1.05 – 0.95	0.95 – 0.75	0.75 – 0.40	0.40

(Source: UDOT Pavement Design Manual, Table 3D-4)

4.03.03 Structural Section Design

1. Design Structural Number (SN) – AASHTO Flexible Pavement Empirical Equation **-** The following equation shall be used to determine the design structural number for roadway structural sections of new flexible pavement in the City of Herriman. This equation is widely used and has the following form:

$$\log_{10}(W_{18}) \equiv Z_R \times S_O + 9.36 \times \log_{10}(SN+1) - 0.20 + \frac{\log_{10}(\Delta PSI)}{0.40 + \frac{1094}{(SN+1)^{5.19}}} + 2.32 \times \log_{10}(M_R) - 8.07$$

where:

W_{18}	=	Predicted number of 18,000 lb. ESALs
Z_R	=	Standard normal deviate
S_O	=	Combined standard error of the traffic prediction and performance prediction
PSI	=	Difference between the initial design serviceability index, Po, and the design terminal serviceability index Pt
MR	=	Subgrade resilient modulus (in psi)

SN = Structural number (an index that is indicative of the total pavement thickness required)

= $a_1D_1*a_2D_2m_2*a_3D_3m_3$

a = layer coefficient of layer i

D = thickness of layer i

m = drainage coefficient for layer *i*

(Source 1993 AASHTO Guide for the Design of Pavement Structures, page I-5, section 1.2)

2. Selection of Layer Thicknesses - Identify a set of pavement layer thicknesses that will provide the required load-carrying capacity that corresponds to the design structural number. The following equation provides the means for converting the structural number into actual thicknesses of surfacing, base and subbase materials:

$SN = a_1D_1*a_2D_2m_2*a_3D_3m_3$ where:

a = layer coefficient of layer *i*
D = thickness of layer *i*
m = drainage coefficient for layer *i*

This equation does not have a single unique solution. There are many combinations of layer thicknesses that can be used to achieve a given structural number. There are, however, several design, construction and cost constraints that can be applied to reduce the number of possible layer thickness combinations, and to avoid the possibility of constructing an impractical design. The following principles should be adhered to.

2.A. LAYERED DESIGN ANALYSIS – The 1993 AASHTO Guide for the Design of Pavement Structures requires the designer to recognize that an appropriate layered design follows the principles identified in Figure 1. First, the structural number required over the roadbed soil need to be computed. In the same way, the structural number required over the subbase and base layers needs to be computed, using the appropriate strength values for each. By working with the differences between the computed structural numbers required over each layer, the maximum allowable thickness of any given layer can be computed. The thickness for each layer is to be computed in this manner.

2.B. The thickness of any layer should exceed the thickness of the layer above.

Procedure for Determining Thicknesses of Layers Using a Layered Analysis Approach

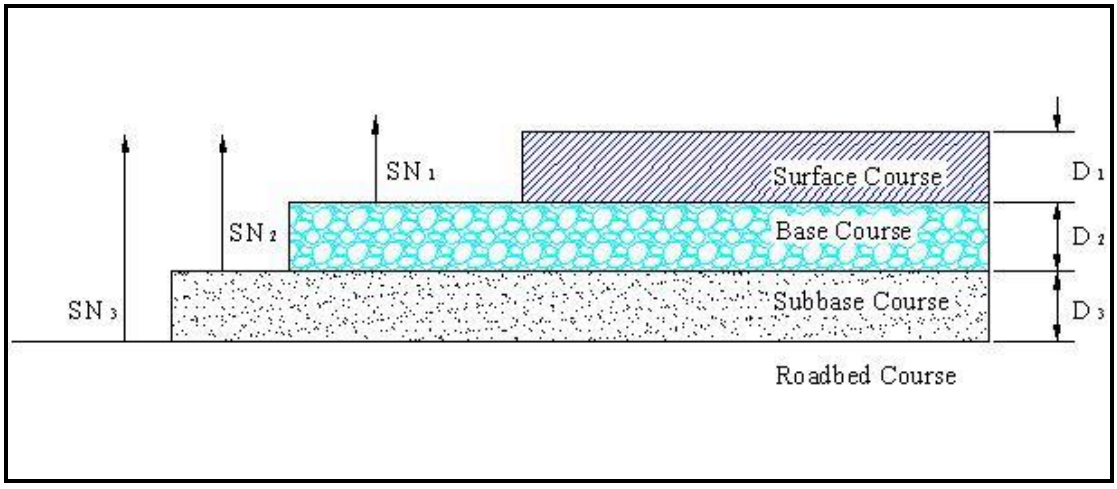

$$D^*_1 \geq \frac{SN_1}{a_1}$$

$$SN^*_1 = a_1 D_1 \geq SN_1$$

$$D^*_2 \geq \frac{SN_2 - SN_1}{a_1 m_2}$$

$$SN^*_1 + SN^*_2 \geq SN_2$$

$$D^*_3 \geq \frac{SN_3 - (SN^*_1 + SN^*_2)}{a_3 m_3}$$

3. Stability and Constructability - Use the following minimum values for surface and base layers. These values are not a substitute for a professionally prepared roadway structural section design but are used as a starting point in the design process. The stricter of the two (pavement design recommendation and listed minimums below) will be required.

Asphalt Concrete Pavement Minimum Structural Section

Pavement Section	Traffic Classification				
	I Local	IA Major Local	II Minor Collector	III Major Collector	IV Arterial
Asphalt Concrete Surface	3"	3″	4"	5"	5"
Untreated aggregate base	8"	12″	10"	10"	6"
Aggregate subbase	-	-	-	-	12"

(a) Use of this chart does not relieve the design professional from preparing a roadway structural section design based on the AASHTO empirical formula.

4.03.04 **Materials Design Requirements**

The pavement designer should include materials properties associated with design assumptions and inputs. These properties are primarily related to roadway classification, material strength and durability requirements, and placement requirements. Pavement designer must note where properties or placement practices deviate from Herriman City standards.

1. Hot Mix Asphalt - Identify the following:
   - 1.A. Traffic Class
   - 1.B. Binder Grade
   - 1.C. Mix Gradation
   - 1.D. Laboratory Compaction Effort
2. Granular Base Courses – Identify the following:
   - 2.A. Gradation
   - 2.B. Soil Class
   - 2.C. Required Minimum Strength (CBR or M_R)
3. Treated Base Courses – Identify the following:
   - 3.A. Gradation
   - 3.B. Binder Material
   - 3.C. Minimum Binder Content
   - 3.D. Required Strength (Compressive Strength or M_R)

4.03.05 **Flexible Pavement Mix Design Requirements**

Requirements for HMA Mix Design for roadway surfaces in Herriman are divided into two categories based on roadway classification:

1. High Traffic Road – Arterials & Major Collectors (Class III)
   - 1.A. Binder Grade: PG 64-34[(a)]
   - 1.B. Aggregate: ½″

1.C. RAP Content: 30% Max

2. Lower Traffic Road – Minor Collectors (Class II), Local Roads, & Trails(Class I)
   2.A. Binder Grade: PG 58-28
   2.B. Aggregate: ½"
   2.C. RAP Content: 15% Max, up to 30% RAP may be used with binder grade PG 64-34[(a)]

      a. Blending chart limitations for mixes exceeding 15% RAP must meet -28 for low end PG temperatures. Adjust virgin binder grade to accommodate RAP contents in excess of 15%. Use ASTM M323 Appendix X1 Blending Chart to determine acceptable RAP content. Submit RAP binder grading and blending chart with mix design for mix over 15% RAP. (Per APWA 32 12 05 2.1)

4.04 Environmental Site Assessment

In 2001 the Environmental Protection Agency issued a record of decision regarding the environmental mitigation that occurred in Herriman under an Emergency Response Action. Certain properties were tested and found high levels of lead and arsenic. As properties develop, some properties that have been tested shall follow a procedure for cleanup prior to development of the property. The City has information on areas that have or are suspected to have lead and arsenic contamination. Action levels can be found in Herriman City Code § 10-15A-4.

In 2001 the Environmental Protection Agency tested numerous properties and the levels found were documented and are on file at the City. Based on the requirements outlined in the *Development of Contaminated Properties*, found on the Herriman Website, some properties are required to conduct tests to determine the property's individual lead and arsenic levels. In some areas, additional testing may be required to determine depths of lead and arsenic levels. If it is determined that lead and arsenic levels are present or suspected, the developer shall submit a remediation plan. See part 4.04.01 for plan requirements. After the remediation plan is reviewed and approved by the City a preconstruction meeting shall be held and then the site may be remediated. The developer shall be responsible for all quality control and assurance that the site is cleaned to appropriate levels. After cleanup is complete, a final report shall be submitted to the City stating how clean up was performed and any additional information found during the remediation process. See part 4.04.02 for Final Report requirements.

4.04.01 **Remediation Plan.**

The remediation plan shall be reviewed by the Engineering Department. All plans shall discuss what levels are present on property and how the site will be remediated and what precautions and sampling will be conducted to ensure property is cleaned to the appropriate levels. The remediation plan shall show at a minimum:

1. Site Location
2. Site History and Previous Investigations
3. Proposed Use
4. Cleanup Goals
5. Site Health and Safety
6. Impacts to Surrounding Properties
7. Site Security
8. Work Plan / Removal Procedures
9. Air Monitoring and Dust Control
10. Stormwater Pollution and Prevention Plan
11. Confirmation Sampling
12. Post Remedial Management
13. Quality Assurance Plan

4.04.02 **Final Remediation Report**

After remediation efforts have been completed the developer shall submit a report outlining the remediation process. This report shall show the following at a minimum:

1. Results
2. Methods
3. Deviation from plan

4.04.03 **Development of Contaminated Properties**

For additional information on the City's requirements for development of contaminated properties, please refer to "*Development of Contaminated Properties: Procedures of Herriman City*". A copy is available from the Engineering Department and it is also posted at the following location on the City's website: Development of Contaminated Properties

4.05 Street Design

Street improvement plans and profiles are required on all roadways within a development. All plans of public and private roads will be reviewed by the Local Fire Authority to verify widths will meet Fire apparatus access with proper turnarounds (See *Standard Plan No. RD-07*).

4.05.01 **Design Standards**

All public and private streets, trails and paths located within the City are subject to jurisdiction of the City. Their design shall comply with the requirements of this section, as well as the requirements of the current edition of the following publications, as applicable:

1. A Policy on Geometric Design of Highways and Streets (AASHTO)
2. Guidelines for Geometric Design of Low-Volume Roads (AASHTO)
3. Guide for the Development of Bicycle Facilities (AASHTO)
4. ADA Accessibility Guidelines (US Access Board)
5. Proposed Guidelines for Pedestrian Facilities in the Public Right-of-Way (US Access Board) (or the adopted version when it is adopted)

In cases of conflict, a determination shall be made by the City Engineer.

4.05.02 **Design Speed.**

All roadways, public and private, shall be designed in accordance with the following design speeds using AASHTO's guidelines, principles, and practices. Exceptions to the design speeds must be received in writing from the city engineer:

1. Local: 25 miles per hour
2. Collector: 40 miles per hour
3. Arterial: 45 or 50 miles per hour, as determined by the City Engineer. A design speed of 45 mph is more appropriate for roadways that function more as minor arterials with greater roadside friction. A design speed of 50 mph is more appropriate for roadways that function more as highways.

Note that the posted speed limit is not necessarily the design speed – posted speed limits are typically 5 mph slower than the design speeds at the higher speeds.

4.05.03 **Vertical Design**

1. The vertical alignment shall be such as to minimize grade breaks along the centerline and curb lines. Allowable grade breaks without vertical curves shall not exceed a slope of 1% at street centerline and up to a 2% slope on the curb line at intersections or within curb returns. Eliminate grade breaks in excess of the above criteria by using vertical curves.

2. Minimum slope allowed is 0.5% (applies to all gutter grades); flatter slopes are only allowed with specific written approval from the City Engineer.

3. Maximum longitudinal slope along street centerlines shall be as follows, unless the design engineers submits justification for a steeper slope, (including why the standard maximum slope is unattainable and what precautions will be taken to mitigate for having a steeper slope), and obtains specific written approval from the City Engineer for the steeper slope:

   a. Arterials: 8%
   b. Collectors: 8%
   c. Locals: 10%

4. Landings. A landing is defined as the area on the stop or yield controlled leg of an intersection between the edge of the traveled way of the cross street and the point at which the side street grade begins to exceed 3%. The required minimum lengths of the landings are as follows:

Arterial	200 feet
Collector	100 feet
Local street	50 feet
Cul-de-sac	25 feet

5. The maximum difference in curb elevations from one side of a street to the other is 1 foot. Any variation must receive written approval by the City Engineer.

6. All surfaces shall consist of an approved design capable of supporting loads specified in the Local Fire Authority guidelines or standards.

4.05.03.a Hillside Area Street Design.

If development falls within a Hillside Area, street design shall comply with the requirements of the Hillside Overlay Zone (see Article B. Hillside Overlay Zone at Hillside Overlay Code).

See the Hillside Development Area Map at Appendix F.

4.05.04 **Traffic Calming**

In residential areas, traffic calming measures may be required for linear segments of roadway that exceed 750 feet in length. The following are acceptable traffic calming measures:

1. Center Median or Traffic Island
2. Radar Driver Feedback Signs

3. Choke Points or Neck-downs
4. Raised Crosswalks
5. Proposed Guidelines for Pedestrian Facilities in the Public Right-of-Way (US Access Board) (or the adopted version when it is adopted)

At the intersection of two local roads, the following measures should be implemented wherever possible:

1. Mini-Roundabouts
2. Curb Extensions (Bulb Outs)

Implementation of traffic calming devices in existing roadways shall be approved by the Herriman City Traffic Committee and the City Engineer.

4.05.05 **Roadway Connections**

If a development exceeds 30 lots, two (2) roadway connections shall be provided to a public street. Spacing between the roadway connections shall be approved by the local fire marshal.

4.05.06 **Superelevation**

Superelevation rates above 0.04 ft./ft. are prohibited. Superelevation will not be allowed on local residential streets and collectors, other than at knuckles. Superelevation design at knuckles shall conform to the following:

W	B
66'	20.5'
60'	16'

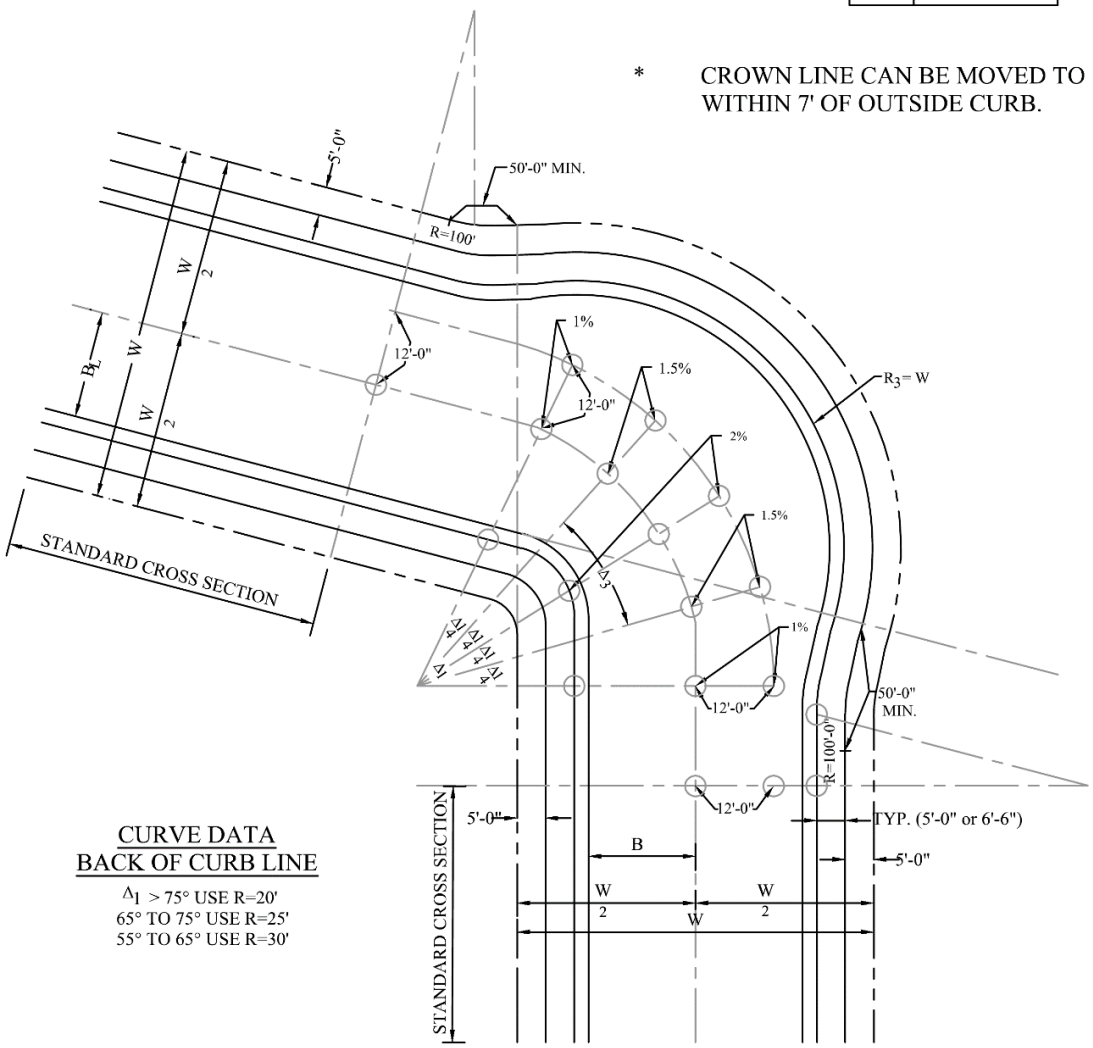

NOTES:

1. ELEVATIONS ARE REQUIRED WHERE CIRCLED.
2. LIMITS OF SLOPE, CROWN LINE TO OUTSIDE GUTTER: MAXIMUM 4%; MINIMUM=1%

4.05.07 **Horizontal Design**

4.05.07.a Centerline Radius.

1. Local Streets: Minimum centerline radius of 100’ unless otherwise waived by the City Engineer to provide a means for traffic calming
2. Collector Streets: Minimum centerline radius of 200'

3. Arterial Streets:
   a. Design speed of 40 mph: Comply with Section 3.3.6, Design for Low Speed Streets in Urban Areas, in AASHTO "A Policy on Geometric Design of Highways and Streets"
   b. Design speed of 45 mph: Comply with Section 3.3.4, Design for Highways in Rural Areas, and Freeways and High-Speed Streets in Urban Areas, in AASHTO "A Policy on Geometric Design of Highways and Streets"
4. Minimum tangent between curves with a length of twice the right-of-way width is required along the centerline of local and collector streets.

4.05.07.b Centerline Deflection

No angle points with a deflection angle of greater than 1 degree shall be allowed along centerlines except as allowed within intersections.

4.05.08 **Intersections**

4.05.08.a Horizontal Intersection Design.

See *Standard Plan No. RD-02.*

4.05.08.b Intersection Back of Curb Radii.

See the road design detail sheets.

4.05.08.c Number of Legs

The intersection of more than two streets (i.e., four legs) at one point shall not be allowed. Where such occur, roundabouts or traffic circles may be appropriate.

4.05.08.d Intersecting Street Angle

Street intersections shall be at ninety 90° where possible and shall not differ from 90° by more than 5°. Any other intersection design shall require written approval from the City Engineer. See *Standard Plan No. RD-02*.

4.05.08.e Angle Points and Horizontal Curves

If possible, the horizontal alignment should be straight through the intersections, but where horizontal curves cannot be avoided, the following should be observed:

1. Use a curve of sufficient radius to provide adequate sight distance.
2. Minimize use of superelevation.
3. Do not begin or end a curve within an intersection.
4. Eliminate angle points with a deflection angle in excess of 2 degrees on major or secondary roads at the intersection of collector or arterial streets by use of a large radius curve.
5. Angle points with a deflection angle of up to 5 degrees are permissible at the intersection of two local streets.

4.05.08.f Offset Intersections.

Offset intersections shall be avoided whenever possible and offsets shall be provided with minimum distances between center lines as follows:

1. Local Streets: One hundred fifty feet (150').
2. Collectors: Five hundred feet (500').
3. Arterials: Eight hundred feet (800').

Variations from these values must be supported by a traffic impact study that is stamped by a Professional Engineer and require the written approval of the City Engineer.

4.05.08.g Left Turns.

Left turns may be prohibited within two hundred feet (200') of major intersections either by signs or concrete medians.

4.05.08.h Waterways.

At intersection of roadways, waterways shall not be used unless approved by City Engineer.

4.05.09 **Private Roadways**

Private roadways shall be designed and constructed to the same standards as public streets (i.e., width, cross section, pavement section, etc.).

4.05.10 **Variations or Exceptions.**

In cases where unusual topographical, aesthetic or other exceptional conditions or circumstances exist, variations or exceptions to the requirements of this chapter must receive a written exception from the City Engineer; provided, that the variations or exceptions are not detrimental to the public safety or welfare.

4.05.11 **Street Arrangement.**

The arrangement of streets in new developments shall make provision for the continuation of the existing streets in adjoining areas (or their proper protection where adjoining land is not subdivided, insofar as such may be deemed necessary for public use by the Herriman City Planning Commission). The street arrangement shall not cause unnecessary hardship to owners of adjoining property when they plat their own land and seek to provide convenient access to it.

4.05.11.a Arterial & Collector Streets

Arterial and Collector streets shall conform to the width designated on the Standard Plan No. RD-01A and RD-01B wherever a development falls in an area for which a Transportation Master Plan has been adopted and shall be identified in the Transportation Master Plan.

4.05.11.b Local Streets

1. Local streets that provide connectivity through a subdivision to a larger road network shall have a minimum width of 60 ft.
2. A Major Local street is local by classification, but serves more than one project, development, or phase of development. Additional structural strength is provided for additional construction traffic loading (see Table in section 4.03.03).
3. The width of cul-de-sacs, permanent dead-end streets, and internal subdivision loops may be 53 ft with approval of City Engineer based on the criteria below.

Recommended Criteria for 53' ROW Section
Less than 500 vehicles per day • 50 single family houses based upon accepted trip rates • 75 apartments based upon accepted trip rates
Greater than 8% grade but less than 1/2 mile in length
Greater than 10 ft. vertical cut/fill slope but less than 1/2 mile in length
Hillside overlay zone
Neighborhood collectors (60' roads) or larger on each side of the road
Connections to less than 5 intersecting roadways
Does not provide access to a church, school, park, clubhouse, commercial establishment, or other public use.
The geometrics of the road are conducive to the 53' section (i.e., no sharp corners, grades meet a 25-mph design speed, sight distances are all met, etc.)
Driveways are staggered to reduce parking across the street.

4.05.11.c Minor Terminal Streets

Cul-de-sacs shall not be longer than 600 feet from the centerline of the adjoining street to the center of the cul-de-sac without approval of the City Engineer. See *Standard Plan No. RD-03*. Cul-de-sacs in excess of 300' shall have "Dead-End" or "No Outlet" sign at the entrance.

4.05.11.d Temporary Turnarounds

Where a street longer than 150 feet is designed to remain only temporarily as a dead-end street, an adequate turning area shall be provided as follows:

1. Dead-end streets of length greater than 150 feet shall be required to have an all-weather surface turn-around in accordance with Herriman City *Standard Plan No. RD-07*.
2. Temporary ends of street in phased development must provide the width and all-weather surfaces but may omit curb and gutter on a turnaround.
3. A Temporary Turnaround Easement shall be required on the final dedication plat denoting the diameter of the turnaround as temporary until the road is extended at a future date. The dedication of the temporary turn-around must be signed by the property owner on which the turn-around is located. See *Standard Plan No. RD-07*.

4.05.11.e Fence and Walls Along Collector and Arterial Street

Fence type, size, and height shall comply with Herriman City Code 10-21-8

4.05.11.f Standard Street Sections

All proposed streets, whether public or private, shall conform to the city typical roadway cross sections found in the *Standard Plan Nos. RD-01A, RD-01B*, and *RD-01C*. Any deviation to the standard cross section shall be approved by City Council after recommendation from the City Engineer and the Planning Commission. Parking on any roadway, equal to or less than 26 ft drivable width, shall be allowed on one side only.

For emergency vehicular access purposes, all residential units shall be accessible and addressed off a roadway that conforms to the city typical roadway cross sections or a roadway cross section that is approved by City Council.

4.05.11.g Alleys

Alleys, or alleyways are any vehicular access corridors that do not meet the city typical cross section requirements as depicted in Stand*ard Plan Nos. RD-01A,*

RD-01B, and *RD-01C*. Alleys may be required in the rear of business lots and shall only be used where allowed by Herriman City code. Alleys shall comply with the following:

1. Shall comply with Herriman City code.
2. Minimum width of 20 feet
3. Maximum length of 150 ft for residential developments.
4. No parking will be allowed in alleys.
5. All alleys shall be privately owned and maintained.

4.05.11.h Bridges

Design and construction of new bridges, whether essential for the overall circulation plan of the city or required only to serve a development, shall be approved in advance by the City. For bridges identified as essential structures to the City, the City may participate financially, and in the case of a bridge required to serve only a development, the developer shall pay the total cost of construction. The developer shall comply with all the conditions imposed by the City relative to the bridge location, design and construction. All bridge design shall be performed by a professional engineer as per applicable State laws.

4.05.11.i Orphaned Park Strips

Plans for street layout shall avoid creating orphaned park strips. Orphaned park strips may be defined as any park strip within the public right-of-way (ROW) that borders along the rear yard of a private lot owner.

4.05.12 **Driveways.**

All property shall be limited to the following number of street driveway entrances:

1. For the first two hundred feet (200') of property frontage along a street, a maximum of two (2) driveways, except that single-family dwellings shall be permitted only one access unless a circular driveway is utilized.

2. For each additional one hundred fifty feet (150') of property frontage along a street, a maximum of one additional driveway. In no case shall more than fifty percent (50%) of the property frontage along the street be used for driveway purposes.

3. Residential Driveways shall not access Arterial and Collector roadways, unless approved by the Planning Commission.

4. All driveway grades shall not exceed ten percent (10%) within twenty feet (20') of the roadway boundary.

5. At a minimum, driveways shall extend to the public or private road right-of-way with either concrete or asphalt.

6. There shall be a minimum ten feet (10') distance between all approved driveways.

7. All Drive approaches shall be a minimum of five feet (5’) from all fire hydrants, signs, trees, light poles, water meters, utility boxes, and all other items located in park strips or the public right of way or utility easements.

8. Residential driveways shall be a minimum of five feet (5') and commercial driveways a minimum of eight feet (8’) from a side property line at the front lot line. These distances are measured from the driveway itself, not the drive approach.

9. Additional requirements for residential driveways (except multiple-family):

    a. The minimum width of a driveway shall be 10' and the maximum shall be 35' (measured at the back of the drive approach).
    b. There shall be a minimum of 35' between the entrances of circular driveways.
    c. The drive approach shall not cover more than 50% of the lot frontage.
    d. No radius or flare portion of a driveway shall intersect the adjacent projected property line except where shared driveways are utilized.

10. Additional requirements for commercial, industrial and multiple-family driveways:

    a. The minimum width of a driveway is 10' and the maximum shall be 50' (measured just beyond the drive approach).

11. **Driveway Location near Intersection.** Driveways shall be set back from roadway intersection, measured from the end of the curb return as listed below:

Driveway Type	Local (ft)	Collector (ft)	Arterial (ft)
Multi-Family	50	60	80
Residential	20	50	--

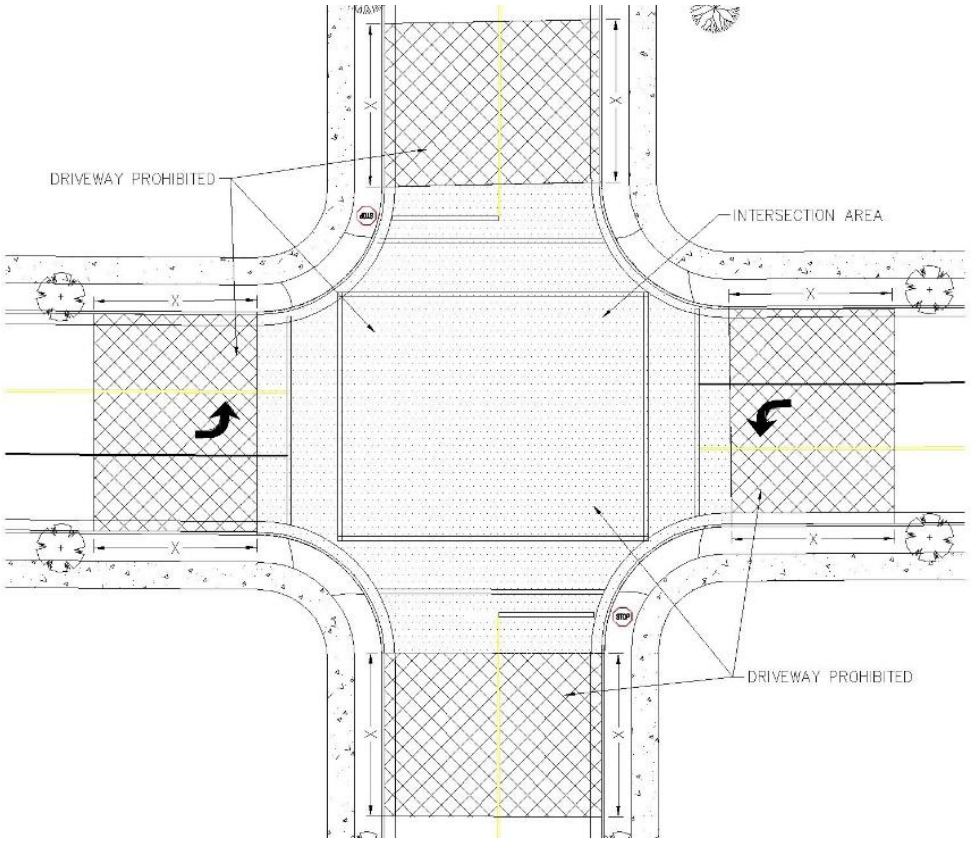

12. **Driveway Offsets.** All single-family residential driveways shall be offset from other driveways by no less than twice the flare width as per APWA Standard Plans. All others shall have a minimum separation as shown in the following table and figure.

COMMERCIAL/INDUSTRIAL/MULTI-FAMILY DRIVEWAY OFFSETS			
FUNCTIONAL CLASSIFICATION	**MINIMUM DRIVEWAY SPACING (feet)**		
	UPSTREAM AND DOWNSTREAM	**OPPOSING UPSTREAM**	**OPPOSING DOWNSTREAM**
ARTERIAL/FREEWAY INTERCHANGE AREAS	STATE OF UTAH HIGHWAY ACCESS MANAGEMENT STANDARDS APPLY		
MAJOR COLLECTOR	200	175	125
MINOR COLLECTOR	150	125	125
LOCAL	See driveway offsets	See driveway offsets	125

NOTES:

1. As determined by the City Engineer, engineering judgment shall override the recommended dimensions set forth in this table if warranted by specific traffic conditions.
2. Driveway spacing is measured as shown in figure 1.
3. Corner clearance requirements for access points should meet or exceed the minimum driveway spacing requirements.
4. For corner properties, access to public streets should be provided from the lesser (lowest functional classification) street.
5. Driveways in right turn lane transition areas not allowed unless approved by the City Engineer.

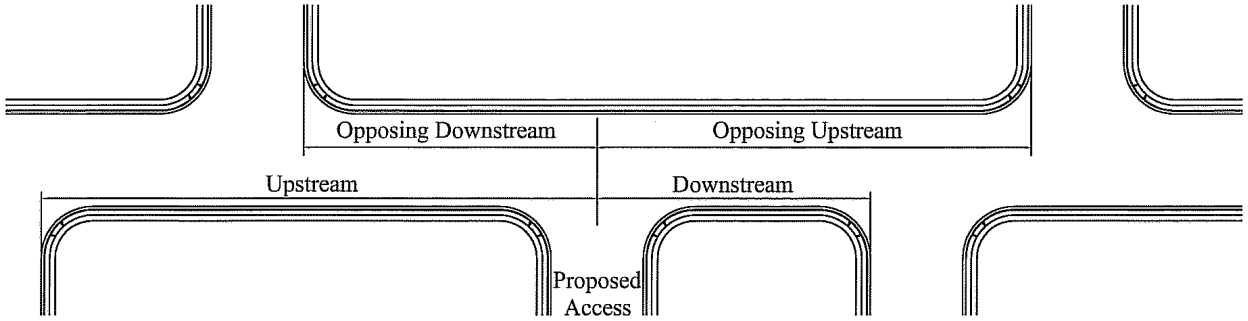

Figure 1: MEASUREMENTS FOR MINIMUM ACCESS SPACING STANDARDS

13. **Common Driveways.** Driveways along the property lines may be installed for common use of both adjacent properties only upon approval by the City Engineer and guaranteed by a recorded access agreement. Such driveway width shall be limited to the maximum allowable individual driveway width. Common driveway width may be extended by up to 10 feet for Commercial and Industrial zones.

4.05.13 **Names and Numbers.**

Names of new streets shall not duplicate existing or platted street names unless a new street is a continuation of, or in alignment with, an existing or platted street. House numbers shall be assigned in accordance with the house numbering system now in effect in the city. All new streets shall be numbered if they are in alignment with the grid. They shall be named if not in alignment with the grid or are not easily aligned by their curved nature. Following approval of street names by the county, all street names and house numbers shall be reviewed and approved by the City's GIS Department. No lot address shall end in a zero or five; this designation is given to streets.

4.05.14 **House Numbering Standard.**

The assignment of frontage numbers addresses shall be measured and uniformly consecutive with even numbers on the right side of the street and odd numbers on the left side of the street looking away towards the east, west, north, or south from the junction of the baseline and meridian streets. Alternatively, even numbers shall always be on the right side of the street and odd numbers on the left in the direction of increasing frontage intervals. Numbering methods shall comply with the Salt Lake County Addressing Standard (see SLCo Addressing Standards.

All residential units shall be addressed off of a roadway street section that conforms to section to the City Street Cross Sections as adopted by the City. (See *Standard Plan No's. RD-01A, RD-01B*, and *RD-01C*).

4.05.15 **Street Trees or Shrubs.**

Street trees or shrubs are required along all streets within Herriman City. Tree and shrub varieties shall be approved by Herriman City. Spacing shall provide for at least one tree per lot and as required in Herriman City code section 10-31-7(e). Selected trees species shall comply with city approved tree list found in *Standard Plan Nos. LP-13, LP-14*, and *LP-15*.

Pressurized irrigation systems must be provided to water all landscaping; the system shall be supplied water from the lot with adjacent street frontage. Upon completion of the 12-month warranty period, the street trees or shrubs become property of Herriman City. The adjacent property owner is required to maintain the trees or shrubs according to applicable City ordinances. See *part 4.16 Landscape Planting Design* and *Standard Specification 32 94 23 Planting* for more information about planting trees and shrubs.

No trees shall be placed within 30 feet of a regulatory street sign or in a position to prevent oncoming motorists from clearly seeing the traffic signs, whichever is more stringent. See Herriman City Code 6-2-4 at: Herriman City Code 6-2-4.

4.05.16 **Monuments.**

Permanent survey monuments shall be accurately set and established at the intersections of centerlines of streets within the development and intersections with centerlines of existing streets and the beginning and ends of curves on centerlines or points of interest or tangents. All permanent survey monuments shall remain in place, or be reset at the Developer's expense, when approved by the City Engineer. Monuments shall be of a type specified in the latest edition of the APWA. Plans, and all development plans shall be tied to a section corner or monument of record, as established by the Salt Lake County Surveyor. A Salt Lake

County Surveyor's Monument Preservation Permit shall be submitted to the Salt Lake County Surveyor's office. A copy of the permit can be found here: Salt Lake County Surveyor's Monument Preservation Permit

4.05.17 **Sidewalks.**

Meandering sidewalks will not be allowed unless approved by the City Engineer.

4.05.18 **Sidewalk Ramps.**

All sidewalk ramps shall be designed to comply with a minimum standard as established by the most recent version of the following, as applicable:

1. A Policy on Geometric Design of Highways and Streets (by AASHTO)
2. Guide for the Development of Bicycle Facilities (by AASHTO)
3. ADA Accessibility Guidelines (ADAAG by US Access Board)
4. Proposed Guidelines for Pedestrian Facilities in the Public Right-of-Way (by US Access Board) (or the adopted version when it is adopted)
5. United States Federal Highway Administration (FHWA)
6. Manual on Uniform Traffic Control Devices (MUTCD, by FHWA)

4.05.18.a Detectable Warning Surface:

Truncated dome panels shall be installed on all sidewalk ramps. All panels shall be a pewter or dark gray color. Detectable warning panels shall be offset 1 inch from the back of curb. Dome panels shall cover the entire traveled space.

4.05.18.b Detailed Design:

A detailed sidewalk ramp engineering design is required in situations where the slope of any approaching road is 5% or greater, or where there is not a constant grade along the curb. When areas throughout the City appear to be difficult to comply with ADAAG and may be difficult for the contractor to achieve construction requirements, the City will require engineering design to be performed and submitted to the City for ramp approval. Detailed engineering design of sidewalk ramps may be required at the discretion of the City during the design or construction phase of a project.

4.05.18.c Mid-Block Pedestrian Ramps

Mid-block pedestrian crossing shall not be permitted unless approved by the City Engineer in writing.

4.05.18d Apex Bidirectional Pedestrian Ramps

Apex or Bidirectional pedestrian ramp shall only be used at intersections with bidirectional crossings. Directional ramps shall be used when crossing in one direction. *Standard Plan No. RD-10*

4.06 Street Signs.

Street signs placed within Herriman shall be installed according to the stipulation listed below, and as shown on *Standard Plan No.'s RD-05* and *RD-06*.

1. Components of the signs will be in accordance with the standards, specifications and styles currently adopted by Herriman City for use in the municipal right-of-way. All signs and traffic control devices shall be designed according to the latest editions of the Manual on Uniform Traffic Control Devices (MUTCD) and the specifications set forth in APWA Section 32 01 05 and 32 01 06.

2. The Developer shall install all information signs and traffic control devices required in the development. All signs and traffic control devices shall be designed according to the latest editions of the Manual on Uniform Traffic Control Devices (MUTCD) and APWA 32 01 05. The Developer shall pay all installation, material, equipment and labor costs associated with installation of the signs and traffic control devices. Sign and traffic control device costs shall be included in the bond for improvements of the development and will not be released until either installed by the developer or until payment for costs incurred by Herriman City has been made.

3. All public and private streets shall have a street name sign. Street name signs shall be green on public streets, and blue on all private streets.

4. Decorative caps and bases shall be provided on all signs on collector streets and streets in HTC, public or private. Dome rain caps are required on all other signs.

4.07 Traffic Signing, Striping, and Control Plan Design

1. All traffic signing, striping and traffic control plans shall be submitted to City Engineer for review and approval prior to field installation.

2. Follow the requirements given in the latest version of *A Policy on Geometric Design of Highways and streets,* from the American Association of State Highway and Transportation Officials (AASHTO).

3. Follow requirements given by Utah Department of Transportation on standard drawings for road and bridge design.

4. All traffic signing, striping and traffic control plans shall be designed and installed according to the current Manual on Uniform Traffic Control Devices. (MUTCD)

5. Traffic signing, striping, and control plans shall consider the following issues, at a minimum:
   a. Recommendations made in the traffic impact study.
   b. The functional classification of the specific roadway(s).
   c. Existing and proposed conditions relative to traffic volumes, lane widths and configurations, storage and taper lengths, grades, streets, and driveways.
   d. The speed limit(s) desired by Herriman City, of proposed roadways.
   e. The posted speed limit(s) of nearby existing road(s) that will allow access to the future development.
   f. Construction phasing.
   g. Sight distance.
   h. Location, size, and placement that maximizes safety and operation.
   i. The Herriman City Transportation Master Plan map and *Standard Plan No. RD-01A, RD-01B and RD-01C.*
   j. Bicycle and pedestrian mobility and safety.
   k. ADA compliance.
   l. Signal timing (if applicable).
   m. Transitions to existing features.
   n. Impacts to neighboring developments and the environment.

6. Submitted signing and striping plan shall be submitted for City review and approval. All plans submitted must follow proper standards according to the MUTCD and address at a minimum the following:

   a. Intersection (striping)
      a) Cross Walks
      b) Stop Bars
      c) Turning Lanes and Turn Arrows

d) Traffic Lanes

b. Roadway (striping)
   a) Roadway Lanes
   b) Shoulders
   c) Tapers

c. Signs. All regulatory and warning signs to be shown on submitted plans according to current MUTCD requirements.

4.08 Streetlight Design

4.08.01 Placement

Residential streetlights shall be placed on alternating sides of the street at a minimum of 175 feet with a maximum of 225 feet staggered design for local and minor collector roadways. Arterial streetlight shall be placed at 125 feet staggered design maximum for major collectors and arterial roadways. Additionally, one streetlight shall be required at each road intersection, mid-block crossings, and at the end of each cul-de-sac. Streetlights should be placed at lot line boundaries to avoid unnecessary obstruction along the property frontage. Occasionally, and with approval of the City Engineer, the case may require a streetlight to be placed at a location other than at the property boundary. The City Engineer may require additional or fewer streetlights based on a lighting study provided by the owner or developer. Additional streetlights may be required in locations where safety hazards or special traffic needs exist. Refer to *Standard Plan No. SL-06*.

4.08.02 Residential Streetlights

Use Herriman City residential style lights on all private or public local and minor collector roadways. See *Standard Plan No.'s SL-01, SL-01A, SL-07* and *SL-08, SL-08A*. Residential streetlight system shall be 8 awg minimum, with the exception of 12 awg minimum allowed in streetlight pole. Transition from 8 awg to 12 awg shall be in a junction box. See *Chapter 5* for more detailed information.

4.08.03 Arterial Streetlights

Use Herriman City standard arterial streetlights on all roadways with a right-of-way greater than sixty-eight feet (68'). See *Standard Plan No.'s SL-02, SL-02A, SL-09, SL-10, SL-11* and *SL-11A*. See Herriman Standard Specification *Section 26 56 19 Roadway Lighting* for more detailed information.

1. All arterial streetlights systems shall be a four wire, 6 awg,240 Volt 100-amp system with a power meter enclosed Stainless Steel MPS-A16-10K Strong

Box. If sprinkler box is required, use box MPE-A16-10K as manufactured by Strong Box, or approved equal. See *Standard Plan No.'s SL-12* and *SL-12A*

2. No more than 6 streetlights shall be daisy chained together with a 240 Volt 30-amp breaker.

3. All splices shall be wire crimped and heat fused with covering and terminated in a junction box Carson L 1419-12 Green St Lgtg HBlt.

4. Any junction within 150' of any intersection shall be Carson H 1324.

5. Where designated by City Engineer, all lights installed along rights-of-way 106' or larger shall be equipped with Pole-Safe Model 4075 breakaway support system.

6. All poles shall be wired with a 120 volt, GFCI plug in receptacle, powered through photocell. 12 awg wire, minimum, allowed in the streetlight pole. Transition from 6 awg to 12 awg shall be in junction box, adjacent to pole.

4.08.04 **Towne Center Streetlights.**

Streetlights in the Towne Center shall conform to *Standard Plan No. SL-01A.*

4.08.05 **Post Top Bridge Streetlights**

Bridge streetlights shall be placed and installed atop each pre-cast fence post. See *Standard Plan No. SL-01B.*

4.09 On Site Lighting.

The provisions of this chapter shall apply to all on-site outdoor artificial illuminating devices, outdoor fixtures, lamps and other devices, permanent or portable, used for illumination or advertisement. All outdoor illuminating devices shall be installed in conformance with the provisions of this chapter as well as with all other provisions of the Herriman City Zoning Code and the Building Codes, as these are later amended and as applicable.

1. Such devices shall include, but are not limited to search, spot, or flood lights, and other fixtures to illuminate structures and facilities such as:

    a. Buildings and structures.
    b. Recreational areas.
    c. City Parking Lots. See *Standard Plan No.'s SL-03* and *SL-03A*.

d. Retail Parking Lots. See Sta*ndard Plan No.'s SL-04, SL-04A, SL-05, SL-5A* according to their particular use.
e. Bridges. See *Standard Plan No. SL-01B*.
f. Landscape areas.
g. Billboards and other signs (advertising or other).
h. Lighting for gas station canopies and other similar uses.
i. General areas and yards (including security lighting and lighting for the convenience of customers, patrons, visitors, and so forth).

2. Every outdoor light source shall be so operated that it does not emit a beam or intense glare beyond the property boundary. Such lighting shall be operated in a way that it is directed away from and shielded from any adjacent property and shall not detract from driver visibility on adjacent streets. Compliance is achieved with fixture shielding, directional control designed into the fixture, fixture location, fixture height, fixture aim, or a combination of these factors.

3. All exterior illuminating devices, except those devices exempt from this section, shall be fully or partially shielded as required.

4. Lamp types for outdoor use shall be LED. The initial output, as defined by the manufacturer, is the value to be considered. For determining compliance, the light emitted from outdoor light fixtures is to be included in the total output as follows:

   a. Outdoor light fixtures installed on poles (such as parking lot luminaries) and light fixtures installed on the sides of buildings or other structures, when not shielded from above by the structure itself as defined in paragraphs below, shall be included in the total light output.

   b. Outdoor light fixtures installed under canopies, building overhangs, or roof eaves where the center of the lamp or luminaire is located at least five feet but less than ten feet from the nearest edge of the canopy or overhang shall be included in the total outdoor light output.

   c. Outdoor light fixtures located under the canopy and ten or more feet from the nearest edge of a canopy, building overhang or eave are to be included in the total outdoor light output as though they produced only $1/10^{th}$ of the lamps initial rated lumen output.

5. Total outdoor light output (excluding streetlights used for illumination of public right-of-way) of any commercial development project in Herriman City shall not exceed 2.5-foot candles with a maximum to minimum ratio of 4 to 1 over the entire project. Commercial projects must utilize semi cutoff with top shields or cutoff type fixtures.

6. The following requirements shall apply to canopies:

    a. All luminaries mounted on the under surface of service station canopies shall be fully shielded and utilize flat glass or acrylic covers.
    b. The total light output shall not exceed 5 foot-candles averaged under the footprint of said canopy at finished grade. Luminaires mounted on the lower surface of the canopy and auxiliary lighting within signage or panels over the pumps shall be included in the above.

7. The provisions of this chapter are not intended to prevent the use of any material or method of installation that is not specifically prohibited by this section, if any such alternate has been approved by review of Herriman City. The City Engineer may approve any such alternate as long as the proposed design, material or method provides equivalence to those specific requirements of this chapter or is otherwise satisfactory and complies with the intent of this chapter.

8. Where exterior lighting is installed on property outside the public right-of-way, lighting shall be so arranged as to reflect the light away from adjoining premises; exterior lighting shall not create a nuisance for adjacent property owners or inhabitants. Furthermore, lighting shall be arranged so as to not create a traffic hazard.

9. Exterior lighting may be provided by a freestanding fixture in the yard space between buildings or structures and the public right-of-way or attached to the wall of a building or structure where the distance from the wall to the public right-of-way is not more than 30 feet.

10. Style of the lighting fixtures and the locations of the fixtures shall be approved by the Herriman City Planning Commission.

11. Each off-street parking area on residential structures may be illuminated for safety by installing lighting fixtures which emit light at least equivalent to that

of one 100-watt incandescent bulb per 100 feet in all directions. All lighting shall be shielded so as not to shine into surrounding residences.

4.10 Grading & Drainage Design

Grading and drainage shall be designed according to the requirements listed below.

1. Fill slopes shall be no steeper than 3 horizontal to 1 vertical (3:1), or as determined by a soils engineer. All fills shall be compacted to a minimum of 95 percent of maximum dry density, unless otherwise approved by the City Engineer at locations in which a lesser density would be needed to accomplish infiltration and would otherwise be appropriate. Maximum dry density shall be measured per AASHTO T-180.

2. Cut slopes shall be no steeper than 3 horizontal to 1 vertical (3:1), or as recommended by a geotechnical engineer.

3. If retaining wall structures are required between lots or on the perimeter of the project, the retaining structure will need to be installed as part of property development and bonded with the plat and will require a wall permit. The plat shall designate who owns and is responsible for the wall. Retaining wall structures equal to or over 4 ft. shall be permitted and engineered with appropriate plans and details and according to the permit requirements.

4. All building pads at rough grade shall have a minimum 1% slope from the pad towards the street or designed drainage outlet.

5. Test holes shall be dug at a location which represents the development site adequately to determine the depth of the groundwater table. A preliminary soils investigation and groundwater report shall be submitted to the City Engineer. If the City Engineer determines that groundwater is a problem, a lateral to each lot for footing or foundation drains, shall be installed to city specifications. All land drains must be tied into approved storm drain facilities.

6. The minimum finished slope of any designed grade shall be 2% for unpaved areas, 1% for asphalt, and 0.5% for concrete.

7. Subsurface drainage systems shall be of adequate capacity to intercept and convey the drainage so as not to detrimentally affect adjacent properties or public infrastructure.

8. The developer shall investigate the existing and proposed use of any irrigation ditch or canal within the project limits to determine if they are to be perpetuated. It is the responsibility of the developer to contact the water right holders, their legal representative, or the Irrigation Company to obtain their requirements and approval for protection of the irrigation system or approval for all construction related to piping or covering an irrigation ditch or canal. All design for piping or covering a ditch or canal shall be in accordance with Herriman City Standards and sound engineering practice. Developer shall be responsible to obtain written approval of any proposed improvement plans to the private irrigation system from the irrigation company.

9. The discharge of stormwater into irrigation ditches shall not be allowed without special approval from the City and the Irrigation or Canal Company. If an irrigation ditch is to be used as a stormwater receptor, a written agreement must be secured from the Irrigation Company that the company will accept responsibility for receiving the water. If the City and the Irrigation Company approve, a hydraulic investigation shall be required to demonstrate the ditch or canal's capacity to accept the storm drainage.

10. Private or public runoff or water shall not be discharged onto or through another property without the appropriate easement. An easement with the right of access conveyed in favor of the property owner creating or conveying the runoff shall be provided. Easements shall comply with part 3.04.

11. In the event that proposed construction shall direct surface or stormwater runoff to properties or facilities owned and maintained by agencies other than the City, written proof of permission or approval from these agents must be provided prior to acceptance of drainage concepts and subsequent issuance of City drainage approval.

12. All fill material within a public right of way must be Granular Borrow meeting the most recent version of APWA standards for Common Fill, with specified lift heights by the engineer of record or according to the geotechnical report.

It is City policy and the developer's responsibility wherever possible to restore, protect and maintain the chemical, physical, and biological integrity of City and State waters and to restore their beneficial uses.

4.11 Storm Drain Design for Flood Control

All storm drain systems shall be designed to the requirements listed below.

4.11.01 **Hydrology**

1. Storm drain systems shall be designed to handle the governing storm event and comply with the city's stormwater master plan.

2. Pipe systems shall be designed to convey the 10-year frequency storm.

3. Detention ponds shall be designed to detain the 100-year storm whose duration creates the greatest detention volume need.

4. The 100-year storm shall be routed by streets or other facilities in the development. Provide cross section showing proposed grades of adjacent lots, including basements.

5. The precipitation depths for Herriman may be obtained from the National Oceanic and Atmospheric Administration (NOAA) Atlas 14 website found at NOAA

4.11.02 **Detention Basins**

1. All developments are required to limit the peak flow rate by means of detention pond(s). Each development's peak flow shall be restricted prior to connection to the public system, natural or engineered drainage channels, or Salt Lake County flood control facilities (i.e., Midas Creek, Copper Creek, Rose Creek, Wood Hollow, Butterfield Creek, and any other designated facilities by Salt Lake County Flood Control).

2. Detention capacity must be provided to limit the peak discharge rate in the design storm to the flowrates listed in the most recently adopted version of the Storm Drain Master Plan.

3. When additional retention is required because of water quality standards, flow out of the development must still comply with maximum discharge requirements. Volume used to comply with water quality requirements shall not count toward water quantity requirements.

4. Developer shall comply with local, state and federal requirements for stormwater pollution prevention.

5. Detention basins shall be either on a separate lot which complies with the Herriman City Zoning Ordinance or when approved by the City Engineer within an easement dedicated to Herriman City which is part of a legal lot.

6. All detention facilities must be designed to safely and reliably accommodate an emergency overflow that safely conveys flood waters to a nearby street or other acceptable facility.

7. The use of pumps to drain detention facilities will not be allowed unless otherwise approved by the City Engineer.

4.11.03 **Retention Basins**

1. Retention ponds for quantity control purposes shall not be allowed, unless approved by the City Engineer. Retention ponds, if allowed, shall be designed to hold the 24-hour duration, 100-year frequency storm event. All ponds shall be designed with a minimum of one foot of free board.

4.11.04 **Detention and Retention Basin Design Criteria**

Detention and retention basins shall be designed to provide the following:

1. Side slopes of 3:1 maximum. Steep slopes may be approved with engineered decorative retaining structures such as rock wall.

2. All ponds shall be landscaped and irrigated according to most recent version of the Herriman City Standards & Specifications Manual, including but not limited to the *Water Efficiency Standards (Appendix G).*

3. Asphalt or concrete maintenance access road for vac truck (66,000 lbs.) shall be provided to all cleanouts and inlet/outlet structures (min 10-foot width). Adjacent roadway may serve as maintenance access to cleanouts if it is at similar grade as the adjacent road and within 30 ft horizontally from the curb and gutter. Maintenance access road shall extend to the bottom of the basin to access the inlet and outlet structures. Maximum slope of the maintenance road shall be 12%. Minimum radius of the access road shall be 25 ft.

4. Lots with ponds on them shall provide normal frontage requirements.

5. All detention/retention lots or easements shall be properly surveyed, and corners permanently marked prior to acceptance of improvements.

6. No flag lots shall be used for detention or retention facilities.

7. Detention basins shall have low flow through design which eliminates "wet basin." Low flow shall be conveyed by a piped system. A 12 inch diameter pipe is allowed for low flow conveyance. A detention facility with a subsurface component may not be required to provide a low flow system.

8. Cross slope within basin shall provide adequate drainage. That is, the minimum slope shall be 2% grade. A land drain system throughout the bottom of the pond shall be included if less than 2%. Under no circumstances shall the slope be less than 1% across any portion of the basin.

9. If possible, ponds for multiple areas or phases in a development shall be combined as long as the current construction phase is stand alone and doesn't depend on future pond construction.

10. The Herriman City Parks Department may require additional grading or different slopes, planting or layout of the pond to make better use of the space or for more efficient long-term maintenance or use of the basin.

11. A pre-treatment facility shall be required, in-line, and upstream of any flood control facility that is subsurface. The pre-treatment facility BMP shall be capable or removing a minimum of 80% Total Suspended Solids (TSS).

12. The pond shall have a 10 ft wide rim along the top along areas where the adjacent grades are lower than the pond rim.

13. Detention pond inlets and outlets shall be designed in-line with the general direction of flow through the pond. In other words, bubble-up inlet/outlets are not allowed.

14. Any retention facility intended for future conversion to detention shall include design for such conversion in the improvement drawings and labeled as future improvements.

15. All detention facilities with a bottom footprint of 5,000 sq.ft. or more shall be designed such to accommodate active space for recreational purposes.

16. Water quality improvements and volume (outlined in Section 4.12) placed in a detention basin shall be designed and constructed such that it doesn't impede active or recreational activities that would otherwise be accommodated in the detention facility. For example. design accommodation may include a subsurface chambered facility.

4.11.05 **Stormwater Pipes**

1. Storm drainpipe material shall be Class III RCP or corrugated double wall, smooth interior high performance polypropylene (PP) pipe.

2. HDPE pipe smaller than 24-inches in diameter may be considered in areas outside of the municipal Right-of-Way or in non-traffic load bearing applications and if approved by the City Engineer.

3. Pipe size shall be determined by required capacity, but in no instance shall the size of mainline pipe be less than 18" diameter. The minimum size of pipe laterals from inlets is a 15" diameter. Underdrain pipes may be smaller as determined by required capacity.

4. Velocity in storm drain pipelines shall range between 2½ feet per second minimum to 15 feet per second maximum when flowing half full while maintaining a minimum slope of 0.5%

5. Vertical clearance between other utilities shall be at least 18 inches. Closer tolerances require reinforcement concrete cradle or other acceptable separation. Trench materials of other utilities must be preserved and any disturbance to the bedding or backfill of other utilities must be restored. The horizontal minimum clearance (edge of pipe to edge of pipe) shall be 3 feet.

6. Steel access protection rack shall be called-out for installation on all flared end sections. Maximum width between grates shall be 6 inches.

4.11.06 **Stormwater Manholes, Cleanout Boxes and Catch Basins**

1. Storm Drain manholes shall be four-foot (4') diameter for in-line manholes where grade changes occur. Five foot (5') diameter manholes are required when deflection angle is greater than or equal to 45 degrees, when the manhole is a junction manhole of three or more lines, for pipe whose inside diameter is twelve inches (12") or greater, or when the cover above invert elevations is 14 feet or greater.

2. Storm Drain manhole spacing shall be 400 feet maximum. Clean out boxes will be located before stormwater is discharged into existing facilities. No storm drains manholes, cleanouts, or catch basins are to be placed in driveways, pedestrian ramps, pedestrian crosswalks, or within the radius of corners at intersections.

3. Cleanout boxes shall be placed:
   a. Not more than 400 feet apart.
   b. At every change in alignment or slope.
   c. At junctions with other lines.
   d. Such that the invert of all pipes entering cleanouts shall never be below the invert of the pipe leaving the cleanout.
   e. Maximum tributary area of a cleanout box shall be 2 acres.

4. Catch basins shall be placed:
   a. No more than 400 feet apart on each side of the road. If a greater spacing is proposed, it must be substantiated by calculations demonstrating that the spread doesn't encroach into the travel lane and approved by the City Engineer.
   b. At all low points. Drainage study shall show if more than one inlet is required.

5. Inlet capacity shall be calculated in areas with roadway slopes equal to or greater than 8%. Drainage Report shall indicate that the stormwater system is capturing the 10 year event and meeting the design criteria requirements of this section

6. All storm drain manholes, cleanouts, and sumps shall meet confined space requirements and shall be equipped with ladder rungs spaced at 12 inches and other such devices as required to ensure public safety.

7. All storm drain manholes are required to have legal and physical access. Physical access shall consist of an all-weather surface sufficient to provide for the needs of all routine maintenance and repair equipment.

4.12 Storm Drain Design for Water Quality

Flood Control and Water Quality are two separate functions of the Storm Drain system and have different standards. All storm drain systems shall be designed to the requirements listed below to address Water Quality.

1. The governing storm event for Water Quality is the 80th percentile storm. The 80th percentile rainfall event is the event whose precipitation total is greater than or equal to 80 percent of all storm events over a given period of record. Herriman City has further defined the 80th percentile precipitation depth as the first 0.50 inches of rainfall.

2. The Water Quality Volume (WQV) is defined as the volume of runoff generated over a 24-hour period during the 80th percentile storm event.

3. For all new development projects, rainfall must be managed on-site to prevent the off-site discharge of the precipitation from all rainfall events less than or equal to the 80th percentile rainfall event, when feasible. Infiltration shall be the primary option for managing the WQV. Evapotranspiration and harvesting may also be considered provided calculations account for seasonal variations in conditions.

4. It shall be considered feasible to infiltrate if the following criteria are met:
    a. The bottom of all retention facilities is at least 5 feet above the established water table at the project site.
    b. All standing water shall be dissipated within 48 hours of the end of the storm.
    c. Infiltration will not be allowed within 20 feet horizontally of all structures and foundations, unless demonstrated that saturated soils will not be detrimental to those structures and is approved by the City Engineer.
    d. Infiltration will not be allowed within 50 feet of live streams or water bodies.
    e. Infiltration will not be allowed if a land drain system is required.
    f. Infiltration will not be allowed in a drinking water source protection zone 1 or zone 2.
    g. Infiltration will not be allowed within 15 feet horizontally of a septic tank drain field.
    h. The location of the proposed infiltration is readily accessible by a rubber-tired backhoe.

i. A geotechnical investigation will be required to access the following:
   i. The appropriateness of infiltration on sites with clay and silty soils
   ii. Appropriate locations for infiltration on sites with slopes exceeding 20%.
   iii. If there are any potential geological hazards associated with infiltrations.
   iv. The appropriate road or parking lot (pavement) cross-section if infiltration is closer than 5 feet horizontally from any proposed pavement surfaces.

5. If it is not considered feasible to infiltrate the full WQV, the Water Quality Report will identify the volume being infiltrated and describe what measures will be taken to clean the remainder of the WQV and minimize releasing of potential pollutants in to the City's storm drain system or Waters of the State. Long-term BMPs that filter or treat and then release stormwater shall be applied to the volume of the WQV that cannot be infiltrated or reused on site.

6. Only the volume of stormwater below any underdrains may be considered towards the required infiltration volume.

7. The WQV shall be determined as outlined in *"A Guide to Low Impact Development Within Utah"* as prepared for the Utah Department of Environmental Quality, Division of Water Quality, Stormwater/UPDES/DWQ-2019-000161.pdf with the exception that the 80th percentile precipitation depth shall be used in place of the 90th percentile.

8. When sizing facilities that infiltrate the following table may be used to determine appropriate infiltration rates:

NRCS Hydrologic Soil Group	Typical Soil Texture	Saturated Infiltration Rate (in/hr)
A	Sand	8.00
A	Loamy sand	2.00
B	Sandy loam	1.00
B	Loam	0.50
C	Silt loam	0.25
C	Sandy clay loam	0.15

NRCS Hydrologic Soil Group	Typical Soil Texture	Saturated Infiltration Rate (in/hr)
D	Clay loam and silty clay loam	<0.09
D	Clay	<0.05

[Taken from *Design of Urban Stormwater Controls,* page 367]

9. In lieu of the simplified table approach described above, soil infiltration rates can also be determined using on-site infiltration testing per ASTM D5856.The median rate determined from in-situ measurements shall be reduced by a factor of 2.5 and this reduced value used in design calculations. This reduction accounts for incidental compaction during construction and sedimentation of the subgrade over time. Infiltration rates used in calculations shall be approved by the City Engineer.

10. The following table outlines design criteria to be used for facilities whose primary function is <u>infiltration</u>:

Design Parameter	Unit	Basins and Trenches	Galleries	Permeable Pavement	Dry Well	Hybrid Bioretention/ Dry Well
Design Water Quality Volume	cubic feet	See part 4.12				
Design Surface Drawdown Time	r	48				
Setbacks and Elevations	feet	In accordance with the Infiltration Feasibility Criteria, part 4.09.4				
Pretreatment	-	Appropriate Treatment Control Measure shall be provided as pretreatment for all tributary surfaces other than roofs				
Hydraulic Conductivity, K_{sat}, measured	in/hr	In accordance with part 4.12				
Factor of Safety, FS	-	5 if using assumed NRCS infiltration rates for K_{sat} 2.5 if using field measurements (ASTM D 5856) for K_{sat}				
Facility geometry	-	Bottom slope ≤ 3% (basins);	Flat bottom slope	Pavement slope ≤ 5%; If ≥ 2%,	Typical 18 – 36-inch diameter; flat	Bioretention: Bottom slope ≤ 3%; side slope

Design Parameter	Unit	Basins and Trenches	Galleries	Permeable Pavement	Dry Well	Hybrid Bioretention/ Dry Well
		side slope shall not exceed 3:1 (H:V)		area shall be terraced	bottom slope	shall not exceed 3:1 Drywell: flat bottom
Ponding Depth	inch	18 (maximum)[a]				
Media Depth	feet	2 (min) 8 (max)	-	2 (min) 8 (max)	-	2 (min) 8 (max)
Gravel media diameter	inch	1 – 3	-	1 - 2	3/8 – 1	3/8 - 1
Inlet erosion control	-	Energy dissipater to reduce velocity				

11. The following table outlines design criteria to be used for facilities whose primary function is filtration and releasing:

Design Parameter	Unit	Rain Garden	Planter Box	Bio-infiltration	Vegetated Swale	Filter Strip
Water Quality Volume, WQV	cubic feet	See part 4.12				-
Design Drawdown Time	hr	48			-	-
Factor of Safety	-	3			-	
Soil Media Infiltration Rate	in/hr	5 (max)			-	
Design Contact Time	min	-			≥ 7	
Slope in Flow Direction	%	-			1% (min) 6% (max)	2% (min) 33% (max)
Design Flow Velocity	ft/sec	-			≤ 1	

Design Parameter	Unit	Rain Garden	Planter Box	Bio-infiltration	Vegetated Swale	Filter Strip
Maximum Ponding/Flow Depth	inch	18	12	18	5	1
Minimum Width	ft	2			2	15
Soil Depth	ft	2 (3 preferred) Topped with 3″ of mulch			2	-
Underdrain	-	Slotted PVC pipe embedded in 12″ gravel section and located 1″ from bottom of facility		Slotted PVC pipe at least 2′ above bottom of facility	N/A	Not required
Overflow Device	-	Required if system is on-line and does not have an upstream bypass structure. Shall be designed to handle the peak storm flow in accordance with the Building and Safety code and requirements				

12. Protection against floatables must be designed for all flows that are discharged from the project site, even flows that exceed the WQV.

13. All Long-term stormwater BMPs shall be designed to conform with Herriman City Standards.

14. Above ground retention facilities may not be counted toward open space requirements.

15. Playgrounds shall not be installed in above ground retention facilities.

16. Volume used to comply with water quality requirements shall not count toward water quantity requirements.

17. All developments are strongly encouraged to consider incorporating multiple LID practices on any given development. LID practices have proven to be most successful when applied to limited drainage areas as close to the source as possible.

18. All developments are also encouraged to implement non-structural BMPs when possible. These non-structural practices include but are not limited to eliminating directly connected impervious areas, minimizing disturbed areas, reducing impervious area footprints. Although these practices do not count directly toward the water quality volume, they will tend to reduce the total water quality volume for the project.

19. The following LID practices will not be allowed within the public right-of-way or on public property: porous asphalt, porous concrete, porous pavers, and open infiltration basins. These LID practices may be considered and allowed on private property and as part of private development as approved by the City Engineer.

20. All LID practices should have a clearly defined and delineated boundary. This may include curb walls, hard scaping, or other permanent boundary.

21. All LID practices should be groomed, manicured and well maintained.

22. All LID practices, when incorporating vegetation, should include vegetation that is relevant and appropriate. Weeds and invasive species are not considered relevant and appropriate. Water wise vegetation that grows well in the northern Utah climate is encouraged.

23. Where possible, LID practices should incorporate processes that mimic the natural water cycle.

24. A Stormwater Quality Report shall be completed, stamped by a professional engineer and included in the project Drainage Study as outlined in 2.10. A template of the Stormwater Quality Report is included in Appendix J .

25. Projects that have been approved for retention for water quantity control purposes, due to lack of access to the public system, are required to design and install water quality stormwater infrastructure. This will allow conversion of the retention facility to detention at a future time without compromising the project's ability to comply with water quality requirements.

4.13 Culinary & Secondary Water Requirements

Culinary and secondary water systems shall be designed according to the following requirements listed below and shall comply with AWWA requirements.

4.13.01 **Pipe Material**

Pipes 12 inches and smaller shall be PVC; larger pipes shall be ductile iron. HDPE pipe may be used with specific approval by the City Engineer.

4.13.02 **Valves**

All valves 12 inches and smaller shall be gate valves, valves larger than 12″ may be butterfly or gate valves.

4.13.03 **Isolation Valves**

Place isolation valves as follows:

1. At the boundaries of land developments

2. At the boundaries of phases within a land development that will be constructed at separate times.

3. At intervals not to exceed 800 feet.

4. In all intersections and shall equal the number of legs of the fitting.

5. Within 100 feet of the upstream and downstream ends of an augured or trenched casing.

6. Within 100 feet upstream and downstream of a PRV.

7. No more than 500 feet intervals in commercial subdivisions or districts.

8. No more than 1 mile interval where the system serve widely scattered customers and where future development is not expected.

Where possible, place isolation valves in clusters.

4.13.04 **Crossings**

Utilities crossing the water main shall do so at as close to a right angle as possible. Rather than placing them on a skew greater than 45°, modify the alignment to allow a more perpendicular crossing. A vertical clearance of 18″ between pipes is required.

4.13.05 **Underwater & Open Channel Crossings**

1. A Minimum cover of 4 feet or greater shall be provided over the pipe.

2. When crossing water courses that are greater than 15 feet wide, the following shall be provided:

a. Pipe with joints shall be of special construction, having restrained joints for joints within the surface water course and flexible restrained joints at both edges of the water course.

b. Isolating valves shall be provided on both sides of the water crossing at locations not subject to high ground water or flooding, so that the section can be isolated for testing or repair.

c. A means shall be provided, such as a sampling tap, not subject to flooding, to allow for representative water quality testing on the upstream and downstream side of the crossing.

d. A means shall be provided to pressure test the underground water crossing pipe.

e. A concrete pad, installed over the pipe section, shall be designed to protect from erosion of the pipe zone.

4.13.06 **Casing Requirements**

Casings shall be a minimum of 4" larger than outside bell diameter of the pipe. There shall be no mechanical joints within 10' of a crossing. Welded steel pipe shall be used for casings. Spacers shall be two-piece spacers made of stainless steel with UHMW or similar material. Casing end seals shall be used to prevent debris, soils and seepage from entering the casing. See Trenchless Utility Installation in Chapter 5 for more detailed information.

The steel pipe casing shall be jacked under railroad tracks, highway or Interstate using methods submitted to the City Engineer for review.

Steel pipe casing shall be installed by open cut under canals. These installations shall be as per details approved by the canal company.

4.13.07 **Well Abandonment Requirements**

Comply with the requirements of the Utah Administrative Code. Any development with an existing well(s) within the development, must abandon the well(s), unless specifically approved by the City Engineer.

4.13.08 **Water Facility Doors**

Any water facility that has walk-in doors shall be equipped with Primas locks with approval from Herriman City Municipal Water Department.

4.14 Culinary Water Design

Culinary water systems shall be designed according to the following requirements listed below, and as shown on *Standard Plan No.'s CW-01 to CW-15*. All Herriman City culinary water components shall comply with AWWA requirements. All plans of public and private improvements shall comply with fire flow requirements of the International Fire Code.

4.14.01 **Alignment**

Standard centerline alignment within the public right-of-way shall be 10 feet north or 10 feet west of the centerline of the roadway. Alignment shall be designed so it is outside of the travel lane wheel path. With the exception of sewer, outlined in part 4.14.05, horizontal clearance between water and all other utilities, public or private, shall be a minimum of 3 feet (edge of pipe to edge of pipe).

4.14.02 **Mainline Diameter**

The minimum line size shall be 8 inch. Actual flows must be modeled to ensure that minimum sizes are adequate for normal flow requirements as well as when some looping lines are out of service. Sizes are subject to engineering review.

4.14.03 **Maximum Pressure**

A Pressure Reducing Valve (PRV) and vault assembly, per Herriman City Standard Plan CW-07 and CW-07A, shall be required when the static pressure exceeds 150 psi or to reduce operating pressure to Herriman City designated pressure zones, whichever is more stringent.

4.14.04 **Buried Pipe Material**

Blue Polyvinyl Chloride Pipe (PVC) C900 or C909 shall be used for buried pipe sizes 12 inches and smaller. Ductile iron pipe PC-350 or CL-52 shall be used for buried pipes larger than 12 inches.

4.14.05 **Water and Sewer Separation Standards**

1. The horizontal distance between waterlines and sanitary sewer lines shall be at least 10 feet. Where a water main and a sewer line must cross, the water main shall be at least 24 inches above the sewer line separation distances shall be measured edge-to-edge (i.e. from the nearest edges of the facilities).
2. Water mains and sewer lines shall NOT be installed in the same trench.
3. Where local conditions make it impossible to install water or sewer lines at separation distances require by subsection (a), an exception to Utah State Rule R309-550-7 must be submitted and approved by the Utah State Division of Drinking Water.

4.14.06 **Service Laterals**

1. Service lines shall be a minimum of one-inch (1″) diameter IPS polyethylene pipe. IPS material shall not be used for 3 inch (3″) laterals. All sizes greater than 2 inches (2″) shall be PVC.
2. Location of water service shall be located in the center of the lot or as approved by the City Engineer. However, if the driveway locations are known, water service shall be placed on the wide side of the lot.
3. No meter box shall be allowed in any driveway, driveway flare, or sidewalk, unless allowed by the City Engineer. If allowed, a traffic rated meter vault may be required with a manhole style lid. The property owner shall be responsible for any cost to repair or replace hard surface.
4. Services shall be installed as shown on *Standard Plan No. CW-01*.
5. Service lines for multi-family units shall be sized to ensure adequate flow and pressure per the latest version of the IRC. City engineer may require additional analysis from the developer or builder's engineer to indicate compliance with the IRC.

4.14.07 **Meters**

1. Each single-family dwelling shall be serviced by a separate meter. Unless otherwise approved by the City Engineer, a separate culinary water meter shall be installed for each individual owner of each single-family dwelling.
2. A single ownership apartment building may have one meter per building as approved by the City Engineer and water demands must be calculated to ensure adequate flow and pressure are in accordance with the latest version of the IRC.
3. Unless approved by the City Engineer, all multi-family developments and single-family attached communities shall be serviced by a master meter. Master meters shall be sized to adequately handle the governing flow as indicated in the Water Report. The number of master meters shall equal the number of connections required for the development. Fees will be based on the size of the meter and the number of meters necessary to meet hydraulic requirements as outlined in the Water Report.
4. A separate meter shall be installed for irrigation use, independent and in addition to the meter for indoor use. This shall be required for all land uses except for single-family residential.

4.14.08 **Fire Hydrants**

Fire Hydrant spacing shall not exceed 300 feet in areas of multi-family dwellings, and in commercial and industrial use areas. In single family dwelling use areas and along all arterial and collector roads, hydrant spacing shall not exceed 500 feet

(as measured by the distance a hose could be laid) or the latest version of the International Fire Code, whichever is the most stringent. All drawings shall refer to or include the *Standard Plan No. CW-15*.

1. All valves for fire hydrants shall be located in the street flanged off of the tee.
2. If a fire hydrant lateral is not off a tee, then the isolation valve shall be located a minimum of 20 feet from the hydrant.
3. No water services shall be allowed between the hydrant valve and the hydrant
4. A minimum of 3' is required between a fire hydrant, other utilities, or obstructions.
5. Fire hydrants are required at the end of all cul-de-sacs.
6. See *Standard Plan No. CW-15* for additional location requirements.

4.14.09 **Sampling Stations**

All developers are required to install a sampling station for every 80 lots or one per development for developments smaller than 80 lots. Sampling Stations shall be installed as shown on *Standard Plan No. CW-10*.

4.14.10 **Looping**

Looped water mains shall be required where feasible in order to limit flow velocity, prevent stagnation, preserve pressure, and limit the extent of outages when water mains must be out of service for maintenance or repair.

A dead end line shall not have more than 20 connections or longer than 600 ft, whichever is more stringent, otherwise a looped connection shall be required.

The City Engineer may require additional looping in cases where dead end lines may result in stagnation due to low demand or cases in which continual water service is essential to critical infrastructure.

4.14.11 **Dead Ends**

A fire hydrant, as shown on *Standard Plan No. CW-15*, shall be required at all dead-ends. A temporary blow off, as shown on *Standard Plan No. CW-14* may be allowed at dead-ends caused by phase lines. Flushing devices shall be sized to provide flows of which will give a velocity of at least 2.5 feet-per-second in the water main being flushed. No flushing device shall be directly connected to any sewer or storm drain. Per Utah State Division of Drinking Water requirements, all blow offs and flushing hydrants shall be pre-manufactured.

4.14.12 **Water Model Report**

The State Division of Drinking Water (DDW) requires that new water systems are hydraulically modeled to ensure that they will meet the minimum requirements set forth by the state. The Water Model Report shall be completed by Herriman City based on the updated and approved city-wide water model.

The amount of fire flow used is dependent on the building construction type, building fire area, and the fire sprinkler system. The most current regulations set by the local fire authority and International Fire Code (IFC) shall be used to determine the governing fire flow for each building. The City will run as many fire flow scenarios needed to determine the governing flow and velocity through each pipe segment within the development. The Water Model Report will show the governing velocity of each pipe segment. It should also determine the allowances needed for seasonal and daily fluctuations as a result of increased demands or changes in the operation of the water system.

Report shall indicate pipe size requirements to meet project based demands. Additionally, the report shall also include pipe upsize from project based size requirements to meet city system demands outlined in the most updated Herriman City Water Master Plan.

4.15 Secondary Water Design

Secondary water systems shall be designed according to the following requirements and as shown on *Standard Plan No.'s SW-01, SW-03, SW-13 to SW-15 and SW-PL1 and SW-PL2*. All Herriman City Secondary Water components shall comply with AWWA requirements.

4.15.01 **Alignment**

All secondary water distribution mains within residential subdivisions shall be placed in roadway 2 feet from the lip of gutter and should be opposite of the storm drain where possible. See *Standard Plan No.'s RD-01, RD-01A, RD-01B, and RD-01C* for alignment designation. Alignment shall be designed to avoid the travel wheel path wherever technically feasible. If technically infeasible to design accordingly, then the alignment outlined in the Standard Plans reference in this paragraph shall govern.

Horizontal clearance between secondary water and all other utilities, public or private, shall be a minimum of 3 feet (edge of pipe to edge of pipe).

4.15.02 **Buried Pipe Material**

Purple Polyvinyl Chloride Pipe (PVC) C900 or C909 shall be used for buried pipe sizes 12 inches and smaller. Ductile iron pipe PC-350 or CL-52 shall be used for buried pipes larger than 12 inches.

4.15.03 **Mainline Diameter**

The minimum line size shall be 6 inch. Actual flows must be modeled to ensure that minimum sizes are adequate for normal flow requirements as well as when some looping lines are out of service. Sizes are subject to engineering review.

4.15.04 **Service Laterals**

1. Service laterals shall be one-inch (1″) diameter IPS polyethylene pipe. IPS material shall not be used for 3-inch (3″) laterals. All sizes greater than two inches (2″) shall be PVC.
2. Only one service lateral per lot shall be allowed.
3. Service connections shall be placed 5 feet from the culinary water service.
4. Service laterals and meter box shall be designed to eliminate bellies or low points and allowed to drain to mainline. See *Standard Plan No. SW-01.*
5. Multi-family developments may be serviced by a master meter as described in part 4.14.07.

4.15.05 **Design Criteria**

1. The distribution system shall be designed to maintain a minimum of 40 psi at all points of connection, under all conditions of flow, but especially during peak instantaneous flow conditions.
2. Slope water pipe and position drains at low points. Pipes must be designed to eliminate bellies or low points that will not drain.
3. Locate combination air release stations at the end of cul-de-sacs, on all dead-end pipes, high points within the system and as directed by the City Engineer.
4. A permanent blow-off shall be required at all dead end high points, and at the end of all cul-de-sacs. A drain shall be required at all low points and dead end low points.

4.15.06 **Cross Connections**

1. There shall be no physical connections, public or private, which would result in cross connections to any potable water main from secondary water mains.
2. No connections shall be made to any sewer, or appurtenances thereto, which could permit the passage of any wastewater or polluted water into the secondary supply.

4.15.07 **Isolation Valves.**

1. Isolation valves are required at phase boundaries. See part 3.02 regarding the delineation between public and private infrastructure.

4.16 Landscape Planting Design

All landscape planting plans shall correspond with their proposed irrigation plans to ensure proper integration of planting and irrigation design. Landscaping and irrigation design shall conform to the Water Efficiency Standards as provided in Appendix G. Plans shall be designed as specified herein and installed in accordance with *Specifications 32 84 23 (Underground Irrigation Systems) and 32 94 23 (Planting) of Chapter 5, Standard Specifications.*

4.16.01 **Drawings and Specifications.**

1. **Ordinances and Regulations.** All local, Municipal and State laws and rules and regulations governing or relating to any portion of this work are to be incorporated into and made a part of all plans and specifications and their provisions shall be carried out by the Landscape Architect and Contractors. Anything contained in these specifications shall not be construed to conflict with any of the ordinances and regulations of the City; however, these specifications take precedence over the requirement of said rules and regulations when they describe materials, workmanship or construction of a higher standard or larger size.
2. **Bonding and Inspection.** The landscape planting and irrigation system will be bonded as part of the entire development project. Bond releases will be handled through the Engineering Division. The city will sign off release(s) in the above areas only for 50% and/or 90% bond release.
3. **Materials.** Whenever any material (plant or park furniture or amenity, i.e., bench, table, etc.) is specified by name and/or model number, such specifications shall be deemed to be used for the purpose of facilitation of a description of the materials and establishing quality. No substitutions will be permitted unless approved by the Parks Department. Any substitutions shall be at least the same quality and size as those specified on the plans. All substitute materials shall conform to the requirements of these specifications.
4. **Change Documentation.** In the event of any proposed changes in plant and/or park amenity locations or type/brand, the Contractor shall immediately notify the Parks Department for approval prior to installation. The changes shall be noted on all sets of plans by the signature of the Contractor and an authorized City Official.

4.16.02 **Park Strips**

1. Park strips are required to have an approved landscape planting and irrigation plan. They are also required to be installed and maintained.
2. Orphaned park strips may be defined as any park strip within the public right-of-way (ROW) that borders along the rear yard of a private lot owner.
3. When allowed in a development, orphaned park strips shall be maintained by Herriman City.

4.16.03 **Tree Selection**

Proposed tree selection within Herriman City limits shall conform to the following requirements:

1. Trees within the public Right-of-Way or within areas otherwise owned by Herriman City shall include selections from the "Approved Tree List" provided in *Chapter 6*.
2. Trees not included on the "Approved Tree List" may be considered by the Parks Department if the tree cultivar is appropriate and suitable for the region. Any tree selection outside of the "Approved Tree List" is subject to Parks Department approval.
3. All park strip or parking lot island trees shall be deciduous.
4. Any tree from the "Prohibited Tree List" shall not be planted within City limits. See Chapter 6 for the "Prohibited Tree List."
5. Any plant selection designated as a noxious weed by the Utah Department of Agriculture is prohibited within City Limits.

Shrubs, grasses, and perennials shall be selected based on their compatibility with the USDA hardiness zone specifically appropriate for Herriman City. These plants must be capable of growing and thriving in the minimum temperatures of this zone. Also consider the effects of local soils and water (culinary or secondary) on the proposed plant's health.

Plant selections shall conform as appropriate to the Water Efficiency Standards as provided in Appendix G.

4.16.04 **Stamped Concrete**

All stamped concrete shall be in accordance with Herriman City ordinance § 10-23-7E. All stamped concrete must be sealed with concrete sealer.

4.16.05 **Trails**

Trail design shall comply with AASHTO "Guide for the Development of Bicycle Facilities", 1999 or newer edition. Trails shall comply with the following standards: (See *Standard Plan No. LP-04*)

1. Trail classifications include Paved, Unpaved, Primitive and other designations outline in the most recent adopted version of the Herriman City Parks Master Plan. See *Standard Plan No. LP-04*.
2. **Trailhead Gates.** Trail head gates shall be installed as required by the City Engineer or Parks Department. See *Standard Plan No. LP-03*.

4.17 Irrigation Plans

All irrigation systems shall conform to the Water Efficiency Standards as provided in Appendix G. Automatic underground irrigation systems shall be designed for all development areas that will be owned or maintained by Herriman City. They shall conform to the following requirements:

4.17.01 **Design Guidelines**

1. The irrigation system shall be designed to accommodate the watering of the entire site within a watering window of 8 hours per day, seven days per week. Approximately two inches of water should be able to be applied in any given 7-day period.
2. Each new irrigation point-of-connection shall have feeds from both the pressurized irrigation system and culinary water run to the same location, giving the City the option to use either source as needed. The connection must be configured in a way that a potential cross-connection between potable and non-potable water cannot occur. There must be physical air gap between the two sources such that only one or the other can be used at any given time. The use of a reduced pressure backflow prevention device on the culinary water side us mandatory.
3. Pipes shall be sized to accommodate a maximum water speed of 5 feet per second in both main and lateral lines.
4. When necessary, multiple valves should be able to function at the same time.
5. Spray heads and rotors shall be on separate circuits.

6. Irrigate planting areas with similar watering requirements on the same irrigation circuits. Water according to plant needs.

7. Use sprinkler heads that best fit the size of the area to be watered. Minimize the number of heads used to achieve full coverage. Full coverage is defined as an area being covered by at least four different sprinkler heads so that the overall water application is even and uniform.

8. Full irrigation coverage shall be achieved using head-to-head spacing, and reducing the head spacing distance by 25% of the nozzle radius being used (i.e. a 15' radius nozzle should be spaced approximately 11.25', and a 50' radius nozzle should be spaced approximately 37.5'). This provides a 25% overlap in actual coverage. Maintain this consistency in head spacing for any given area even if multiple valves are used to cover that area. In instances where only double coverage is possible (an area covered by only 2 separate heads, i.e. side-to-side spacing rather than head-to-head spacing), all double coverage heads must be placed on their own separate circuit so that watering times may be adjusted to ensure equal amounts of water can be applied to the area.

9. For appropriate rotor design, keep quarter and half heads on the same circuit, and full heads on a separate circuit.

10. All automatic irrigation valves will have one (1) shut-off/isolation gate valve per sprinkler circuit located upstream from the control valve. All products must be approved in writing prior to installation. This is done for standardization purposes and inventory control.

11. All piping under paving shall be installed in PVC sleeves. Sleeves shall be installed under all hardscape surfaces. All sleeves shall be sized according to the sleeve size table provide in Herriman City standard detail IR-07. Irrigation layout shall minimize the amount of pipe and sleeves under pavement.

12. Note that irrigation plans are typically more schematic in nature than municipal utility plans. It is trade practice to show irrigation heads in their correct location, then lateral lines. Valves and main lines are frequently not shown in their precise locations but are moved for graphic clarity on the drawings. All irrigation piping and equipment shall be installed in planting areas and not in/under paving or hard surfaced areas. A main line layout

sheet shall be provided as part of the plan set. This sheet will show the point of connection, backflow prevention device, main line, and control valves in their proper location.

13. The scale of the irrigation drawings shall be at a minimum of 1" = 30' scale. The plans should be sufficiently scaled to be read clearly on half-sized sheets (11"x17").

14. All irrigation equipment specified for a City project (in the public right-of-way, in parks and open space, or on City-owned property) shall comply with the City's list of approved irrigation equipment found in *Chapter 6*.

15. Irrigation plans shall conform to the Water Efficiency Standards found in Appendix G in this manual.

The irrigation design shall be based around the actual system water pressure found at the point of connection for the given project. The irrigation designer shall verify that pressure with the City's Water Department and the Parks Department prior to preparing the irrigation system design. Any concerns or issues regarding the available water pressure must be resolved before design begins.

4.18 Surveying/Staking

All survey and staking within a development shall be conducted according to the following requirements.

1. All surveying, both horizontal and vertical, shall be tied to two Herriman City Monumentation, using State Plane Coordinates, Utah Central Zone, NAD 83 US Survey foot.

2. Back lot corners shall be marked with a metal pipe or rod driven into the ground, and projected front lot corners shall be identified with permanent brass markers in the sidewalk or top back of the curb. The markers shall be countersunk into the concrete.

3. All lot corners must be in place prior to the issuance of certificate of substantial completion.

4. Stakes set for the construction of inlet boxes, manholes or other structure shall include a minimum of at least two stakes to adequately locate and align structure.

5. It shall be the responsibility of the lot owner to ensure that all lot corners are in place prior to the final inspection. The City is not responsible to replace survey stakes or markers.

6. New monumentation is required in all new developments and shall include all intersections, PI's and/or PC's, PT's. All monuments shall be Salt Lake County monuments, see Salt Lake County for current requirements. Refer to *part 4.05.16 Monuments* for installation of monuments in streets.

4.19 General Fencing Requirements

The following requirements are the general specifications for fencing.

4.19.01 Fences and Visual Obstructions

1. **Corner Lots.**

   The clear view triangle consists of a triangle formed at the intersection of two roadways. Each leg of the triangle is measured 60 feet back from the intersection of the edge of pavement, as shown in the figure.

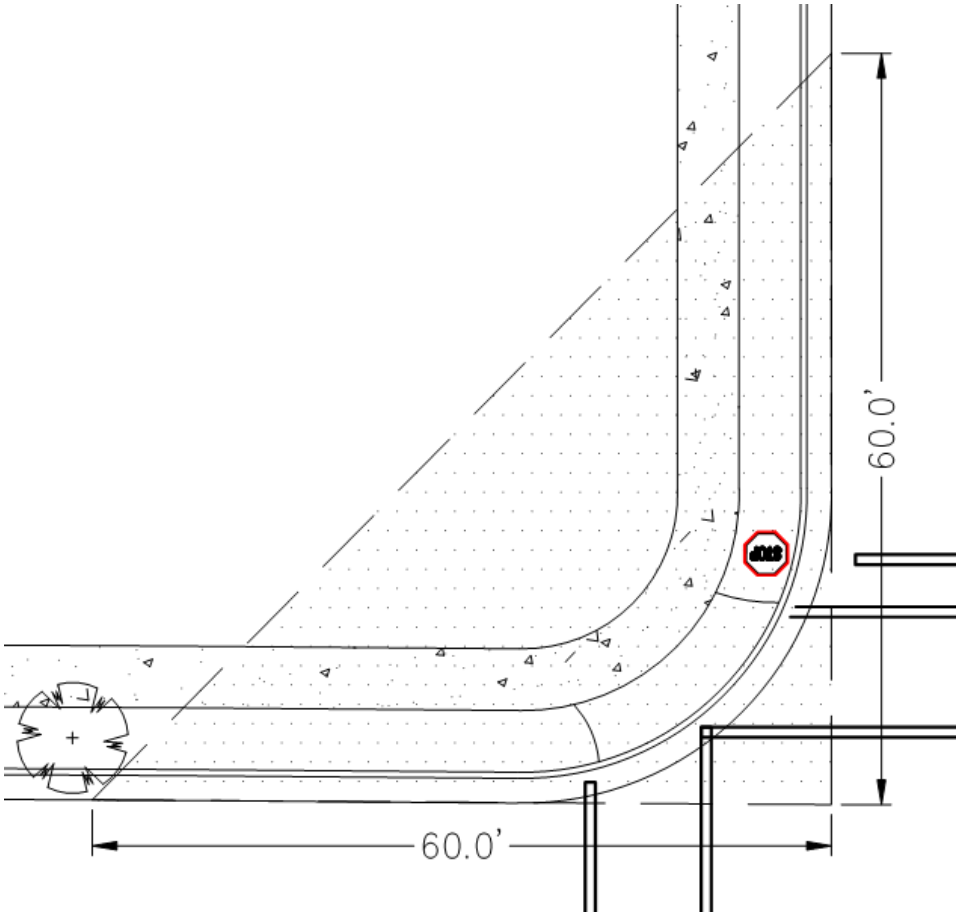

No visual obstructions above 3 feet above the top of curb are allowed in the clear view triangle.
Where all legs of an intersection contain a road right-of-way width smaller than 65 feet, the legs of the clear view triangle can be reduced to 50 feet.

2. **Driveways.** No obstruction to view in excess of three feet (3') in height shall be placed at any driveway or automobile access-way within the triangular area formed by connecting the points of intersection of the side driveway or access-way line and the property or side street line with points twelve feet (12') along the property line and twelve feet (12') along the driveway line, unless otherwise approved by the City Engineer.

4.20 Vinyl Fence Specification (Privacy and 4-rail fencing)

Following are the specifications for vinyl fence materials. Fencing shall be constructed as outlined in *Chapter 5.*

4.20.01 Materials

General requirements for materials, workmanship, and installation of rigid polyvinyl chloride (PVC) and chlorinated polyvinyl chloride (CPVC) compound privacy fencing within the municipal right-of-way are as follows:

1. Vinyl fence shall be five-foot high for split rail fences (four rail), and six-foot high for solid privacy or semi-private fences.
2. See the construction specifications Section 32 31 23
Plastic Fences and Gates for more specific details.

4.21 Noise Walls

Noise wall construction shall be required in the following situations:

4.21.01 New Highway or Highway Alteration

Any proposed project which requires construction of a new highway or the physical alteration of an existing highway that significantly changes either the horizontal or vertical alignment or increases the number of through traffic lanes (one mile or greater).

4.21.02 Federal or Federal-Aid Project

Any proposed Federal or Federal-aid project to provide noise abatement next to an existing highway.

4.21.03 New Development

New developments which are built next to an existing highway or freeway.

4.21.04 **UDOT's Noise Abatement Policy**

All noise abatement measures must meet the conditions outlined in UDOT's Noise Abatement Policy. These conditions are listed below:

1. The road must be either an Interstate or a limited access highway. A limited access highway has access restricted to designated pointed determined by UDOT (ex. Bangerter Highway or Mountain View Corridor).

2. A noise reduction of at least 5 dba must be achieved for the nearest affected property.

3. Those impacted are in favor of abatement.

4. The expected impact is 10 dba more than the noise level prior to changes in the roadway configuration, or if the predicted noise level is greater than 65 dba.

4.21.05 **Noise Wall Height Determination**

Noise walls are generally designed to provide noise reductions of 8 dba or more. However, a minimum reduction of at least 5 dba is required in order to consider the noise wall minimally effective. The goal is a 10 dba reduction in the average traffic noise levels for the majority of the first row of residence located directly behind the wall. The reasonableness criteria places a practical limitation on the height of any noise wall. The maximum allowed height is 20 feet.

4.21.06 **Plants or Trees**

Plants or trees are not allowed to be used instead of installing a noise wall. In order to be effective at blocking sound, there must be a complete blockage of the line of sight from the receiver to all noise sources and a great enough mass density to stop the transmission of sound.

4.21.07 **Noise Study**

A noise study has been completed for Mountain View Corridor and can be obtained from UDOT. Based on that noise study, developer shall determine whether the development meets the requirements to require a noise wall. This determination shall be submitted to the Herriman City Engineering Department for review and approval.

4.22 Rock Retaining Walls

Maximum height of rock retaining walls, known as rockeries, shall not exceed ten (10) feet in height, including embedment depth.

SECTION 5:
STANDARD SPECIFICATIONS

CHAPTER 5: STANDARD SPECIFICATIONS

The Herriman City Standard Specifications consist of the current edition of the Utah APWA Manual of Standard Specifications as amended and modified by the following Herriman City Amendments to the Utah APWA Manual of Standard Specifications.

In the case of discrepancies with the Herriman City Standards Specifications and the APWA Specifications resulting from changes in versions of the APWA Specifications after the 2017 edition, refer to the 2017 edition to establish the intent of the Herriman City Amendments.

Contractors constructing public improvements owned or maintained by Herriman City shall comply with the Herriman City Specifications.

CONDITIONS OF THE CONTRACT

SECTION 00 72 00
GENERAL CONDITIONS

PART 2 PRELIMINARY MATTER

2.5 BEFORE STARTING CONSTRUCTION

Add the following:

D. **Utility Contractor Qualifications**: CONTRACTOR and the utility subcontractor, if applicable, shall provide proof of experience working on similar projects of similar material and size for at least five (5) projects within the last 5 years.

PART 3 CONTRACT DOCUMENTS, INTENT, AMENDING, REUSE

3.2 RESOLVING DISCREPANCIES

C. Conflict, Error, Discrepancy, Omission in Contract Documents:
   4. Irreconcilable Conflict:

Replace subparagraphs c and d with the following:

c. The Project Specifications shall govern over Drawings, Herriman City Standard Specifications, and Herriman City Standard Drawings.
d. The Project Drawings shall govern over Herriman City Standard Drawings.

Add subparagraphs e and f as follows:

e. Herriman City Standard Specifications shall govern over Herriman City Standard Drawings, APWA Standard Specifications, and APWA Standard Plans.
f. Herriman City Standard Drawings shall govern over APWA Standard Specifications and APWA Standard Plans.

PART 6 CONTRACTOR'S RESPONSIBILTIES

6.2 LABOR, MATERIALS, AND EQUIPMENT

A. Personnel and Discipline:

Add the following:

CONTRACTOR shall train pipe installation crews on proper installation procedures for the types of pipe they install.

B. Regular Working Hours:

Add the following:

Construction activities shall be restricted to between the hours of 7:00 am and 9:00 pm Monday through Friday.

Replace section C with the following:

C. Overtime: If CONTRACTOR permits overtime work or the performance of work on Saturday, Sunday or any legal holiday CONTRACTOR shall do so at no increase to the Contract Price**.** Coordinate with Public Works Inspector before performing any construction activities occurring outside normal City business hours. If extra hours are required, a permit shall be required from the Salt Lake County Board of Health and "Off-hours Construction Permit" from the City of Herriman.

Add the following:

6.18 RESTORATION OF SURFACE IMPROVEMENTS

A. The Contractor shall be responsible for the protection, safety and restoration of any improvements existing on public or private property at the start of work or placed there during the progress of work. Existing improvements shall include but not be limited to permanent surfacing, sidewalks, curb, ditches, ramps, driveways, culverts, fences, walls and landscaping. All improvements, including landscaping, shall be restored or reconstructed to equal or better, in all respects, in a timely manner. The Contractor shall be responsible for maintaining a road surface suitable for travel by the public. Contractor shall be

responsible for safety, dust control, mud control and all claims and damages resulting from his/her failure to maintain the construction area.

DIVISION 01
GENERAL REQUIREMENTS

SECTION 01 55 26
TRAFFIC CONTROL

PART 1 GENERAL

1.3 SUBMITTALS

Modify article A as follows:

A. Traffic control plan shall be submitted to City at least 72 hours in advance of any street closure or traffic detour, except in cases of emergency.

1.4 TRAFFIC CONTROL PLAN

Add articles F and G as follows:

F. All street closures and traffic detours require advance permission from City Engineer.
G. The Police Department and Fire Department shall be notified at least 24 hours in advance of any street closure or traffic detour.

PART 3 EXECUTION

Add subpart 3.4 as follows:

3.4 SAFETY

A. All work shall be conducted in a manner resulting in the minimum amount of interference or interruption of street and pedestrian traffic.
B. Inconvenience to residents and businesses fronting on the Public Way shall be minimized.
C. Suitable, adequate and sufficient barricades and/or other structures shall be available and used where necessary to prevent accidents involving property or person.
D. From sunset to sunrise, all barricades and excavations must be clearly identified by adequate signal lights, torches, etc.

E. Barricades must remain in place until all of the permitee's equipment is removed from the site and surfaces have been restored to a safe condition usable by the public.
F. In the case that surface restoration work is to be performed by the City, the barricades together with any necessary lights, flares, or torches, must remain in place until the work is commenced by the City.

SECTION 01 57 00
TEMPORARY CONTROLS

PART 3 EXECUTION

3.2 DUST AND MUD CONTROL

Add article D as follows:

D. Dust shall be controlled during all phases of construction either by means of a water truck or other approved method.

3.5 POLLUTION CONTROL

Replace article B with the following:

B. Water: Prevent disposal of wastes, effluent, chemicals, or other such substances adjacent to or into streams, waterways, sanitary sewers, storm drains, or public waterways. Perform any emergency measures required to contain any spillage.
   1. If construction site disturbs one acre or more or is part of a larger common plan of development that disturbs one acre or more; obtain coverage under the State of Utah Construction General Permit Number UTRC00000 or the State of Utah Common Plan Permit UTRH00000, as applicable.
   2. Maintain coverage under the appropriate permit for the duration of the construction.
   3. When construction is completed and site is stabilized, remove all temporary controls and file a Notice of Termination with the State.
   4. Notify the City that the site is ready for final inspection.

DIVISION 03
CONCRETE

Add Section 03 35 33 Stamped Concrete:

SECTION 03 35 33
STAMPED CONCRETE

PART 1 GENERAL

1.1 SECTION INCLUDES

A. Materials and procedures for constructing patterned and/or colored concrete flatwork.

PART 2 PRODUCTS

2.1 COLORING

A. Colored Concrete (Patterned/Stamped Areas): Provide a two-tone coloring system on all areas to be patterned. Concrete color shall be Lava, release color shall be Walnut, as manufactured by Concrete Color and Design or approved equal. Submit color samples to the Engineer for approval.

2.2 PATTERNING/STAMPING

A. Use a random-stone pattern that matches Ashlar Slate, or another pattern approved by Engineer. Submit pattern samples to the Engineer for approval.

PART 3 EXECUTION

3.5 PLACING AND FINISHING PATTERNED/STAMPED CONCRETE

A. Place the concrete in accordance with the plan and specifications.
B. Broadcast the colored release agent over the wet concrete surface in accordance with the manufacturer's specifications.
C. Set the stamps and imprint the concrete with the pattern specified in the plans. Stamping to be done in accordance with the manufacturer's specifications.
D. Continue to spread colored release agent at the plant.

E. Cure and protect the finished surface per the manufacturer's specifications. Finish the concrete with a high gloss clear sealant.

Add the following Section 11 68 00:

DIVISION 11
EQUIPMENT

SECTION 11 68 00
PARK EQUIPMENT AND STRUCTURES

PART 1 GENERAL

1.1 SUMMARY

A. Section includes benches, tables, pavilions, gazebos, drinking fountains, restrooms, concession areas and park signs.

1.2 SUBMITTALS

A. **Submittals.** An electronic copy of all installation, maintenance booklets, and warranty information shall be provided to Herriman City prior to bond release.

PART 2 PRODUCTS

2.1 PARK EQUIPMENT

A. All parks shall be ADA accessible. The park equipment and fixtures installed within Herriman City shall be ADA accessible and comply with the requirements listed below.

1. **Benches.** All benches shall have the legs permanently anchored to a concrete pad. The finished height of the seat of the bench shall be seventeen inches (17"). The bench shall be powder coated or PVC coated metal that allows water to pass thought without pooling. Exceptions must be approved by the Parks Department.
2. **Tables.** All tables shall have the legs permanently anchored to a concrete pad. All tables shall be powder coated or PVC coated metal that does not allow the accumulation of water to affect the integrity of the table. Exceptions must be approved by the Parks Department.
3. **Pavilions.** All pavilions shall be installed on a 4″ min. thick concrete pad. Pavilion footings shall be designed to support the pavilion independently from the pad. Knock-out spaces around the pavilion supports shall be provided for maintenance access.

4. **Picnic Shelter** All parks equipped with playground equipment shall have at least one picnic shelter. All shelters shall be at a minimum 16' x 16' as manufactured by RCP Shelters, AS-16-06 or approved equal. Color shall be approved by the Parks Department. Equip shelters with two picnic tables. Table legs shall be permanently anchored to the underlying cement pad.
5. **Drinking Fountains.** Drinking fountains are required in all parks that have public parking. Attach to restroom if a building is provided. If not, provide free-standing model near the pavilion. Approved fountain is per Culinary Water Parts List or approved equal.
6. **Restrooms.** All restrooms shall be ADA accessible. Standard features shall include ceramic-covered stainless-steel toilet fixtures, partitions, sinks, soap dispensers, hand drying equipment (paper or air dryer), lighting, storage/supply room, and locking entry door.
7. **Concessions.** All concession stands, whether independent or in conjunction with a scorer's building, shall be ADA accessible.
8. **Park Signs.** All parks, tennis courts, trails, detention, or retention ponds shall have a sign with the official Herriman City logo. The information appearing on each sign shall be regulated by Herriman City. For precise details of all signage, please contact the Parks Department.

Add the following Section 11 68 13:

SECTION 11 68 13
PLAYGROUND EQUIPMENT

PART 1 GENERAL

1.1 SUMMARY

A. Section includes playground equipment and ground safety surfacing.
B. Playground equipment shall comply with all requirements of this section.
C. Standards: ASTM, ADA, CPSC. All playground equipment must comply with standards of the American Society for Testing and Materials (ASTM), the consumer Product Safety Commission (CPSC), and Americans with Disabilities Act (ADA). This must include adequate safety surfacing and transfer points or ramps to an appropriate number of elevated plan components.

PART 2 PRODUCTS

2.1 PLAYGROUND EQUIPMENT

A. **Playground Equipment.** Playground equipment may be selected from any manufacturer provided the manufacturer is compliant with all applicable US safety requirements listed above, and IPEMA Certification to ASTM F1487. Equipment shall be evaluated for design, play value, impact on the environment, inclusion, and maintenance. The most appropriate pieces for a given application may then be selected.

2.2 SAFETY SURFACES

A. All playground equipment must be installed over an acceptable impact-absorbing safety surfacing material. It is the responsibility of the playground designer, installer and operator to ensure that the size, type and depth of impact absorbing material used complies with the U.S. Consumer Product Safety Commission "Handbook for Public Playground Safety" (CPSC Handbook). This impact absorbing material must cover the entire "Use Zone" area to a depth appropriate for the height of the play equipment. The "Use Zone" is an area under and surrounding each piece of play equipment. Acceptable impact absorbing surfacing materials may include unitary safety surfacing such as pour-in-place rubber, rubber tiles, or synthetic turf. Natural

loose fill materials, such as engineered wood fiber, are also acceptable. The type of material used shall be determined for each application.

PART 3 EXECUTION

3.1 USE ZONES

A. Comply with the following:

1. **Slides.** The use zone must extend at least six (6') feet in all directions from the perimeter of the slide. Also, the use zone in front of the slide exit must extend a total of four (4') feet plus the height of the platform as measured from the point where the slide slope is reduced to 5 degrees.
2. **All other play equipment.** The use zone must extend in all directions from the perimeter of the play equipment to the distance specified by the play equipment manufacturer.

3.2 PLAYGROUND AREAS

A. All playground areas shall have a five (5') foot sidewalk around or partially around the playground with a modified (20" tall, reinforced) APWA Plan 209 Type Q curb. Sidewalk shall comply with *Section 4.07.30* and *Standard Plan No. RD-08*.

3.3 EQUIPMENT INSTALLATION

A. Equipment shall be installed by an experienced playground installer trained to install the specified play equipment proposed. If possible, the installer should be certified by the equipment manufacturer.
B. All play equipment shall be installed per manufacturer's specifications.
C All playground equipment shall receive a third party inspection report by a Certified Playground Safety Inspector (CPSI). All items requiring attention shall be addressed and certified by CPSI prior to completion and bond release, if applicable.

DIVISION 26
ELECTRICAL

SECTION 26 56 19
ROADWAY LIGHTING

PART 1 GENERAL

Add the following articles 1.5:

1.5 STREETLIGHTING CONSTRUCTION

A. The Contractor shall furnish and install all infrastructure required to construct the streetlight system and all other infrastructure needed to power the street lighting system as shown on the plans. Trenching shall be to the depth, width and standards specified by Herriman City.

PART 2 PRODUCTS

2.1 CONDUCTORS

A. Materials

Add the following paragraphs 4 - 7:

4. Underground wire for all residential streetlights shall be minimum 8-gauge TC copper wire direct bury cable or THHN-THWN, i.e., wet conditions wire, placed in conduit and buried.
5. Wire in the light poles for all streetlights shall be minimum 12-gauge and type of wire shall be THHN-THWN, i.e., wet condition.
6. Underground wire for arterial streetlights shall be a minimum 6-gauge TC copper wire
7. Underground wire shall be placed in conduit and buried a minimum of 24" deep.

B. Splicing

Add the following paragraph 1:

1. See *Standard Drawing SL-08A* for additional details.

C. Conduit

Add the following paragraph 2:

2. Conduit for underground wire used for residential and arterial streetlights shall be Schedule 40 PVC conduit. The conduit size depends on the heat rating and shall be determined by the electrical code, with a minimum size of 2″.

2.2 JUNCTION BOXES

Add the following article C:

C. Materials

1. All cable shall be installed from pole to a Carson L 1419-12 Green St Lgtg HBlt light duty box located within ten (10) feet of nearest power source. Box shall be green in color; lid shall say STREET LIGHT.

DIVISION 31
EARTH WORK

SECTION 31 05 13
COMMON FILL

PART 2 PRODUCTS

2.5 NATIVE

Add article B as follows:

B. When native material is used for fill a maximum particle size shall not exceed 6″ in the longest direction. Contractor shall dispose of larger native material at a site secured by the Contractor offsite from work zone at no additional cost to the OWNER. Native material meeting the above specification of maximum particle size shall not be removed from the work zone until ENGINEER has made a written determination that said material will not be reused in any application within the scope of the project.

2.8 GRAVEL

A. Material: Rock, stone, or other high-quality mineral particle or combination.

Add the following to article A:

Gravel Surface.

Crushed stone or gravel meeting the following sieve ranges.

US Sieve Size	Sieve Gradation Ranges
1½″	100%
1″	75%
¾″	15%
½″	10%

DIVISION 32
EXTERIOR IMPROVEMENTS

SECTION 32 01 05
INFORMATION, REGULATORY, AND WARNING SIGNS

PART 1 GENERAL

1.2 REFERENCES

A. **ASTM Standards**

Add the following to article A:

ASTM 4956: Standard Specification for Retro-reflective Sheeting for Traffic Control.

Add the following subpart 1.5:

1.5 CONTRACTOR/DEVELOPER RESPONSIBILITY

A. Street signs placed within Herriman shall be installed according to *Standard Plan No.'s RD-05 and RD-06.*

B. The Contractor shall install all information signs and traffic control devices required for the development. The Developer shall pay all installation, material, equipment, and labor costs associated with installation of the signs and traffic control devices.

PART 2 PRODUCTS

2.1 MATERIALS

A. Sign Blank:

Revise paragraph 3 to read as follows:

3. Soft Plywood Sign Blank: PS 1 Group 1 with each panel bearing initials DFPA Grade – Trademark of the American Plywood Association; painted

with weather resistant paint to ENGINEER choice of color unless indicated otherwise. Plywood sign blanks will be allowed at discretion of ENGINEER on limited and case by case basis, usually for the purpose of temporary or specialty signage.

Replace article B with the following:

B. Sign Posts: 2.375-in outside diameter 16 GA galvanized (per Section 32 01 05) steel posts with the properties listed below. Posts of other cross-sectional dimensions and material properties may be permitted upon ENGINEER approval.
   1. Sign posts shall be approved by FHWA and AASHTO under the current NCHRP Report 350 requirements.
   2. Post material shall conform to ASTM-A653, G90 and HSLAS Type B.
   3. Post material yield strength; 55,000 psi minimum.
   4. Post material ultimate tensile strength; 70,000 psi minimum.
   5. Sign posts shall be powder coated (satin black) over galvanization to minimum dry thickness of 3.0-mm.
   6. Sign posts shall be capped with a powder coated (satin black) post cap, either decorative or standard, per OWNER directive.

Replace article D with the following:

D. Retro-reflective Sheeting: Engineering Grade (ASTM Level 1, Enclosed Lens), High Intensity Grade (ASTM Level 3, Encapsulated Lens) and Diamond Grade (ASTM Level 4, Prismatic Lens) retro-reflective sheeting conforming to the specifications set forth in ASTM D4956 and the following conditions.
   1. The manufacturer shall warranty Engineering Grade retro-reflective sheeting for a period of seven years from the date of construction.
   2. The manufacturer shall warranty High Intensity Grade and Diamond Grade retro-reflective sheeting for a period of ten years from the date of sign construction.
   3. The retro-reflective sheeting will be considered unsatisfactory if it has deteriorated due to natural causes to the extent that:
      a. The sign is ineffective for its intended purpose when viewed from a moving vehicle under normal day and night driving conditions by a driver with normal vision, or
      b. The coefficient of reflectivity is less than 80% of the initial specified coefficient of reflectivity after 70% of the warranty life and the

coefficient of reflectivity is less than 70% of the initial coefficient of reflectivity after 100% of the warranty life.

Add article H through J as follows:

H. Post Anchor: V-Loc model 23VR2 with stabilizer barb or approved equivalent including installation wedge with the following conditions.
   a. Install anchor and wedge per manufacturer recommendations.
   b. Anchor shall be NCHRP Report 350 approved.

I. Sign Messaging and Diagram Elements: Sign messaging and diagram elements applied to the surface of the retro-reflective sheeting in the form of inks and other sheeting materials. Inks and other materials shall be designed for use on traffic signs and be recommended by the sheeting manufacturer and shall be warranted to be effective for a period of time commensurate with the warranted life of the retro-reflective sheeting.

J. Warranty: All sign suppliers are required to warranty permanent street signs they supply for a period of ten (10) years after the time of installation against workmanship, and material failures. Contractor is required to provide the following:
   1. Affix to each sign a one inch high, two-digit number representing the manufacture year, to the front bottom left corner of each sign. Numerals are to contrast with the color of the sheeting. For example, 2011 shall be represented as "11" and so forth.
   2. Affix to each sign and device a two inch by two-inch impermeable, non-fading, weather resistant, self-adhesive label. Attach label where it will not obscure sheeting. The label shall contain the month and year of manufacturer, sheeting manufacturer, sheeting type, and supplier's name.

2.2 COLORS AND FORMAT

Add articles C and D as follows:

C. ASTM Level 4 retro-reflective sheeting is required on all yield and stop signs. ASTM Level 3 retro-reflective sheeting is required for all warning signs, no passing zones, signal ahead signs and other signs, per ENGINEER directive. ASTM Level 1 retro-reflective sheeting generally approved for other signs, per ENGINEER approval.

D. ASTM Level 4 yellow-green retro-reflective sheeting is required for all school zone and pedestrian zone signs.

PART 3 EXECUTION

3.2 INSTALLATION

Add article E as follows:

E. Sign blades shall be attached to the signpost with tamper resistant fasteners.

SECTION 32 01 06
STREET NAME SIGNS

PART 1 GENERAL

1.2 REFERENCES

A. **ASTM Standards**

Add the following to article A:

ASTM 4956: Standard Specification for Retro-reflective Sheeting for Traffic Control.

Add the following subpart 1.3:

1.3 CONTRACTOR/DEVELOPER RESPONSIBILITY

A. Street signs placed within Herriman shall be installed according to *Standard Plan No.'s RD-05 and RD-06.*
B. The Contractor shall install all information signs and traffic control devices required for the development. The Developer shall pay all installation, material, equipment, and labor costs associated with installation of the signs and traffic control devices.

PART 2 PRODUCTS

2.1 MATERIALS

A. Blanks:

Replace paragraphs 1 and 2 with the following:

1. Sheet Aluminum: 0.080-in thick ASTM B 209 alloy 6061-T6 double bladed signs riveted at both ends with stainless steel rivets and back washers; sign dimensions shall be 38.0-in length by 9.0-in height.
2. Nonmetallic: No nonmetallic sign blanks are allowed.

Replace article B with the following:

B. Retro-reflective Sheeting: Diamond Grade (ASTM Level 4, Prismatic Lens) retro-reflective sheeting conforming to the specifications set forth in ASTM D4956 and the following conditions.
   1. The manufacturer shall warranty Diamond Grade retro-reflective sheeting for a period of ten years from the date of sign construction.
   2. The retro-reflective sheeting will be considered unsatisfactory if it has deteriorated due to natural causes to the extent that:
      a. The sign is ineffective for its intended purpose when viewed from a moving vehicle under normal day and night driving conditions by a driver with normal vision, or
      b. The coefficient of reflectivity is less than 80% of the initial specified coefficient of reflectivity after 70% of the warranty life and the coefficient of reflectivity is less than 70% of the initial coefficient of reflectivity after 100% of the warranty life.

Replace article C with the following:

C. Sign Lettering: White upper-case and lower-case letters, electronically cut film reverse weeded on retro-reflective sheeting.

Replace article D with the following:

D. Letter Composition: Spell out street name and give numerical coordinate below or vice versa, case dependent. Upper row lettering shall be 4.5-in height; lower row lettering shall be 2.25-in height. All lettering upper- and lower-case Helvetica font. Include City logo on right hand side.

Replace article F with the following:

F. Sign Posts: 2.375-in outside diameter 16 GA galvanized (per Section 32 01 05) steel posts with the following properties.
   1. Sign posts shall be approved by FHWA and AASHTO under the current NCHRP Report 350 requirements.
   2. Post material shall conform to ASTM-A653, G90 and HSLAS Type B.
   3. Post material yield strength; 55,000 psi minimum.
   4. Post material ultimate tensile strength; 70,000 psi minimum.

5. Sign posts shall be powder coated (satin black) over galvanization to minimum dry thickness of 3.0-mm.
6. Sign posts shall be capped with a powder coated (satin black) post cap, either decorative or standard, based upon OWNER directive.

Add articles I through L as follows:

I. Post Anchor: V-Loc model 23VR2 with stabilizer barb or approved equivalent including installation wedge with the following conditions.
   1. Install anchor and wedge per manufacturer recommendations.
   2. Anchor shall be NCHRP Report 350 approved.

J. Sign Messaging and Diagram Elements: Sign messaging and diagram elements applied to the surface of the retro-reflective sheeting in the form of inks and other sheeting materials. Inks and other materials shall be designed for use on traffic signs and be recommended by the sheeting manufacturer and shall be warranted to be effective for a period of time commensurate with the warranted life of the retro-reflective sheeting.

K. Warranty: All sign suppliers are required to warranty permanent street signs they supply for a period of ten (10) years after the time of installation against workmanship, and material failures. Contractor is required to provide the following:
   1. Affix to each sign a one inch high, two-digit number representing the manufacture year, to the front bottom left corner of each sign. Numerals are to contrast with the color of the sheeting. For example, 2011 shall be represented as “11” and so forth.
   2. Affix to each sign and device a two inch by two-inch impermeable, non-fading, weather resistant, self-adhesive label. Attach label where it will not obscure sheeting. The label shall contain the month and year of manufacturer, sheeting manufacturer, sheeting type, and supplier’s name.

L. Film Color: Shall be green for public roads, and blue for private roads. Film color for the city logo portion of the sign shall be white.

PART 3 EXECUTION

3.2 INSTALLATION

Replace article A with the following:

A. Install sign post in anchor per manufacturer recommendation.

Add articles E, F and G as follows:

E. Collector Streets: All sign posts installed on collector streets shall be capped with a decorative post cap, powder coated (satin black). All sign posts installed on collector streets shall have a decorative slip base, 31.0-in height, powder coated (satin black), per City specifications.
F. Install signs on the north-west and south-east corners of the intersection.
G. Sign blades shall be attached to the sign post with tamper resistant fasteners.

SECTION 32 01 13.61
SLURRY SEAL

PART 1 GENERAL

1.4 QUALITY ASSURANCE

Add article F as follows:

F. Submit Emulsion Supplier Bills of Lading and Quality Control test results for the emulsion production batches used on the project.

PART 2 PRODUCTS

Replace subpart 2.4 with the following:

2.4 MIX DESIGN

A. Asphalt Emulsion: CQS-1h, ASTM D 2397
B. Gradation: Meet SS Type II (Table 3) with Target Grading Curve. Field Samples shall not vary from the Target Grading Curve by more than the Target Tolerance.
C. Use a Utah Department of Transportation approved laboratory. Establish a job mix design conforming to the ISSA A105 tests listed in Table 4.
   1. Use the same materials and aggregate gradation to be used on the project.
   2. Set and Cure Time: Select to meet opening to traffic requirements.

TABLE 4 – SLURRY SEAL MIX DESIGN REQUIREMENTS

ISSA TEST NO.	DESCRIPTION	SPECIFICATION
ISSA TB 106	Slurry Seal Consistency	2cm Minimum 3cm Maximum
ISSA TB-139 For quick-traffic systems	Wet Cohesion 30 Minutes Minimum (Set) Wet Cohesion 60 Minutes Minimum	12 kg-cm Minimum 20 kg-cm Minimum
ISSA TB 109 For heavy-traffic areas only	Excess Asphalt by LWT Sand Abrasion	50 g/ft^2 Maximum (538 g/m^2 Maximum)
ISSA TB-114	Wet Stripping	Pass (90% Minimum)

TABLE 4 – SLURRY SEAL MIX DESIGN REQUIREMENTS

ISSA TEST NO.	DESCRIPTION	SPECIFICATION
ISSA TB-100	Wet-Track Abrasion Loss, One-hour Soak	75 g/ft^2 (807 g/m^2)
ISSA TB-113	Mix Time**	Controllable to 180 Seconds Minimum

PART 3 EXECUTION

3.2 PREPARATION

D. Traffic Control:

Replace paragraph 2 with the following:

2. Install reflective tabs to mark existing locations in accordance with Section 01 55 26. Costs are included in the work of this section.

3.4 APPLICATION

A. General:

Replace paragraph 1 with the following:

1. Machine meter settings must match mix design. Water and additives may be adjusted (per mix design) for better consistency or set time. Emulsion content may be reduced, with permission of Owner/Engineer, to address bleeding edges.

3.5 TOLERANCES

Add article B as follows:

B. Target application rates are center of the stated range. Placements shown to be outside of stated range will require correction at the Contractor's expense.

3.6 FIELD QUALITY CONTROL

Replace article C with the following:

C. Perform daily quality control of slurry application based on weight of product and area covered.
   1. Maintain quality control documentation and submit summary to the Owner/Engineer upon completion of daily work. ***Do not begin next day's production until quality control data has been submitted to the Owner/Engineer.***
   2. Calculate and record the percent asphalt content of the mixture from the equipment computer display readings at the end of each day.
   3. Calculate and record the yield of the aggregate being placed from the equipment computer display readings at the end of each day.
   4. Maintain a daily report and log sheet containing the following information:
      a. Aggregate used, ton (dry)
      b. Slurry emulsion used, ton (as delivered)
      c. Bituminous materials for tack coat used, if specified, ton
      d. Water used in mixture, gallons
      e. Additive used in mixture, gallons
      f. Surface area completed (square yards)
      g. Surface area application rate (lbs per square yard)
      h. Percentage of emulsified asphalt (without water) based on dry aggregate

3.7 AFTER APPLICATION

Replace article E with the following:

E. Reestablish all original pavement markings unless otherwise directed. Do not apply permanent markings or stripe material until final application of seal coat has been in-place at least 7 days, or as permitted by the Owner/Engineer. Layout must be verified by the OWNER/ENGINEER prior to application. Costs are included in the work of this section.

SECTION 32 01 13.64
CHIP SEAL

PART 1 GENERAL

1.4 QUALITY ASSURANCE

Add the following as article E:

E. Submit Emulsion Supplier Bills of Lading and Quality Control test results for the emulsion production batches used on the project.

PART 2 PRODUCTS

2.1 BINDER

Replace article B with the following:

B. Emulsified Chip Asphalt: CRS-2P, LMCRS-2 of HFMS-2 in accordance with UDOT Section 02745.

Add the following article C:

C. Fog Seal: CSS-1h in accordance with AWPA 32 01 13.50

Replace subpart 2.3 with the following:

2.3 MIX DESIGN

A. Gradation: Use Grade A gradation, unless otherwise directed.
B. Determine emulsion initial application rate based upon achieving aggregate embedment of 50 to 70 percent embedment of largest percentage aggregate size after rolling.
    1. Mix design application rate is for initial starting point. Determine actual daily application rate based on field evaluation of test strip for each day's placement.
    2. Field evaluation of test strip is based on removal and verification of embedment of a minimum of 10 maximum aggregate particles after rolling is complete.

PART 3 EXECUTION

3.2 PREPARATION

D. Traffic Control:

Replace paragraph 2 with the following:

2. Install reflective tabs to mark existing locations in accordance with Section 01 55 26M. Costs are included in the work of this section.

Add the following paragraph 3:

3. Establish and maintain temporary traffic speed limit of 15 mph until sweeping operations are complete. Include "LOOSE GRAVEL", "REDUCED SPEED AHEAD" and "SPEED LIMIT 15 MPH" signs prior to and at the start of each chip seal section. Include additional "LOOSE GRAVEL" and "SPEED LIMIT 15 MPH" signs after each arterial intersection. Submit Traffic Control plan to the Engineer for approval prior to beginning work. Costs included with work performed in this section.

3.4 APPLICATION

Replace article B with the following:

B. Asphalt Emulsion:
   1. Apply asphalt material at a rate sufficient to obtain required chip embedment after rolling operation.
   2. Maintain viscosity sufficient to minimize runoff. Recommended target is between 100 and 150 centistokes as per ASTM D2170.
   3. Adjust application rates throughout the project depending on existing conditions.
      a. Determine actual daily application rate based on field pull-out of a minimum of 10 maximum aggregate chips within the first 100 feet of placement, after rolling. Provide basis for daily adjustment to the ENGINEER.
   4. Make straight lines along lip of gutter and shoulders, end of streets and in street intersections. No runoff onto these areas will be permitted.
   5. Leave no holes, bare spots, or cracks.
   6. Vary edge lines no more than one (1) inch per 100 feet.

7. Protect curb, gutter, and sidewalk from spatter, mar, or overcoat.

Replace subpart 3.5 with the following:

3.5 ROLLING

A. Use at least two pneumatic-tire rollers in a longitudinal direction to roll surface after the cover material has been spread.
B. Roll at least four passes to seat the cover material.
   1. A pass is defined as traveling in one direction only.
C. Control bleeding with blotter material and as determined by the Engineer.
D. Set the roller speed to prevent bouncing or skidding.
   1. Do not exceed 10 mph.
   2. Reduce roller speeds during directional changes to prevent surface tearing.
E. Synchronize the speed of the distributor and chip spreader with that of the rolling operation.
   1. Begin initial rolling, consisting of one complete coverage, immediately behind the chip spreader.
   2. Begin secondary rolling, consisting of second and third coverage, immediately after completing initial rolling.
   3. Synchronize all operations to keep rolling operations within 2,500 feet of the ongoing chip seal application.
F. Complete rolling before the bituminous material cools or hardens.
G. Sweep excess cover material off the roadway after the emulsion has set and prior to allowing traffic on chips.
H. Keep traffic off at least four (4) hours or chips are deemed stable.
   1. If MOT requires allowing traffic prior to four (4) hour limit, provide signage and pilot vehicle as necessary limiting speed to 15 mph until four (4) hour period expires. Costs included with work performed in this section.

3.6 FOG SEAL

Replace article A with the following:

A. Apply Fog Seal as per Section 32 01 13.50. Use 0.15 gal/SY application rate.

3.8 FIELD QUALITY CONTROL

Replace article B with the following:

B. Perform daily quality control of chip seal application based on weight of product and area covered.
   1. Maintain quality control documentation and submit summary to the Engineer upon completion of daily work. **Do not begin next day's production until quality control data has been submitted to the Engineer.**
   2. Calculate and record the emulsion quantity used from the equipment computer display readings at the end of each day.
   3. Calculate and record the yield of the aggregate being placed from the equipment computer display readings at the end of each day.
   4. Maintain a daily report and log sheet containing the following information:
      a. Aggregate used, ton (dry)
      b. Chip seal emulsion used, ton (as delivered)
      c. Fog coat emulsion used, ton (as delivered)
      d. Water used in mixture, gallons (calculation from BOL)
      e. Surface area completed (square yards)
      f. Surface area application rate (lbs per square yard)

3.9 AFTER APPLICATION

Replace article C with the following:

C. Reestablish all original pavement markings unless otherwise directed. Do not apply permanent markings or striping material until final application of fog coat has been in-place at least 7 days, or as permitted by the engineer. Layout must be verified by the ENGINEER prior to application. Costs are included in the work of this section.

SECTION 32 01 18
TEST HOLE REPAIR

PART 1 GENERAL

1.01 SECTION INCLUDES

A. This specification covers the requirements for test hole coring, vacuum excavation, backfilling, and reinstatement of the test hole core in asphalt or concrete pavements to allow for underground utility repairs and underground exploratory potholing. Test hole coring shall be defined as follows: The operation of coring a circular hole through the roadway pavement using diamond tipped core drilling equipment.

1.02 POTHOLE EXCAVATION

A. The vertical alignment of the test hole coring shall be perpendicular to the horizon, and the cutting shall extend to the full depth of the existing pavement.

B. Unless otherwise approved by the City Engineer, test hole cores shall be no less than 6 inches and no greater than 18 inches in diameter. Adjacent cores shall not be closer than 3 feet from each other (edge to edge), shall not contain a joint or any pavement cracks greater than 1/8 inch wide, and shall not be performed in pavement where the section is less than 3 inches thick. Coring shall be performed with a test hole coring saw with high strength steel diamond tipped core drill bits.

C. Soils within potholes shall be removed by air/vacuum extraction methods to expose utilities. The zone of soil removal shall remain essentially within a vertical place extending below the edges of the removed pavement. The Contractor shall remove all excess materials excavated from the site.

PART 2 PRODUCTS

2.1 BONDING AGENT

A. The bonding agent is material required to bond asphalt pavement cores to the asphalt concrete pavement from which it was originally removed. Bonding material shall be a single component cementitious, rapid hardening, high strength, waterproof bonding agent conforming to the physical properties shown in Table 1 below, and Section 3.1 C.

TABLE 1 – BONDING MATERIAL PROPERTIES

Property	ASTM Test Method	Requirements
Bond Strength (Slant Shear), psi (70° F, 30 minute cure)	C882	200 minimum
Strength, psi (70° F, 60 minute cure)	C109	1500 minimum

1. Bonding material shall be impervious to water penetration at the joint after curing.
2. Bonding material shall, within 30 minutes at minimum ambient temperature of 70 degrees F, allow an 18" diameter core to support a traffic load equivalent to at least three (3) times the AASHTO H-25 standard wheel load.
3. The bonding material is required to securely bond the asphalt concrete core to asphalt concrete pavement and to fill all voids between the core and pavement and within the core.
4. Specifications and test results for the bonding material shall be submitted to the City for review and approval before use.

PART 3 EXECUTION

3.1 PAVEMENT RESTORATION

A. Pothole Backfill: The contractor shall place 1 ft of compacted bedding sand over utility. The remainder of the hole shall be filled with flowable fill in accordance with Section 31 05 15 Cement Treated Fill, to the bottom of the pavement surface.

B. The surface cut by test hole coring restored to its original condition with the reinstated core flush with and in the original orientation as the existing surface, matching existing pavement surface appearance.

C. A bonding agent shall be a single component cementitious, rapid hardening, high strength, water proofed application such as Utilibond, manufactured by Utilicor Technologies, Inc. or an approved equal shall be used for pavement core reinstatement. Excess bonding material shall be removed from the restored surface. A patched appearance shall be avoided in surface restoration wherever possible.

D. Unless otherwise approved by the City Engineer, the Contractor shall reinstate the bonded test hole core within 24 hours of cutting the pavement. Openings allowed to be left open greater than 24 hours shall be covered with an approved steel road plate capable of supporting traffic loads.

3.2 SURFACE TOLERANCES

A. The reinstated core shall be flush and level with the adjacent pavement. Gaps attributable to the positioning of the core shall be less than 1/16 inch between the bottom of a minimum 3 foot long straightedged and the surface of the pavement in any direction on the surface of the test hole core, except across the pavement crown or drainage gutters.:

B. Deficiencies:

1. Where the pavement core is found to be fractured or defective upon removal, or becomes damaged after removal and prior to reinstating, the defective or damaged core shall not be used to reinstate the pavement. Pavement repair shall be performed in accordance with Connection to Existing Asphalt Edge, found in Herriman City Standard Drawing RD-09.

2. A pavement core is considered unacceptable when one of the following conditions exist:

   a. The core contains any vertical cracks wider than 1/8 inch extending full depth or partial depth through the core; or
   b. Any deteriorated piece of the core is larger than 10 percent of the overall area of the core.

c. Two or more successive layers of asphalt concrete in the core becoming horizontally delaminated and cannot be rebounded to each other with the bonding compound.

3. All unacceptable pavement cores shall be removed from the job site.

4. If another equivalent core of sound condition and matching existing pavement of the same diameter, depth and composition as the defective core is available, it may be reinstated in substitution of the defective core.

END OF SECTION

SECTION 32 11 23
AGGREGATE BASE COURSE

PART 1 GENERAL

1.6 QUALITY ASSURANCE

Add the following as article E:

E. **Field Density at Manholes: Lot size is (1) day placement.** Field density test shall be provided at 1 for every 5 storm drain manholes, sewer manholes, catch basins, cleanouts, combination inlet boxes, and water and secondary water valve boxes. Failed tests may warrant additional testing at the discretion of the City Engineer or designee

SECTION 32 12 05
BITUMINOUS CONCRETE

PART 1 GENERAL

1.1 SECTION INCLUDES

Add the following articles B and C:

B. Scope and details for bituminous concrete mix design.
C. Additional requirements for Quality Control related to bituminous concrete production and placement.

1.4 SUBMITTALS

A. **General**

Add the following paragraph 4:

4. The mix design shall be submitted and approved by the Herriman Engineering Department prior to installation

B. **Quality Assurance**

Add the following paragraphs 4 and 5:

4. Testing Report: Submit Quality Control data to the Engineer within 1 working day after completion of each day of paving and prior to the start of the next paving day.
5. Plant Production Report: Submit daily plant production records to the Engineer within 1 working day after completion of each day of paving and prior to the start of the next paving day.

1.5 QUALITY ASSURANCE

Add the following articles B and C:

B. HMA Mixing Plant: Use a UDOT 514 QMP certified Asphalt Mix Plant.
   1. Submit plant certification documentation with mix design.

2. Submit daily plant production records within 1 working day after completion of each day of paving and prior to the start of the next paving day.

C. Perform Quality Control efforts sufficient to demonstrate material produced meets requirements of this specification.
   1. Submit Quality Control data to the Engineer within 1 working day after completion of each day of paving and prior to the start of the next paving day.

PART 2 PRODUCTS

Replace subpart 2.3 with the following:

2.3 ADDITIVES

A. Mineral Filler: Not Required
B. Recycle Agent: Not Required
C. Anti-strip Agent: Hydrated Lime or Liquid Anti-Strip
   5. Must meet HWT Requirements for Superpave Mixes
D. RAP or ROSP: 30%, Max
   1. Must be free of detrimental quantities of deleterious materials.
   2. Up to 15 percent max weight of RAP or binder replacement, whichever is lesser, determined by chemical extraction. For RAP > 15% follow APWA section 32 12 05 2.1
E. Other:
   1. Fiber – Not Required
   2. Warm Mix Asphalt (Evotherm) – At Supplier's Discretion

Add the following subpart 2.6:

2.6 BITUMINOUS CONCRETE MIX DESIGN CRITERIA

A. Road Category: I, II, or III
B. Mix Compaction: 75 Gyration
C. Binder Grade: PG 64-34 (Arterials, Major Collectors) or PG 58-28 (Residential/Minor Collectors, Trails)
D. Master Grading Band: SP-1/2"

SECTION 32 12 16.13
PLANT MIX BITUMINOUS PAVING

PART 1 GENERAL

1.4 SUBMITTALS

Add the following article D:

D. **14 Days Before Paving:**
   1. Provide the city a quality control plan prior to any paving operation in the City (see section 1.10 B for requirements).
   2. For placement during cold weather (< 70 degrees F ambient or existing surface), provide a cold weather paving plan (see section 1.12 for requirements).

Add the following subparts 1.10, 1.11, 1.12:

1.10 QUALITY CONTROL

A. Quality Control Plan minimum requirements:
   1. Procedures to verify and demonstrate target density anywhere on the pavement according to standards.
   2. Procedures to develop and maintain rolling patterns.
   3. Define Quality Control sampling and testing procedures, sample location and frequency determination procedures, equipment to be used.
   4. See Section 3.6 for minimum QC Effort requirements.

B. Quality Control minimum requirement:
   1. Use only accredited and/or certified testing devices to verify densities and other pavement qualities.
   2. Meet details identified in Section 3.6.
   3. Verify density by using either cores or density gauge testing with gauges that are correlated to cores or with significant off-set to provide the best possibility of meeting density requirements.
   4. Provide asphalt mix design testing by the asphalt plant QC agency and a copy of the daily plant printout by a UDOT certified HMA plant. This may require informing production facilities ahead of time that the information will be needed as they currently are only required to document UDOT mixes and may not be planning on documenting city mixes.

1.11 PRE-PAVING MEETING

A. Request a pre-paving meeting at least a week prior to paving.

1.12 COLD WEATHER PLAN REQUIREMENTS

B. Provide plans for dealing with quick arrival of inclement weather or precipitation and the plans for dealing with mix that has been delivered but not yet placed. Compaction and bonding issues are of primary concern. Remove and replace becomes the primary response for the City when specification requirements are not met.

C. Cold weather plan components should include, but not be limited to:
   1. Tarping of haul vehicles
   2. Use of additional rollers
   3. Modified roller patterns, including more aggressive breakdown efforts
   4. Use of thicker lifts
   5. Use of warm-mix technology to extend compaction window

D. Do not use increased mix temperatures as cold weather solution.

E. For days when temperature below 50 degrees F, do not use lifts thinner than 2.5 inches; for lifts that are 3.5 inches or greater verify that the top and bottom of the lift are equally compacted (± 1.0%). This requires that at least one core be taken from the roadway and then cut in half horizontally so that the top half and bottom half can both be tested for density.

PART 3 EXECUTION

3.2 PREPARATION

Add the following article D:

D. Limitations:
   1. No paving on unaccepted base
   2. No paving without submitting base compaction results
   3. No paving over saturated base
   4. No paving over ground temperature of 45 degrees F or less
   5. No paving without an approved mix design (in writing)
   6. No paving without an approved written quality control plan

7. No paving during inclement weather or when inclement weather is threatening or imminent
8. No paving when there is predicted a 50% or more chance of any kind of precipitation
9. No paving when disapproved by engineer.

Add the following subpart 3:11:

3.11 MINIMUM FIELD QUALITY CONTROL PRACTICES

A. Field quality control may either be performed by the contractor or by an independent firm. The duties should be the same for either entity for asphalt field quality control. Note: the contractor may have better access to information from the plant and typically has their gauges calibrated to the mix. The information in italics below is good practice, but not necessarily required.
   1. *Note the compaction equipment the contractor intends to use.*
   2. For day 1 paving, obtain the Rice value that will be used either from the plant or the contractor. *Note who is providing the Rice value on daily report.*
   3. For projects with multiple days of paving, base Rice values for paving days after day 1 on Rice values obtained from day 1 paving.
   4. *Have gauge prepared for density testing at the time paving is begun. (Thin lift gauges are preferable to standard density gauges however they are not required. If there is no calibration data available to set an offset, the default offset should be set at a minimum of – 2 lbs, i.e. the gauge should be set to read a minimum of two pound lower than actual. Densities should be performed with depths set ½" to 1" less than the lift thickness if the gauge has a thickness setting. 30 second tests are usually adequate for QC readings however longer tests provide more accurate information.)*
   5. Check the temperature of the mix behind the paver periodically. *(Variation in mix temperatures are common and changes in temperature will affect the amount of compaction effort required. If the temperature changes more than 10 to 20 degrees, the roller operators and/ or the foreman should be notified so that adjustments can be made. It is a good idea to record a few of the temperature readings through the day.)*
   6. Perform density tests on the first rolling to set the rolling pattern. *Often the roller operators have a good understanding of what they need to do. The QC*

person informs them of the densities they are achieving so that adjustments can be made. The QC technician should record values in different locations throughout the length and width of the mat so that the entire rolling operation is verified. Common errors include having the roller ride on the curb on too many passes without rolling inside the curb, leaving an area of low density from the curb to the center of the roller width; not having the roller ride 6"-12" over unbound edges resulting in low density at the edge; and the QC technician performing their tests in the center of the pass where the rollers overlap recording a misleading high number not representative of the surrounding area.

7. Perform routine density tests to verify that the contractor's efforts continue to achieve the desired density. *If the densities are not consistent the technician should discuss the results and the contractor's practices with the foreman. Note any changes in the conditions and the rolling operation. Changes that will affect the mat density include the distance the rollers are behind the paver, speed of the rollers, ambient and mat temperature changes and timing of the delivery trucks. The QC technician provides information for the foreman to act upon.*
8. Record densities scattered across the width and length of the paving. Densities taken as the final record should be taken after the final roller is finished and the mat has cooled reasonably- below 200 degrees. *The technician should record a density every 100- 200' along the length of the paving pass and the readings should be scattered across the width of the mat, not just along the sweet spot down the center of the pass. Densities are not typically performed within 1' of the edges of the paving or in the immediate vicinity of manholes and other obstructions.*
9. Take samples from behind the paver using a plate and in accordance with City requirements for sampling.
    a. Sampling from the paver hopper or wings is not acceptable.
    b. With permission from the City, samples may be taken from the windrow provided that proper windrow sampling and reduction procedures are followed. Windrow samples will also require a visual evaluation of the mix behind the paver to identify segregation. If segregation is visible, windrow samples will be discontinued.

10. Perform coring as required by the quality control plan. Core locations must be chosen in a random manner that ensures they are representative of the entire mat. Note who marks out the core locations. Perform density tests with the nuclear gauge at the core locations prior to coring so that results can be compared, and gauge correlation and offset can be established. Core the entire depth of the mat. Mark the core number and location. Fill the core hole with either hot mix or cold patch material. The material must be mechanically compacted to refusal and finished to just above the surface of the adjacent asphalt.

Add Section 32 15 40

SECTION 32 15 40
CRUSHED AGGREGATE SURFACES

PART 1 GENERAL

1.1 SECTION INCLUDES

A. Repairing gravel (crushed aggregate) surfaces

1.2 SURFACE REPAIR

A. Trenches excavated through gravel surfaced areas such as roads, temporary turnarounds, driveways, etc. shall be restored according to this specification.

PART 2 PRODUCTS

2.1 GENERAL

A. Gravel shall be tough, durable crushed aggregate meeting AASHTO T-27 requirements.

2.2 GRADATION REQUIREMENTS

A. Aggregates used for surfaced areas such as roads, temporary turnarounds, driveways, etc. must meet the following gradation:

Sieve #	% Passing
1″	100%
¾″	85 – 100%
No. 4	45 – 65%
No. 10	10 – 30%
No. 200	5 – 10%

PART 3 EXECUTION

3.1 GENERAL

A. The gravel layer thickness shall conform to geotechnical recommendations, whereas 2 inches of gravel over 8 inches of untreated base course material shall

be a minimum thickness. Alternatively, RAP material may be used in lieu of gravel

B. The gravel shall be placed in the trench at the time it is backfilled. The surface shall be maintained by blading, sprinkling, rolling, adding gravel, etc. to maintain a safe, uniform surface satisfactory to the Engineer. Any excess material shall be removed immediately.

SECTION 32 16 13
DRIVEWAY, SIDEWALK, CURB, GUTTER

PART 3 EXECUTION

3.4 CONTRACTION JOINTS

D. Curb, Gutter, Waterway

Revise paragraph 1 to read as follows:

1. Place joints at intervals not exceeding 10 feet.

Add subpart 3.10 as follows:

3.10 CONCRETE CHIPS AND CRACKS

A. All concrete sidewalk, sidewalk ramps, and curb and gutter shall be removed and reconstructed if two or more cracks extend across the entire structure in any direction within a section.

B. All concrete sidewalk, sidewalk ramps, and curb and gutter shall be repaired for chips larger than ¾" in diameter. If more than five chips occur within one section of concrete, entire section shall be replaced.

C. All concrete sidewalk, sidewalk ramps, and curb and gutter shall be removed and reconstructed if a chip larger than ¾" in diameter is in the structure and a crack originates from the chip.

D. All concrete sidewalk, sidewalk ramps, and curb and gutter shall be ground and caulked if a crack is displaced and the displacement is less than 3/16" vertically or horizontally.

E. All concrete sidewalk, sidewalk ramps, and curb and gutter shall be removed and reconstructed if a crack is displaced more than 3/16" vertically or horizontally.

F. All concrete sidewalk, sidewalk ramps, and curb and gutter shall be removed and reconstructed if spalling over ¼" deep has occurred over two square feet within a section of concrete.

G. All winter repairs shall be bonded for, if needed, to ensure the integrity of the repair.

H. All requirements are guidelines for inspection. Inspectors may require additional repair/replacement if, in their opinion, additional measures are required.

I. All reconstructed sidewalk ramps shall be installed according to Herriman City Standards.

SECTION 32 17 23S
PAVEMENT MARKING PAINT

PART 1 GENERAL

1.1 SECTION INCLUDES

A. Furnish acrylic water-based pavement marking paint. Refer to this Section, article 2.2 for resin requirement.

B. Apply to hot mix asphalt or Portland cement concrete pavement as longitudinal lines, transverse markings, contrast lines, and other related markings.

C. Remove pavement markings.

1.2 RELATED SECTIONS Not Used

1.3 REFERENCES

A. AASHTO M 247: Glass Beads Used in Traffic Paints

B. ASTM D 562: Consistency of Paints Measuring Krebs Unit (KU) Viscosity Using a Stormer-Type Viscometer

C. ASTM D 1155: Roundness of Glass Spheres

D. ASTM D 1475: Density of Liquid Coatings, Inks, and Related Products

E. ASTM D 1644: Nonvolatile Content of Varnishes

F. ASTM D 2205: Selection of Tests for Traffic Paints

G. ASTM D 2743: Traffic Paint Vehicle Solids by Spectroscopy and Gas Chromatography

H. ASTM D 2805: Hiding Power of Paints by Reflectometry

I. ASTM D 3723: Pigment Content of Water-Emulsion Paints by Low-Temperature Ashing

J. ASTM D 3960: Determining Volatile Organic Compound (VOC) Content of Paints and Related Coatings

K. ASTM D 5381: X-Ray Fluorescence (XRF) Spectroscopy of Pigments and Extenders

L. ASTM E 1347: Color and Color-Difference Measurement by Tristimulus (Filter) Colorimetry

M. Environmental Protection Agency Testing Methods

N. Federal Specification

O. Federal Standards

P. Manual on Uniform Traffic Control Devices (MUTCD)

1.4 DEFINITIONS

A. Longitudinal Markings – pavement markings that are generally placed parallel and adjacent to the flow of traffic such as lane lines, center lines, edge lines, channelizing lines, and others.

B. Transverse Markings – pavement markings that are generally placed perpendicular and across the flow of traffic such as shoulder markings; word, symbol, and arrow markings; stop lines; crosswalk lines; speed measurement markings; parking space markings; and others.

C. Long-term stationary – work that occupies a location more than 3 days.

1.5 SUBMITTALS

A. Documentation of the manufacturer and production batch identification for the paint used.

1.6 ACCEPTANCE

A. Provide fixtures such as ball valves, gate valves, or others on paint truck for the purposes of obtaining field samples.

B. The City will:

1. Accept Pavement Marking Paint from qualified manufacturer supplied samples.

2. Sample from the applicator's yard, at the City's discretion, for acceptance.

C. Stop all agitation before sample is drawn.

D. The Engineer will:

1. Visually inspect longitudinal lines and transverse markings to verify compliance with the required dimensions.
2. Inspect at the end of each production day or more frequently as required.
3. Verify quantities applied by either of the following methods:
    a. Measuring both paint and bead tanks before and after application.
    b. Witnessing the meter readings before and after application.
        i. A printout of meter readings instead of witnessing may be accepted at the Engineer's discretion.
4. Sample in the field according to the UDOT Quality Management Plan 513, Pavement Marking Paint and the UDOT Minimum Sampling and Testing Requirements.

E. Repaint any line or legend failing to meet bead application rates and dimensional requirements.

1. Do not remove earlier application.

F. Price Reductions

1. The City price reductions for pavement markings installed below the specified wet mil thickness are outlined in Table 1.

Table 1

Price Reduction for Wet Mil Thickness	
Less than 2 percent below the specified mil thickness	1.00
Less than10 percent below the Specified wet mil thickness	0.75
Less than15 percent below the Specified wet mil thickness	0.50
15 percent or more below the Specified wet mil thickness	0.00 *

* Repaint pavement markings at no cost to the City. Do not remove earlier application.

2. The City will apply price reductions for applied pavement markings that do not meet the requirements of Table 4 when the batch is sampled at the applicator's yard for quality verification according to UDOT Quality Management Plan 513, Pavement Marking Paint.

a. Apply the lowest pay factor from Tables 2 and 3.

3. The City will require repainting for pavement markings more than five percentage points below total solids, pigment, or nonvolatile vehicle properties from Table 4 when the project is sampled for quality verification according to Minimum Sampling and Testing Requirements.

Table 2

Price Reduction for Total Solids, Pigment and Non-Volatile Vehicle	**Pay Factor**
Less than 0.5 percent below or above the specified percentage	1.00
Less than 1.0 percent below the specified percentage	0.95
Less than 2.0 percent below the specified percentage	0.85
2.0 percent or more below the specified percentage	0.00 *

*Repaint pavement markings at no cost to the City. Do not remove earlier application.

Table 3

Price Reductions for remaining requirements of Table 4	Pay Factor
Less than 0.2 percent deficient	1.00
Less than1 percent deficient	0.90
Less than 2 percent deficient	0.80
Less than 3 percent deficient	0.70
Less than 4 percent deficient	0.60
Less than 5 percent deficient	0.50
5 percent or more below specified quantitative requirements	0.00 *

*Repaint pavement markings at no cost to the City. Do not remove earlier application.

PART 2 PRODUCTS

2.1 PAINT

A. Meet the requirements for Acrylic Water Based Paint specified in Table 4.

Table 4

Paint Requirements				
Property	White	Yellow	Black	Test
Pigment – Percent by weight, minimum	62.0	62.0	62.0	ASTM D 3723
Total Solids – Percent by weight, minimum	77.0	77.0	77.0	ASTM D 1644
Nonvolatile vehicle – Percent by weight vehicle, minimum*	43.0	43.0	43.0	ASTM D 3723 ASTM D 1644
Viscosity, KU @ 77 degrees F	80 – 95	80 – 95	80 – 95	ASTM D 562
Density, lb/gal, minimum	14.0	14.0	14.0	ASTM D 1475
Volatile Organic Content (VOC) – lb/gal, maximum	1.25	1.25	1.25	ASTM D 3960
Titanium Dioxide Content, lb/gal	1.0 min	0.2 max	N/A	ASTM D 5381
Color Definition	37875	33538	N/A	Federal Standard 595B
Directional Reflectance, Minimum	90.0	50.0	N/A	ASTM E 1347
Dry Opacity – Minimum (5 mils wet)	0.95	0.95	N/A	ASTM D 2805

* Binder – 100 percent acrylic cross-linking polymer, by weight, as determined by infrared analysis and other chemical analysis available to the City. Refer to ASTM D 2205.

A. No-Pick-Up Time

1. Paint may not smear or track three minutes after application to the roadway using standard application equipment, at the mil thickness required, and with an ambient shaded temperature of at least 50 degrees F.

B. Additional Requirements

1. Free of lead, chromium, or other related heavy metals. Refer to ASTM D 5381.
2. Refer to ASTM D 2743 and ASTM D 5381 for tests used to verify paint samples meet ASTM requirements.

2.2 GLASS SPHERES (BEADS) USED IN PAVEMENT MARKING PAINT

A. Heavy metal concentration: Manufacturer must provide a certificate of compliance stating that all beads contain no more than the amounts listed for the following materials as determined by testing performed according to EPA test methods 3052 and 6010C. Other suitable x-ray fluorescence spectrometry analysis methods may be used to screen samples of glass spheres for arsenic, antimony, and lead content.

Table 5

Heavy Metal Materials	
Material	**Level (ppm, total)**
Arsenic	200
Antimony	200
Lead	200

B. Longitudinal Lines – Refer to AASHTO M 247, Specific Properties, with the following exceptions:

1. Gradation:

Table 6

Gradation	
Sieve Size	**Accumulated Percent Passing**
No. 18	65 – 80
No. 30	30 – 50
No. 50	0 – 5

C. **Coating –** Dual coating for optimum adhesion and embedment.

D. **Roundness –** 80 percent true spheres below the number 30 sieve. Refer to ASTM D 1155

E. **Color/Clarity –** Colorless/clear and free of carbon residue.

F. **Refractive Index –** Minimum 1.51 by oil immersion method.

G. **Air Inclusions –** Less than 5 percent by visual inspection.

H. **Hardness –** Beads above the number 30 sieve exhibit an average hardness of C70.5 when measured using the Rockwell C scale method and using a minimum sample of 100 beads.

I. **Crushing Strength –** Beads above the number 30 sieve exhibit an average crushing strength of 60,000 psi when measured by the L/D2 method and with a minimum sample of 100 beads.

J. **Chemical Resistance –** Beads resistant to hydrochloric acid, water, calcium chloride, and sodium sulfide. TT-B Federal Specification 1325C sections 4.3.6 to 4.3.9.

K. **Transverse Markings –** Refer to AASHTO M 247, Specific Properties, with the following exceptions:

1. Gradation:

Table 7

Gradation	
Sieve Size	**Accumulated Percent Passing**
No. 20	90 – 95
No. 30	45 – 70
No. 50	5 – 25
No. 80	0 – 5

L. **Coating –** Dual coating for optimum adhesion and embedment.

M. **Roundness –** The glass beads will have at least 75 percent true spheres.

N. **Refractive index –** Minimum 1.51 by oil immersion method.

O. **Air Inclusions –** Less than 10 percent by visual inspection.

P. Have at least 80 percent true spheres.

Q. **Beads used in Temporary Pavement Markings.** Meet the above or AASHTO M 247 Type II uniform gradation.

PART 3 EXECUTION

3.1 PREPARATION

A. Line Control

1. Establish control points at 100 ft intervals on tangent and at 50 ft intervals on curves.

2. Maintain the line within 2 inches of the established control points and mark the roadway between control points as needed.

   a. Remove paint that is not placed within tolerance of the established control points and replace at no cost to the City. Refer to this Section, article 3.4.

   b. Maintain the line dimension within 10 percent of the width and length dimensions defined in Standard Drawings.

B. Remove dirt, loose aggregate, curing compounds, and other foreign material and follow manufacturer's recommendations for surface preparation.

3.2 APPLICATION

A. Use Qualified Applicators as identified in UDOT Quality Management Plan 513, Pavement Marking Paint.

B. Apply Pavement marking paint at the following wet mil thickness:

1. **13-16 wet mils** for all longitudinal markings placed over existing markings.
2. **18-20 wet mils** for all longitudinal markings placed over new pavement or ground and/or prepared surfaces.
3. Use the following calculation to determine wet mil thickness if approximation is outside the range for the desired line type.

Calculation – Determine wet mil thickness

4 inch Solid Line – Wet mils = $\frac{4812.516}{\text{ft3/gal mil/ft X ft/gal (add in 6")}}$

4 inch Broken Line – Wet mils = $\frac{19250.064}{\text{ft3/gal mil/ft X ft/gal}}$

6 inch Solid Line – Wet mils = $\frac{7218.774}{\text{ft3/gal mil/ft X ft/gal}}$

8 inch Solid Line – Wet mils = $\frac{2406.258}{\text{ft3/gal mil/ft X ft/gal}}$

Where: X = application rate. (Meter readings or dipping tanks).

4. **Approximate** application rate for required mil thickness requirements:

   a. inch Solid Line – From 190 to 240 ft/gal

   b. inch Broken Line – From 760 to 960 ft/gal

   c. 6 inch Broken Line – From 1140 to 1440 ft/gal iv. 8 inch Solid Line – From 95 to 120 ft/gal. Use the following calculation to determine wet mil thickness if approximation is outside the range for the desired line type.

C. Refer to Table 1 for price reduction of pavement markings that are less than required wet mils in thickness.

D. No additional payment for pavement markings placed in excess of required wet mils in thickness or exceeding dimensional requirements outlined in this Section, article 3.2 paragraph B

E. Glass Sphere (Beads) – Apply at least 8 lb/gal of paint, the full length and width of line and pavement markings.

   1. Calibrate bead guns and measure bead distribution according to UDOT Materials Manual of Instruction 932, Procedure for Sampling and Accepting Pavement Marking Paint and Beads.

   2. Do not apply glass beads to contrast lines (black paint).

F. **Application Timing:** Do not begin striping operations earlier than 72 hours after placement of any seal coat surface (chip, slurry, microsurfacing, spray applied, sand, etc.). Complete all marking operations within 14 days of placement of the seal coat.

1. Use of multiple applications to achieve required mil thickness is acceptable.

G. Apply lines and pavement markings only when the air and pavement temperature are:

1. 50 degrees F and rising for Acrylic Water Based Paint.

i. Non-grooved lines and markings applied at temperatures below 50 degrees F are temporary and must be repainted, when temperature conditions are met.

2. Do not remove earlier application.

i. Grooved lines and markings applied below 50 degrees F must be removed and reapplied when temperature conditions are met.

H. Apply lines and pavement markings as per project plans. Match existing marking configurations where configurations are not defined. Comply with MUTCD marking configurations where existing configurations are not present.

3.3 CONTRACTOR QUALITY CONTROL

A. Adhere to the requirements of UDOT Quality Management Plan 513, Pavement Marking Paint

B. Submit yield calculations and supporting measurement documentation to Engineer or City within 3 days of placement.

3.4 REMOVE PAVEMENT MARKINGS

A. Use equipment specifically designed for removal of pavement marking material.

B. Use one of these removal methods

1. High pressure water spray

2. Sand blasting

3. Shot blasting

C. Do not use grinding without prior written approval from the Engineer.

1. The Engineer will consult with the Region Traffic Operations Engineer before issuing written approval.

D. Do not eliminate or obscure existing striping, instead of removal, by covering with black paint or any other covering.

1. The Engineer may grant prior written approval for use of black paint or other obscuring material for work durations shorter than "long term stationary" as defined in this Section, article 1.4 and in the Temporary Traffic Control section of the MUTCD.

SECTION 32 31 13
CHAIN LINK FENCES AND GATES

PART 2 PRODUCTS

2.1 GENERAL

Amend paragraph C to read as follows:

C. Polyvinyl Chloride (PVC): With PVC coated materials, paint all fittings, hardware and accessories as indicated to match PVC color. The fabric shall be hot dipped galvanized steel wire complying with ASTM A 392 and coated with a continuous PVC bonding process (minimum 15 mil thickness) in accordance with ASTM F 668. The posts shall be schedule 40 hot dipped galvanized steel coated with a continuous PVC bonding process (minimum 15 mil thickness) in accordance with ASTM F 668. Color of PVC coating shall be as indicated and applied free of voids, cracks, tears and shall have a smooth and lustrous surface.

2.3 BARBED WIRE

Amend article A to read as follows:

A. Three strand, two wires per strand, 12-1/2 gage wire with 14-gage, 4 point round barbs spaced approximately 5-inches on center. Barbed wire shall be zinc (galvanized) coated.

2.6 POSTS, CAPS, RAILS, COUPLINGS

Amend Table 1 to read as follows:

Table 1 - Posts, Frames, Stiffeners, Rails	
Proposed Use	**Nominal Type and Size**
End, corner, slope and gate posts for single gates 6-feet or less in width and double gates 12-feet or less in width for fence less than 72-inches high	2" pipe

Table 1 - Posts, Frames, Stiffeners, Rails	
Proposed Use	**Nominal Type and Size**
End, corner, slope and gate posts for single gates 6-feet or less in width and double gates 12-feet or less in width for fence 72-inches or higher	2-1/2" pipe
Gate posts for single swing gates over 6-feet, but not over 13-feet in width and double swing gates over 12-feet, but not over 26-feet in width or for all slide gates with leaves larger than 6-feet	3-1/2" pipe
Gate posts for single swing gates over 13-feet, but not over 18-feet in width and double swing gates over 26-feet, but not over 36-feet width	6" pipe
Gate posts for single swing gates over 18-feet in width and double swing gates over 36-feet in width	8" pipe
Frame for gates	1-1/2" pipe
Stiffeners for gates	1-1/4" pipe
Line posts for fences 72-inches high or higher	2" pipe
Line posts for fences less than 72-inches high	1-1/2" pipe
Top rail	1-5/8" pipe
Bottom rail	6-gage, coiled spring steel tension wire

Amend article C to read as follows:

C. Caps: Pressed galvanized steel or malleable iron designed to fit securely over post ends forming a weather tight closure. Where top rail is used, provide cap to permit passage of top rail.

2.6 SUPPORT OR EXTENSION ARM

Add articles D and E as follows:

D. Extension arms for gate and other fence posts shall be fabricated from galvanized steel.
E. Gate posts shall be provided with vertical extension arms while all other posts shall have 45° angle extension arms.

2.7 GATES

Add article E as follows:

E. Gates shall be provided with an appropriate catch and locking attachment. Double swing gates shall be provided with a center rest and catch mechanism. Stops shall be provided to hold gates open.

PART 3 EXECUTION

3.3 INSTALLATION OF POSTS

Amend article D to read as follows:

D. Minimum diameter of the concrete bases shall be the diameter of the post plus 10-inches. The post shall be centered in the concrete base. Concrete shall be wet set; no dry mix shall be used. Place a minimum of 6-inches concrete below each post. Concrete shall be finished with a minimum of 1-inch of concrete left above finish grade in all directions to allow water to drain away from the post. Depth of post in concrete as follows:

1. Line Posts: 18-inches
2. End, Pull, Corner and Gate Posts Less Than six (6) inches Diameter: 24 inches
3. Gate Posts: 30 inches.

SECTION 32 31 16
WELDED WIRE FENCES AND GATES

PART 2 PRODUCTS

2.1 GENERAL

Amend article C to read as follows:

C. Polyvinyl Chloride (PVC): With PVC coated materials, paint all fittings, hardware and accessories as indicated to match PVC color. The fabric shall be hot dipped galvanized steel wire complying with ASTM A 392 and coated with a continuous PVC bonding process (minimum 15 mil thickness) in accordance with ASTM F 668. The posts shall be schedule 40 hot dipped galvanized steel coated with a continuous PVC bonding process (minimum 15 mil thickness) in accordance with ASTM F 668. Color of PVC coating shall be as indicated and applied free of voids, cracks, tears and shall have a smooth and lustrous surface.

2.3 BARBED WIRE

Amend article A to read as follows:

A. Two wire per strand, 12-1/2 gage wire with 14 gage, 4 point round barbs spaced approximately 5-inches on center. Barbed wire shall be zinc (galvanized) coated. Number of strands as called for on the drawings.

2.4 UNTREATED WOOD POSTS FOR LINES, GATES, ENDS, AND CORNERS

Amend article A to read as follows:

A. Line Posts: 10-inches minimum circumference Juniper or acceptable alternative approved by ENGINEER. Rectangular line posts shall have a minimum cross section area of 12-inches square. Square members may be rough sawn or finished.

2.5 TREATED WOOD POSTS AND WOOD BRACE RAILS

Add article E to read as follows:

E. If the treated surface of a post has been disturbed or damaged in handling or installation, the exposed, untreated wood shall receive a minimum of two coats of the same compound with which the post was originally treated.

2.7 TUBULAR STEEL FRAME GATE WITH WIRE FABRIC

Amend article A to read as follows:

A. Gate frames manufactured with steel pipe. 1-inch nominal diameter minimum steel pipe. Frames shall have caps or seals to cover the open ends of square corners of gate frames.

PART 3 EXECUTION

3.2 INSTALLATION

Amend article D as follows:

D. Set metal, corner, end, gate, and brace posts in concrete footings that are 12-inches larger in diameter than the post and at least 30-inches deep. Concrete shall be finished with a minimum of 1-inch of concrete left above finish grade in all directions to allow water to drain away from the post. Install no materials on posts or place strain on guys until 7-days after placing concrete.

Amend article L as follows:

L. Construct gates to operate freely without sag. Provide fabric, fittings, and locks.

Add articles N, O, and P to read as follows:

N. Barbed wire fencing shall be constructed of 4-strands of wire. Construction of 4-strand barbed wire fencing shall require 6-foot posts. Install barbed wire on the inside of the post, away from traffic.
O. At sag sections, or at points of vertical alignment change in concrete foundations, set braced posts at least 30-inches into the ground for 6-foot posts.

Place a minimum 3-inch concrete base below each brace post. Concrete shall be minimum 18-inches in diameter. Expose 1-inch of concrete above the finished grade, finish off and slope to drain away from the post. Backfill and compact posts.

P. Wire mesh fabric shall be of the width indicated in the Contract Documents. Install fence fabric on the inside of the post, away from traffic. Remove all sags from wire mesh without causing tension crimps to fail.

Add the following as Section 32 31 23

SECTION 32 31 23
PLASTIC FENCES AND GATES

PART 1 GENERAL

1.1 SECTION INCLUDES

A. Vinyl fences, posts, rails, stats and gates.

1.2 INSTALLER QUALIFICATIONS

A. All fencing shall be installed by mechanics skilled and experienced in erecting fences of the particular type to be installed and shall be in accordance with Herriman City specifications.

PART 2 PRODUCTS

2.1 GENERAL

A. All vinyl products shall meet or exceed minimum standards and tolerances set forth by ASTM for length, nominal thickness, heat shrinkage, weathering, color, chalking, profile, impact resistance, warp or bow, etc. Specifically refer to ASTM D 1784-20, 'Standard Classification System and Basis for Specification for Rigid Poly(Vinyl Chloride) (PVC) Compounds and Chlorinated Poly(Vinyl Chloride) (CPVC) Compounds'.
B. All vinyl components shall be covered by a non-prorated limited lifetime manufacturer warranty.
C. All hardware and fasteners shall be galvanized or stainless steel. Manufacturer produced hardware and fasteners shall be used where possible.
D. All installed vinyl fencing shall be designed and constructed to withstand 90 mph wind loads as determined by the Uniform Building Code.

2.2 VINYL POSTS

A. Post dimensions shall be 5.0 inches square (outside dimension) with minimum wall thickness of 0.17 inches (heavy wall). Posts may have pre-formed holes for rails.

B. All concrete used for reinforcing and setting fence posts shall be Class 3000 by APWA standards and specifications. Cement posts with a minimum of 120 lbs. of Quick Crete (1 ½ bags) concrete shall be pre-mixed and wet set.
C. U-channels shall be installed on either side of each post for privacy fence as required for 90 mph rating. U-channels shall be securely fastened with 1¼" zinc-plated screws.

2.3 VINYL RAILS

A. Rail dimensions shall be 1.5 inches by 5.5 inches ribbed with a minimum wall thickness of 0.09 inches.
B. Metal reinforced top and bottom rails of standard vinyl privacy fence shall be reinforced with galvanized, stainless steel or other corrosion resistant metal per manufacturer recommendations.

2.4 VINYL SLATS

A. Slat dimensions shall be 6.0 inches by 0.875 inches ribbed with a minimum wall thickness of 0.06 inches.
B. All slats shall be "tongue and groove" style.

2.5 VINYL GATES

A. Vinyl gates shall be installed according to manufacturer recommendations using all necessary hardware to make them self-closing and self-latching.
B. Gates less than or equal to four feet (4') in width may be all vinyl construction and shall be purchased pre-assembled from the fencing manufacturer where available. Where special gate widths are necessary due to site constraints, gates smaller than four feet (4') in width shall be assembled using gate kits or instructions provided by the manufacturer. Two standard four-foot (4') gates may be used to create an opening up to eight feet (8') wide.
C. Vinyl gates wider than four feet (4') shall be reinforced with a suitable material and configuration or otherwise constructed to enable them to span the desired distance without sagging or ceasing to swing properly or otherwise become structurally or functionally unsound. In most instances, a steel or aluminum frame with a vinyl gate façade or a steel or aluminum gate powder coated to match the vinyl fence color is preferable. Consult the manufacturer for recommendation on construction of gates wider than four feet (4').

PART 3 EXECUTION

3.1 MANUFACTURER'S RECOMMENDATIONS

A. Install fences and fencing components according to manufacturer's recommendations. Where recommendations of the manufacturer are more stringent or conservative than Herriman City specifications, the recommendations of the manufacturer shall be followed.

3.2 FENCE ALIGNMENT

A. The fence shall be placed in the alignment specified in the development plat and/or plans.

B. Alignment of the installed fence and fence components, both plan and profile, shall be in straight lines so far as the conditions of the site permit.

3.3 POST INSTALLATION

A. Post spacing shall be no greater than 6.0 feet on center.
B. Post holes shall be a minimum 12.0 inches diameter by 36.0 inches depth. In all cases, the embedment depth of the posts shall be minimum 36.0 inches below finished grade. Posts shall be aligned and plumbed, and post holes shall be filled with concrete to within 3.0 inches of finished grade. Concrete post mix shall be allowed to cure a minimum of one week before rails and slats are installed.
C. Post holes shall be augured, not greater than twelve-inch (12") auger, or hand dug.
D. Fasten post caps on every post according to manufacturer recommendations.

3.4 RAIL INSTALLATION

A. Wherever possible, rails shall span two post spacing (12 feet). Rail joints in adjacent vertical rail levels shall be staggered horizontally in the fence posts.
B. The bottom rail of a standard vinyl privacy fence should be located approximately 2.0 inches above the finished grade elevation. The bottom rail of a standard vinyl 4 rail fence should be located approximately 9.0 inches above the finished grade elevation. Adjacent vertical rails of standard vinyl 4 rail fences should be placed approximately 9.0 inches between.
C. Fasten all rails according to manufacturer specifications.

3.5 GATE INSTALLATION

A. Vinyl gates shall be installed according to manufacturer recommendations using all necessary hardware to make them self-closing and self-latching.
B. Gates less than or equal to four feet (4') in width may be all vinyl construction and shall be purchased pre-assembled from the fencing manufacturer where available. Where special gate widths are necessary due to site constraints, gates smaller than four feet (4') in width shall be assembled using gate kits or instructions provided by the manufacturer. Two standard four-foot (4') gates may be used to create an opening up to eight feet (8') wide.
C. Vinyl gates wider than four feet (4') shall be reinforced with a suitable material and configuration or otherwise constructed to enable them to span the desired distance without sagging or ceasing to swing properly or otherwise become structurally or functionally unsound. In most instances, a steel or aluminum frame with a vinyl gate façade or a steel or aluminum gate powder coated to match the vinyl fence color is preferable. Consult the manufacturer for recommendation on construction of gates wider than four feet (4').

3.6 CLEAN UP

A. The installer shall leave the fence construction area free from excess dirt, rubble, concrete, scraps, debris, packaging or other waste directly resulting from the fence construction activities.

Add the following as Section 32 31 35

SECTION 32 31 35
PRECAST CONCRETE FENCING

PART 1 GENERAL

1.1 SECTION INCLUDES

A. Precast concrete fencing, posts, panels and footings.

1.2 INSTALLER QUALIFICATIONS

A. All fencing shall be installed by mechanics skilled and experienced in erecting fences of the particular type to be installed and shall be in accordance with Herriman City specifications.

PART 2 PRODUCTS

2.1 GENERAL

A. All concrete products shall meet or exceed applicable minimum standards and tolerances set forth by ASTM for strength, hardness, deformation, durability, etc. Similarly, other products, such as curing compounds, stains, reinforcement, fasteners, grout, hardware, etc., used in the manufacturing, production, construction and/or installation of concrete fences shall meet or exceed applicable minimum standards and tolerances set forth by ASTM

B. Glass fiber may be used as secondary reinforcement in all concrete components of the fence. Fiber reinforcement shall conform to Section 03 20 00.

C. Section 03 40 00 Precast Concrete shall apply, where applicable, to Work provided under this section

D. The work shall be performed in accordance with all applicable federal, state and local safety laws and regulations, including the Occupational Health and Safety Act of 1970 as amended (OSHA). Responsibility for awareness and observation of any recommended practices or regulations concerning the handling, placement, or installation of construction materials shall be that of the Developer

E. Where recommendations of the manufacturer or design engineer are more stringent or conservative than Herriman City specifications, the more conservative specifications shall be followed.

F. Herriman City reserves the right to require the installer, at the installer's expense, to perform all tests necessary to ensure that the materials used in the fence or its installation conform to the standards and specifications outlined.
G. All installed concrete fencing shall be designed to withstand 90 mph wind loads as designated by the Uniform Building Code.
H. If requested by the City, the Developer shall provide drawings and details stamped by an engineer licensed in the State of Utah which adequately describe the precast fencing elements including:
    1. shape and dimension of precast components,
    2. size, quantity and details of the reinforcing steel,
    3. quantity, size and type of connection hardware,
    4. size and location of drain openings, and
    5. size, type and details of necessary lifting mechanisms.
I. If requested by the City, the installer shall provide design calculations stamped by an engineer licensed in the State of Utah which include a summary of all design parameters including material types, strength values, allowable stresses, assumed loads, load combinations, etc.
J. If requested by the City, the Developer shall provide a copy of a soils report prepared by an engineer licensed in the State of Utah for the project.

2.2 POSTS AND POST CAPS

A. Post centers shall be spaced 12.0 feet apart.
B. Post dimensions shall be at least 6.0 feet high by 20.0 inches square (outside dimension) and shall have a hollow center to facilitate attaching the post to the footings by a dowel and grout connection.
C. Posts shall be reinforced with one vertical #5 bar in each corner of the post and six #3 horizontal tie bars spaced evenly (12.0 inches on center) up the vertical height of the post. Ensure that 1¼" of cover is maintained at all points on the post. Reinforcement shall conform to specifications given in Section 03 20 00.
D. The method of post attachment to the concrete footing shall be by embedding two #4 dowels placed near the center of the footing which extend from at least 1.0 foot down into the footing to at least 3.0 feet up into the hollow center of the post. The hollow center of the post shall then be grouted full to secure the bond between the footing and the post. Other mechanical means of attachment, when accompanied by engineering calculations and drawings demonstrating the structural integrity of the connection under applicable design loads, may be used.
E. Posts shall have the same finish and texture on all exposed sides.

F. All concrete used for posts shall be Class 4000 per Section 03 30 04.

2.3 PANELS AND PANEL CAPS

A. Panels shall at least be 6.0 feet high. The thickness of the panel shall be no less than 4.0 inches. The length of the panels shall be such that the panels can be placed between and connected mechanically to the posts which are spaced on 12.0-foot centers.
B. Where used, panel caps shall have typical dimensions of 8.0 inches wide with a minimum thickness of 3.0 inches. The length of the panel cap shall be appropriate to cover the length of the panel.
C. Panels shall be reinforced with #3 bars placed 12.0 inches on center each way to within 1.5 inches from the panel edges. Equivalent welded steel wire fabric at the front and back of the panel may be substituted for the #3 bar configuration. Either type of reinforcement shall conform to the specifications set forth in Section 03 20 00. Ensure that 1½" of cover is maintained.
D. Panel caps shall be reinforced by two #4 bars spaced 2½" on either side of the centerline of the cap. Reinforcement shall conform to specifications given in Section 03 20 00. Ensure that 1½" of cover is maintained.
E. Panels shall have the same finish and texture on both sides.

PART 3 EXECUTION

3.1 FENCE ALIGNMENT

A. The fence shall be constructed in the alignment specified in the development plat and/or plans.
B. Alignment of the installed fence and fence components, both plan and profile, shall be in straight lines so far as conditions of the site permit. Posts and panels shall be installed plumb.

3.2 FOOTINGS

A. Footing centers shall be spaced 12.0 feet apart.
B. Footings shall be a minimum 24.0 inches square by 42.0 inches deep. In all cases, the embedment depth of the footing shall be minimum 42.0 inches below finished grade.
C. Reinforcement in the footings shall be by one vertical #5 bar in each corner of the footing with five #3 horizontal tie bars spaced 6.0 inches on center from the top of the footing and one #3 horizontal tie bar placed 4.0 inches from the bottom of the footing. Additional reinforcement may be required as specified

by the manufacturer's design calculations. Ensure that 3.0 inches of cover is maintained on footing reinforcement.

D. All concrete used for footings shall be Class 3000 per Section 03 30 04 standards and specifications. All concrete for footings shall be pre-mixed and wet set.
E. Where a precast concrete fence post shares the same footing as a gate post of some other material, the size of the footing shall be increased to accommodate both posts.
F. Freshly poured concrete shall be tamped with a steel rod or vibrated with a mechanical vibrator until the concrete is thoroughly consolidated and without void.
G. Excavations for footings shall be to undisturbed soil or to the depth noted on the engineered drawings. Leave the bottom bearing surface clean and smooth. If footing excavations are made deeper than intended, concrete shall be used for fill.

3.3 CLEAN UP

A. The installer shall leave the fence construction area free from excess dirt, rubble, concrete, scraps, debris, packaging or other waste directly or indirectly resulting from the fence construction activities.

Replace Section 32 84 23 with the following:

SECTION 32 84 23
UNDERGROUND IRRIGATION SYSTEMS

PART 1 GENERAL

1.1 SUMMARY

A. Section includes:
   1. Underground irrigation systems complete with heads, valves, controls, and accessories.
B. Related sections:
   1. Section 32 94 23 Planting.
   2. Trenching for Pipework: Excavating, pipe bedding, backfilling and compacting.
   3. Excavation: Excavating fir structures and appurtenant items.
   4. Fill and Backfill: Pipe bedding and excavation backfilling.
   5. Backflow Preventer.
   6. Cast-in-Place Concrete: Concrete for structures and thrust blocks.

1.2 REFERENCE STANDARDS

A. NFPA 70: National Electric Code.
B. ASTM: American Society for Testing and Materials
C. IA: The Irrigation Association: Main BMP Document, Landscape Irrigation Scheduling and Water Management Document.
D. ASIC: American Society of Irrigation Consultants: ASIC Grounding Guideline
E. City Codes/Ordinances relating to Landscape and Irrigation
F. Jordan Valley Water Conservancy District Water Efficiency Standards

1.3 DEFINITIONS

A. Water Supply: Culinary and/or secondary pumping, piping, and components provided and installed by others to provide irrigation water to this project. Includes but is not limited to: storage ponds, pump stations, saddles, nipples, spools, shut-off valves, corporation stop valves, water meters, pressure regulation valves, and piping or components upstream of (or prior to) the Point-of-Connection.
B. Point-of-Connection: Location where the Contractor shall tie into the water supply for landscape irrigation needs and use. Tie to existing piping.

C. Main Line Piping: Pressurized piping downstream of the point-of-connection to provide water to remote control valves and quick coupling valves. Normally piping is under constant pressure.
D. Lateral Line Piping: Circuit piping downstream of the remote-control valves to provide water to sprinkler heads, drip system, or bubblers. Normally piping is under pressure only when control valve is in operation.

1.4 PERFORMANCE REQUIREMENTS

A. The work to be performed under this Section shall consist of furnishing all labor and materials necessary to construct a complete working and tested underground sprinkler irrigation system per all drawings and specifications, providing uniform coverage on all lawn and planting areas on the site without overspray onto hardscape, buildings, or other site features. Reduce typical spacing by 25% for rotors and 25% for spray heads to account for wind drift. Include system maintenance and warranties.
B. The efficiency of the completed irrigation system shall meet the following minimum standards:
    1. Circuits using spray sprinklers shall perform at a minimum 60% efficiency.
    2. Circuits using rotor sprinklers shall perform at a minimum 70% efficiency.
    3. Efficiency shall be determined by an independent water audit performed by a certified irrigation auditor selected by the Owner. The Contractor shall include in his bid price the cost of this audit. The audit shall be conducted after substantial completion and before final acceptance of the irrigation system.
C. The Contractor shall perform, but not be limited to, all of the following functions: paying all connection fees, deposits, and all other charges related to the connection to the water source; obtain all permits; complete all excavation and backfill; provide backflow device, tapping saddle, yoke, stop and waste, concrete vaults and miscellaneous pipe fittings; make necessary road repairs; provide safety barrier; make connection to water source; install all electric valves, valve control devices, isolation gate valves, quick coupling valves, drain valves, meter base, conduit, junction boxes, controller, backflow prevention devices and enclosures, filters and enclosures, and all necessary wiring. All work shall comply with applicable codes and requirements of the utility companies involved.
D. If any or all of the above-mentioned fees or charges are not listed on the bidding schedule or on plan, they shall be included in the bid lump sum price of the irrigation sprinkling system item.

E. Contractor shall verify with the appropriate water district the location of the water service main lines and their respective water pressure and complete all requirements necessary to bring water service to the site. Total cost to be included in the irrigation sprinkling system bid item.
F. The above specification statement supersedes the graphic representation location of the contract limit line. This pertains to the water line location on either side of the street adjacent to the project site.
G. All work shall be done in accordance with the drawings and specifications, as well as all applicable water and electrical codes.
H. The Contractor shall operate, maintain, and guarantee the new system as specified herein until all lawn and plants installed on this project have become established and have been accepted by the Parks Department.

1.5 SUBMITTALS

A. Product Data: Complete set of manufacturer's technical data and installation instructions for all equipment to be installed on the project. Submittal shall be made prior to commencement of any irrigation work.
B. Main line and lateral line pressure test results: Submitted at the time of occurrence.
C. Operation and Maintenance (O&M) Manual:
    1. O&M manual shall contain the following information:
        a. Manufacturer cut sheets and current printed specifications for each element or component of the irrigation system.
        b. Parts list for each operating element of the system.
        c. Manufacturer's printed literature on operation and maintenance of operating elements of the system.
        d. Section listing instructions for overall system operation and maintenance. Include directions for spring start-up and winterization.
    2. Three (3) hard copies and one (1) electronic copy of the O&M manual shall be submitted at least thirty (30) days prior to final inspection and acceptance of the project.
D. Complete As-Built Drawings:
    1. Drawings shall conform to the following criteria:
        a. One (1) 22" x 34" and one (1) 11" x 17" set of drawings shall be submitted.
        b. All submitted drawings shall be in a digital format.
        c. Show detail and dimension changes made during installation.

d. Include field dimension locations of sleeving, points of connection, main line piping, wiring runs not contained in main line pipe trenches, valves and valve boxes, quick coupling valves.
e. Dimensions shall be taken from permanent constructed surfaces, features, or finished edges located at or above finished grade.

2. A complete set of as-built drawings shall also be submitted in electronic digital format (.pdf).
3. As-Built drawings shall be submitted prior to final inspection and acceptance.

E. Controller Map: Each controller shall be equipped with a color-coded copy of the area that the controller services. Include valve zone number, type of plant material irrigated, and zone location on the project. Laminate map with heat shrink clear plastic and mount inside controller.

1.6 QUALITY ASSURANCE

A. Acceptance: Do not install work of this section prior to acceptance of the area by the Owner as being properly prepared to receive said work (i.e., at proper grade, properly compacted, permanent fixtures in place, etc.).
B. Adequate Water Supply: Contractor shall verify that proper connection is available to supply lines and is of adequate size and volume. Perform static water pressure test prior to commencement of work. Notify Owner of problems encountered prior to proceeding.
C. Workmanship: It is the intent of this specification that all materials herein specified meet with the accepted standards of practice relating to the trade.
D. The Contractor shall provide to the City a document or resume which includes the following information:
    1. The Contractor has been installing sprinkler systems on commercial projects for at least ten (10) previous consecutive years.
    2. The Contractor is currently licensed to perform landscape construction in the State of Utah.
    3. The Contractor is bondable and insurable for the work to be performed.
    4. References of at least five (5) projects of similar size and scope completed within the last five (5) years. Three (3) of the projects listed must be located in the general region of the project site.
    5. List of suppliers from whom materials will be obtained for use on this project.

1.7 PROJECT CONDITIONS

A. Any discrepancies between existing site conditions and those indicated on the plans shall be called to the attention of the Parks Department prior to continuance of the project.
B. The Contractor shall use only the equipment and products specified in the construction drawings. No substitution of materials will be allowed on the irrigation system without prior authorization from the Parks Department.
C. During delivery, installation, and storage of materials for the project, all materials shall be protected from contamination, damage, vandalism, and prolonged exposure to sunlight. All material stored at the project site shall be neatly organized in a compact arrangement and storage shall not disrupt the project Owner or other trades on the project site. All material to be installed shall be handled by the Contractor with care to avoid breakage or damage. Materials damaged by the Contractor shall not be used but shall be replaced with new materials at the Contractor's expense.
D. The Contractor shall familiarize himself and his workmen with all hazards and existing utilities prior to commencing work. This shall require local Blue Staking to be completed before any construction activity can begin.

PART 2 PRODUCTS

2.1 GENERAL

A. The Contractor shall provide all materials to be used on this project. The Contractor shall not remove any material purchased for this project from the project site, nor mix these project materials with other contractor-owned materials. The Owner retains the right to purchase and provide project materials.
B. Handling and unloading of all equipment, pipe, and fittings shall be in such a manner as to insure delivery to the job site in a sound, undamaged condition. Any installed equipment or pipe found to be damaged or defective in workmanship or materials shall be rejected and removed and replaced at Contractor's expense.

2.2 PIPE

A. All PVC pipe used on this project for the irrigation system shall conform to the requirements of ASTM -1685. It shall be free of cracks, holes, foreign material, blisters, inside bubbles, wrinkles, and dents.

B. All main line pipe, three (3) inches inside diameter and smaller shall be Schedule 40 PVC solvent weld bell end unless otherwise specified.
C. All main line pipe, four (4) inches inside diameter and larger, shall be PVC Class 200 gasketed bell end (except as required for conversion to metal fittings).
D. All lateral line pipe shall be Schedule 40 PVC solvent weld.
E. Maximum flows allowed through main line and lateral line pipe shall be determined by water speed in the pipe. The maximum water speed allowed in both main lines and lateral lines is five (5) feet per second. The resulting maximum gallons per minute (gpm) allowed to flow through PVC pipes are as follows:

PIPE SIZE	GPM
3/4"	8
1"	12
1-1/4"	22
1-½"	30
2"	50
2-½"	75
3"	110
4"	190
6"	425

For sizes larger than 6", consult manufacturer's recommendations.

F. No bends in pipe shall be permitted. The Contractor shall use elbow fittings of ninety (90), forty-five (45), twenty-two and one half (22-1/2), and eleven and one quarter (11-1/4) degrees as individual situations demand.
G. All pipe used from the main line to the control valves shall be solvent weld Sch. 80 PVC pipe unless otherwise noted or shown on the construction drawings.

2.3 FITTINGS

A. All PVC fittings used on this project for the irrigation system shall conform to the requirements of ASTM D-2466.
B. Main Line Fittings:
   1. All main line fittings four (4) inches inside diameter and larger shall be M.J., flanged, or deep bell push-on, gasketed, ductile iron.
   2. All main line fittings three (3) inches and smaller inside diameter shall be solvent weld Schedule 80 PVC.

3. All main line fittings four (4) inches and larger, whether ductile iron or solvent weld, shall be thrust blocked per details or have integral thrust restraining devices installed per manufacturer's recommendations.
4. All main lines three (3) inches and larger having a horizontal change of direction shall have proper concrete thrust blocks installed or manufacturer's thrust restraining devices. Vertical changes in direction shall require the use of M.J or ductile iron fittings with thrust restraining devices (Mega Lug, Harco Knuckle Joint Restraints, or approved equal) in addition to appropriate concrete thrust blocking. The size and type of thrust block depends on pressure, pipe size, type of soil, and type of fitting. As a general rule, one (1) cubic foot minimum of class AA (AE) Type II concrete is required for each thrust block. Follow thrust blocking details for calculating thrust block size.
5. M.J. tees, Schedule 80 tees with SxT Schedule 80 bushings, or Harco ductile iron service tees are approved on PVC main lines for automatic control valve installation. M.J. fittings shall be greased and wrapped.

C. Lateral Line Fittings:
1. All lateral line fittings shall be solvent weld Schedule 40 PVC.
2. All risers and exposed fittings shall be solvent weld Schedule 80 PVC, including conversions to metal pipe and fixtures, unless otherwise noted on the plans.

D. PVC Cement: Solvent weld or glued joints shall use the following materials:
1. Primer: IPS Weld-On P-70 Primer (purple), ASTM F-656.
2. Cement: IPS Weld-On 711 Heavy Bodied PVC Cement (gray), ASTM D-2564.

2.4 VALVES

A. Master Valve: All master valves shall be as specified in the Irrigation Equipment Schedule. Master valve assembly shall be installed according to detail in drawings.

B. Isolation Gate Valve:
1. Isolation gate valves shall only be used on the main line.
2. Isolation gate valves shall be as specified in the Irrigation Equipment Schedule. Valves shall be hydrostatically pressure tested for 400 P.S.I. and shall be designated for a working pressure of 200 P.S.I. Each valve shall contain a resilient wedge urethane rubber seat. Unless otherwise shown or specified, valves three (3) inches and larger shall have flanged end connections.

3. Buried valves shall have two (2) inch square operating nuts. No handles or wheels will be permitted. Valves inside structures (vaults or valve boxes) may have wheel handles if the valve is two (2) inches or less in size.
4. Threaded Action unions shall be installed on each side of all valves except flanged valves.
5. The Contractor shall provide adequate material for the connection of valves to the system, i.e., adapters, flanges, nuts, bolts, gaskets, etc.
6. All buried main line isolation valves with a (2) inch square operating nut shall be fitted with a four (4) inch minimum diameter pipe sleeve place over the top of the valve vertically and extended to grade. Cover with a ten (10) inch round plastic valve box with bolt down lid and set at finished grade.

D. Remote Control Valve Assembly:
1. Remote control valves shall be as specified in the Irrigation Equipment Schedule.
2. Remote control valves shall be globe configuration, electrically activated, normally closed, forward flow design.
3. All pipe on the control valve assembly shall be Schedule 80 PVC pipe. See detailed drawings.
4. Action unions shall be installed on each side of the control valve assembly, allowing valve to be removed from the box for maintenance without cutting pipe.
5. Each control valve shall have a brass gate or ball valve installed immediately upstream of the valve and located within the same valve box.
6. Flows through each remote-control valve shall not exceed the following limits:

Valve Size	GPM Range
1″	1 - 30
1-½"	31 - 75
2″	76 - 150

7. Each drip remote control valve assembly shall contain the following components:
   a. PVC ball valve.
   b. Inline disc or screen filter with 100 micron/150 mesh filter element.
   c. Remote control valve capable of operating at very low flow levels.
   d. Inline pressure regulator. Pressure regulator may be incorporated with the inline filter if manufactured that way. All components shall be installed according to manufacturer's recommendations, and located

within a single valve box, one valve per box (no multi-valve assemblies permitted).

E. Quick Coupling Valve Assembly:
   1. Quick coupling valves shall be as specified in the Irrigation Equipment Schedule.
   2. Quick coupling valves shall be heavy duty brass, two-piece, single lug locking cap.
   3. The Contractor shall provide to the Owner at least 1 cap lock key and 1 quick coupling key with a swivel hose bib attached. These keys shall be delivered prior to final acceptance of the project.

F. Manual Drain Valve Assembly:
   1. All manual drains shall be three quarter (3/4) inch heavy duty brass ball valve.
   2. Manual drain valves shall be required at all low points in the main lines. See plans, notes, and details.
   3. The location of each manual drain shall be shown on the "as built" drawing with dimensions from the nearest permanent fixture, such as a building corner, etc.
   4. Each manual drain valve will be accessed by a vertical two (2) inch PVC Schedule 40 pipe sleeve, capped by a locking valve cap with a key, enclosed within a ten (10) inch round green valve box with bolt down lid. The top of the drain sleeve shall be three to six (3 - 6) inches below the lid of the valve box.
   5. Each manual drain shall empty into a gravel sump, a minimum of twenty-four (24) inches by twenty-four (24) inches by eighteen (18) inches deep, (or six (6) cubic feet total capacity). The gravel shall be washed three quarter (3/4) inch rock.

G. Automatic Drain Valves: Automatic drain valves shall not be used.

2.5 VALVE BOXES

A. All valve boxes shall be green HDPE plastic with locking lid or approved equal.
B. Valve box size shall be listed in the installation details for each irrigation system component.
C. 4”x4” Treated wood frame shall be used to support valve boxes.

2.6 BACKFLOW PREVENTION ASSEMBLY

A. Backflow prevention devices shall be a reduced pressure principle backflow preventer consisting of a pressure differential relief valve located between two

independently operated spring-loaded "Y" type center guided check valves. Assembly shall also have two full port resilient seated ball valves for shut-off and four resilient seated ball valve test cocks and bronze body construction. Larger sizes (2 ½" and up) may have two non-rising stem resilient wedge gate valves in lieu of ball valves.

B. Backflow preventer shall be as specified in the Irrigation Equipment Schedule.

2.7 SWING-LINE PHYSICAL DISCONNECT ASSEMBLY (WHERE ALLOWED)

A. Where culinary and secondary water may be used interchangeably for irrigation purposes, a physical disconnect mechanism is required. A swing-line setup is preferred by the City and must meet the following design requirements:
   1. Only one water supply source can be used at any given time.
   2. Two (2) supply lines enter a swing-line box, one from secondary water source and one from culinary water source.
   3. Each supply line must have a shut off valve immediately upstream from the swing-line.
   4. One sprinkler feed line exits the swing-line box.
   5. A flexible line is permanently fastened to the sprinkler feed line and a quick disconnector is attached to the end of each supply line.
   6. The supply line that is not connected to the swing-line must have a secure plug when not in use. Tape is not acceptable.

B. The swing-line shall be made of 200 psi red water hose, size as required.

C. The quick disconnectors shall be plastic camlock style.

D. The swing-line assembly shall be placed in a large polycrete Carson vault. Vault shall be large enough to accommodate clearance around all valves and camlock fittings and swing of hose from one supply to the other.

2.8 FILTER AND ENCLOSURE

A. Filters and their enclosures shall be required on all systems using secondary water. Systems using reclaimed water (from a wastewater treatment plant) may not require a filter.

B. Filters shall be as specified in the Irrigation Equipment Schedule. Filters may be either plastic or steel construction, with screen (perforated or weave wire stainless steel) or plastic disc filter elements.

C. Filter enclosures shall be either commercially or custom fabricated. They shall be constructed of solid sheet marine grade aluminum, with one hundred (100)

percent stainless steel hardware, and locking mechanism. They shall exhibit vandal- and weather-resistance and offer easy access.

D. Enclosures shall be mounted on either a pre-manufactured mounting pad with support base or minimum four (4) inch thick concrete pads. See detail.

2.9 AUTOMATIC CONTROL SYSTEM

A. Furnish a low voltage automatic control system manufactured expressly for the operation of automatic control valves used in an underground irrigation system.

B. Automatic controller devices shall be as specified in the Irrigation Equipment Schedule. No substitutions shall be allowed. Unless specified otherwise, install as follows:
   1. Install in stainless steel enclosure, model as specified in the Irrigation Equipment Schedule.
   2. Whenever a single site has 2 or more controllers, the 2nd and subsequent controllers shall also be mounted in a separate stainless-steel enclosure as specified in the Irrigation Equipment Schedule.
   3. Metered enclosures, if required, shall be mounted on a 4" thick concrete pad. Regular enclosures may use a pre-manufactured mounting system as specified in the Irrigation Equipment Schedule.

C. Provide adequate capacity to accommodate each valve on the system separately. Do not connect two or more valves to the same single circuit.

D. The Contractor shall provide 120-volt electrical service to the controller. Where required, install meter inside meter socket of the enclosure. Coordinate this work with the Owner and other trades involved in the project.

E. Every controller shall be installed to control a single point of connection (P.O.C.) exclusively associated with that controller. Each P.O.C. assembly shall consist of the main line tap, reverse pressure backflow prevention device (if potable water source), filter (if required), master control valve (if specified), flow sensing device (if specified), manual drain valve, and quick coupling valve. No controller shall be wired to control valves which are connected to another P.O.C.

2.10 TRADITIONAL CONTROL VALVE WIRE

A. All irrigation control wire shall bear approval as U.L. listed type of underground feeder (direct burial) and each conductor shall be of electrical conductivity grade solid copper in accordance with ASTM 30.

B. No aluminum wire shall be used on this project.

C. Wire size shall be #14-gauge minimum.
D. Two spare wires shall be run from each controller to the farthest valve under its control in all directions and any valve which is on a dead-end line. This requirement does not apply to a 2-wire system.
E. All wire crossing water, attached to bridges, going under paving, or where conditions require protection, shall be housed in conduit or sleeves. All out-of-ground conduits shall be rigid metal. All buried conduit may be PVC.
F. All splices shall be watertight. All connections made inside the box to connect wires to the valve shall be made using a 3M DBR/Y dry-splice connector or pre-approved equal. Each connector shall be completely sealed and waterproofed.
G. All other splices in control wire shall be housed in a separate valve box.
H. The pigment or color of the wires shall be integrated into the covering, rather than painted on. All common or ground wires shall be white in color. Control or hot wires shall be red. Where more than one controller is required, a different colored hot wire shall be used for each controller. A separate color shall be used for all spare wires.

2.11 TWO-WIRE CONTROL VALVE WIRE

A. All irrigation control wire from the controller to the decoders must be Polyethylene double-jacketed or UF-B UL PVC double-jacketed two-conductor solid core designed for direct burial systems.
B. All controller wire shall be soft drawn, annealed, solid copper conforming to ASTM B33. Conductor insulation must be 4/64-inch thick PVC, conforming to UL Standard #493 for thermoplastic-insulated style UF (Underground Feeder), rated at 60 degrees C.
C. The two insulated conductors are laid in parallel and encased in a single outer jacket of 3/64-inch thick, high density, sunlight resistant polyethylene conforming to ICEA S-61-402 and NEMA WC5, having a minimum wall thickness of 0.045-inch.
D. The two conductors must be color-coded: normally one conductor red and one black. Both conductors shall be the same size: 14 AWG.
E. All wire crossing water, attached to bridges, going under paving, or where conditions require protection, shall be housed in conduit or sleeves. All out-of-ground conduits shall be rigid metal. All buried conduit may be PVC.
F. All splices shall be watertight. All connections made inside the box to connect the controller to the valve shall be made using a dry-splice connector DBR/Y. Each connector shall be completely sealed and waterproof.

G. All other wire splices shall be housed in a separate round valve box and use DBR/Y connectors.
H. Lightning arrestors and eight (8) foot long by 5/8-inch diameter copper ground rods shall be used as recommended by the manufacturer and be installed per manufacturer recommendations and installation details of this project. Attach bare copper wire to ground rods using Cadweld™ type connection and install in eight (8) inch round valve box.
I. No aluminum wire shall be used on this project.

2.12 SPRINKLER HEADS

A. General:
   1. All sprinkler heads and nozzles used on this project shall be as specified in the Irrigation Equipment Schedule shown on the plans.
B. Spray/Rotary Sprinklers:
   1. Spray/Rotary sprinklers shall have either six (6) or twelve (12) inch pop-up height and built-in check valve. In areas where water pressures are high or fluctuating, pressure regulating series sprinklers shall be used.
   2. Spray/Rotary sprinkler nozzles shall be plastic matching precipitation rate nozzles. Variable arc nozzles may be used to meet irregular-shaped areas.
   3. Attachment options shall be as specified in the installation details.
C. Rotor Sprinklers:
   1. Rotor sprinklers shall be equipped with stainless steel rotor sleeve and check valve.
   2. Rotor sprinkler nozzles shall be as manufactured for each individual model.
   3. Small rotor sprinklers (½" bottom inlet) may be installed using swing pipe per installation details. Medium (3/4" bottom inlet) and large (1" or greater bottom inlet) rotor sprinklers shall be installed using swing joints as shown in the installation details. Swing joint size shall match sprinkler inlet size.
D. Bubblers, Tree Well, and Root Watering Systems: Installed per manufacturer's recommendations. Use only where and when specified.

2.13 DRIP IRRIGATION

A. Drip irrigation materials shall be as specified in the Irrigation Equipment Schedule.
B. Emitters shall be of the individual, self-cleaning, pressure-compensating type.
C. Dripline tubing shall be constructed of high quality linear, low density, UV-resistant, polyethylene resin materials with internal, integral emitters at specified intervals.

D. All insert barbed fittings shall be constructed of molded, UV-resistant plastic. Each fitting shall have a minimum of two (2) ridges or barbs per outlet. All fittings shall be from the same manufacturer and shall be available in one of the following end configurations:
   1. Barbed insert fittings.
   2. Male pipe threads (MPT) with barbed insert fittings
   3. Female pipe threads (FPT) with barbed insert fittings.

E. Each drip remote control valve assembly shall contain the following components (in required sequence):
   1. PVC ball valve.
   2. Inline disc or screen filter with 100 micron/150 mesh filter element.
   3. Remote control valve.
   4. Inline pressure regulator.

F. Provide the following equipment to each drip valve circuit, located and installed per manufacturer's recommendations:
   1. Line flushing valve(s) - minimum of one (1) on each exhaust header, and one (1) on each supply header.
   2. Air/Vacuum relief valve(s) at all high points in the system if required by the manufacturer.

2.14 FLOW SENSING EQUIPMENT

A. Where specified, each controller shall be installed with its own corresponding flow sensor on a single point of connection to the water source.
B. The flow sensor shall be compatible with the specified controller.
C. Size the flow sensor so that it is able to read the high and low flows of the valves used on that particular controller. Install per manufacturer's specifications.

PART 3 EXECUTION

3.1 GENERAL

A. The irrigation plan is diagrammatic in nature, and some drafting liberties have been taken to maintain the graphic clarity of the drawings. All irrigation equipment shall be located in planting areas only, unless noted otherwise. The Contractor shall install piping to minimize changes in direction, avoid placement under trees or large shrubs, and avoid placement under hardscape features. Refer to the irrigation legend, details, notes and specifications for equipment and proper installation.

B. Site Visit: The Contractor shall visit and inspect the project site. He shall take into consideration known and reasonably inferable conditions affecting the proposed work. Failure to visit the site shall not relieve the Contractor of furnishing materials and performing the work required. Any discrepancies between existing site conditions and those indicated on the plans shall be called to the attention of the Owner, by the Contractor, prior to continuance of the project.

C. The Contractor shall keep the premises clean and free of excess equipment, materials, and rubbish incidental to work of this project. Work areas shall be swept clean and trash and debris picked up daily. Open trenches or hazards shall be protected with yellow caution tape. The Contractor is responsible for removal and legal disposal (off site) of trash and debris generated by his work on this project.

D. Existing Landscapes:
   1. Where existing landscape areas are a part of the project, the Contractor shall repair or replace work damaged by his irrigation system installation at his own expense. If the damaged work is new, the Contractor or the original installer of that work shall perform repairs at the Contractor's expense. The existing irrigation system and landscape shall remain in place, protected, undisturbed, and functional.
   2. The Contractor shall protect in place and work around all existing plant materials designated to remain.
   3. Coordination of trench and valve locations shall be laid out prior to any excavation work. Plant material deemed by the Parks Department to be damaged by the Contractor shall be replaced with new plant material at the Contractor's expense. The Contractor shall not cut existing tree roots larger than two (2) inches in diameter. Route pipe, wire, and irrigation components around tree canopy drip lines where possible to minimize damage to tree roots.
   4. The Contractor shall avoid trenching within the dripline of all existing trees. This will protect the root zone and avoid "slicing off" of major roots that support the tree. If trenching must be done within the dripline, the trench should be made in a radial direction approaching the tree trunk and extending only as far as necessary to place the irrigation equipment. The Contractor shall consult with the Owner and the Landscape architect prior to trenching in this area to discuss trenching options and receive approval before digging.
   5. The Contractor shall leave no part of the existing landscape without water for more than forty-eight (48) hours at a time.

E. Pre-Construction Meeting: A pre-construction meeting shall be held prior to beginning any work on a project. The Parks Department, the project designer, and the Contractor and his Sub Contractors shall all be in attendance.
   1. The purpose of this meeting is to review project goals and expectations, the project schedule, and all procedures relative to inspections, permits, and changes that may arise.
   2. During the pre-construction meeting, it shall be made clear that the construction documents (plans, details, specifications, and contract) shall be binding upon the Contractor and upon all of his work. Any work not in accordance with the plans and specifications shall be rejected, and the Contractor shall bring the project into compliance at his own expense.

3.2 CONSTRUCTION STAKING

A. The Contractor shall provide the necessary staking to obtain the layout shown on the plans. The points of reference shall be as indicated in the drawings and shall include such features as the walks, buildings, curbs, etc. Any changes to the irrigation system which appear necessary due to field conditions must be called to the attention of the Parks Department and approved by them at the time they are discovered and prior to making any changes.

3.3 EXCAVATION AND BACKFILLING

A. Excavation:
   1. Excavation work shall only be as deep and as wide as will be required to safely perform the work, such as making mainline connections or forming vaults.
   2. Trenches shall be deep and wide enough to provide working space for placing two (2) inches of bedding underneath all new mainline pipe and fittings where the soil is rocky or gravelly. Place eighteen (18) to twenty-four (24) inches of cover over the top of all pipe and fittings on main lines. All trench bottoms shall be sloped so the pipes will gravity-drain back to the main connection point or the nearest manual drain. If the existing main line is deeper than twenty-four (24) inches, the Contractor shall install a riser to a depth of eighteen (18) to twenty-four (24) inches and then install the new line at the required depth. At no time will the mainline be installed with less than eighteen (18) inches or greater than twenty-four (24) inches of cover unless prior approval is given by the Parks Department.
   3. Trenches shall be deep enough to maintain eight (8) to twelve (12) inches of cover over the top of all lateral line pipe and fittings. They shall be deep

enough to guarantee that all swing joints drain back to the lateral lines. Trenches shall be a minimum of twelve (12) inches away from any walks and/or curbs, buildings, or other hardscape improvements. They shall be of sufficient width to accommodate tees and other fittings that come out sideways (horizontally) from the lateral lines. Lateral lines may be pulled by a mechanical puller provided all other applicable specifications are met.

4. Any rocks or other debris over one (1) inch in diameter uncovered during excavation or trenching shall be removed from the area.
5. If more than one (1) pipe line is required in a single trench, that trench shall be deep and wide enough to allow for at least six (6) inches of horizontal separation (if both are lateral lines), or six (6) inches of both horizontal and vertical separation (if one line is a main line) between pipes.
6. Any existing utility lines damaged during excavating or trenching shall be reported immediately to the Landscape Architect, the utility Owner, and the project Owner. After proper notification to the Landscape Architect, the utility Owner, and project Owner, repairs to the damaged utility shall be made immediately. Repair materials and methods shall meet industry standards and the utility Owner's satisfaction. Should utility lines be encountered which are not indicated on the plans, the Owner shall be notified. The repair of any damage shall be done as soon as possible by the Contractor or the utility Owner, and proper compensation to the Contractor shall be negotiated with the Owner. Such utility locations shall subsequently be noted on the "As-Built" drawings required before final payment of the irrigation system contract.
7. Where trenching is done in established lawn, care shall be taken to keep the trenches only as wide as is necessary to accomplish the work. The trenches shall be backfilled as specified and then four (4) inches of approved topsoil placed to bring the trench up to existing grade so that sod can be laid. Only new sod shall be used as trench cover. It shall be established new sod, of standard width, and shall be laid along the trenches so as to match the existing sod. No small pieces of sod shall be used, and only standard lengths shall be accepted. No sod from the construction site shall be used unless otherwise specified. In the event of any backfill settlement prior to the end of the guarantee period, the Contractor shall perform the required repairs at his own expense.

B. Backfilling:
   1. No backfilling of trenches shall be done until the system has been inspected and approved by the Parks Department for proper trench depths, installation of equipment, control wire, and location of heads.

2. Before trenches are backfilled, the Contractor must show the Parks Department the redlined "As-Built" drawing he has been keeping on the site, indicating that changes and corresponding dimensions have been recorded where such changes have been made.
3. Prior to backfilling, the system shall be tested under pressure for leaks and general operation of the equipment. The main line shall be tested for a period of four (4) hours at a pressure of 120 PSI. Any failures detected during the testing period shall be repaired by the Contractor and the testing shall be repeated. The Parks Department shall certify the testing to ensure that it has been completed and that the system has met all testing requirements. All defects discovered by the pressurization and operation test shall be corrected by the Contractor at his own expense before proceeding with further work.
4. Trench bedding and backfill material shall be existing site soil free of rocks larger than one (1) inch in diameter and any other debris. Wasted pipe and other excess project materials or rubbish (tape, wire, trash, wrappers, boxes, bottles, etc.) shall not be backfilled into the trenches. All trenches shall be backfilled, and then watered sufficiently to ensure no future settling of the surface. In the event of any backfill settlement prior to the end of the guarantee period, the Contractor shall perform all required repairs at his own expense.
5. Backfill under and around the lines to the center line of the pipe shall be placed in maximum layers of six (6) inches and thoroughly compacted. Compaction shall be ninety-five (95) percent relative density (modified proctor) under walks and roads, and eighty-five (85) percent in planting areas.
6. Special care shall be taken to ensure complete compaction under the haunches of the pipe. Backfill compaction under the haunches of the pipe shall be compacted to the original density. Compaction requirements above the pipe shall be the same as for surrounding areas.

3.4 POINT-OF-CONNECTION

A. Each new irrigation point-of-connection shall have feeds from both the pressurized irrigation system and culinary water run to the same location, giving the City the option to use either source as needed. The connection must be configured in a way that a potential cross-connection between potable and non-potable water cannot occur. There must be physical air gap between the two sources such that only one or the other can be used at any given time. The

use of a reduced pressure backflow prevention device on the culinary water side us mandatory.

B. The Contractor shall verify the location of the irrigation point-of-connection (P.O.C.) and the static water pressure at that location prior to beginning any irrigation work. Verify water pressure during the time of day that the irrigation system is intended to operate.

C. If the P.O.C. location or water pressure is different than that expressed by the irrigation designer, or if the pressure appears to be unusually high or low, the Contractor shall notify the Parks Department immediately prior to beginning any irrigation work.

3.5 ELECTRICAL POWER SUPPLY AND AUTOMATIC CONTROLLER

A. If 120-volt ac electrical service is not already in place, the Contractor shall be required to make all necessary arrangements with the appropriate power company and provide all necessary materials and labor to provide said power, including but not limited to: paying fees, making power connections, providing poles, weatherhead and meter, etc., as specified on the plans or as required by the power company and the Owner. The exact location of the automatic controller which shall receive the power shall be determined by the irrigation designer and the Owner.

3.6 PIPE AND FITTINGS

A. Install pipe to allow for expansion and contraction as recommended by pipe manufacturer. Where the main line sits uncovered for any length of time in the trench prior to testing, the main line shall be shaded with a thin covering of backfill soil to minimize weather-related expansion or contraction of the pipe. Do not cover up valves or other installed equipment prior to inspection and acceptance.

B. The ends of all pipe shall be cut squarely and remain free of all inside scale or burrs. Spigot ends of pipes three (3) inches and larger shall be beveled. Threads shall be cut clean and sharp, and to a length equal to one and one eighth (1-1/8) times the length of the female thread receiving the pipe. The threaded pipe shall be screwed into a full length of the female thread.

C. All threaded pipe joints shall be properly sealed using Teflon tape that is properly applied to the areas to be joined.

D. Solvent weld joints shall not be glued unless ambient temperatures are at least forty (40) degrees F. Pipe shall not be glued in rainy conditions unless properly tented. Use only the brand and type of primer and glue specified. Glued main

line pipe shall cure a minimum of four (4) hours prior to being energized. Lateral lines shall cure a minimum of two (2) hours prior to being energized and shall not remain under constant pressure unless cured for twenty-four (24) hours.

E. Every care shall be taken during installation to prevent dirt and debris (especially rocks and pipe shavings) from getting into the pipes.
F. All tees coming out of main lines for valves and other fixtures shall be horizontal and constructed with Sch. 80 PVC pipe unless otherwise noted.
G. All tees coming out of the lateral lines for heads and other fixtures shall be horizontal so that no direct weight or pressure may be exerted through the head to the top or bottom of the lateral line pipe. Tees on lateral lines shall also be SxSxT to the head swing joints.

3.7 THRUST BLOCKS

A. Thrust blocks are needed wherever the main pipeline:
   1. Changes any direction at tees, angles, and crosses vertical and horizontal.
   2. Changes size at reducers.
   3. Stops at a dead-end.
   4. Valves at which thrust develops when closed.
      The size and type of thrust block depends on pressure, pipe size, type of soil, and type of fitting. As a general rule, one cubic foot (minimum) of class AA (AE) Type II concrete (2,000 psi minimum) is required for each thrust block. Follow thrust blocking details for calculating thrust block size.
B. Thrust blocks shall rest against undisturbed original earth in the direction of thrust.
C. Where a fitting is used to make a vertical bend, use a three-eighths (3/8) inch rebar to anchor the fitting to a thrust block braced against undisturbed soil. The thrust block should have enough resistance to withstand upward and outward thrusts at the fitting.
D. Where concrete thrust blocking shall come in contact with PVC pipe, wrap the PVC pipe with a layer of plastic to protect the pipe from any caustic effects that may be caused by the concrete mix.
E. Thrust restraining devices may be used in lieu of thrust blocking, but they must be installed strictly according to manufacturer's recommendations. Use of these devices in lieu of thrust blocking shall be approved by the Parks Department prior to use.

3.8 PIPE SLEEVES

A. Pipe sleeves shall be required for all piping under all new concrete or other new paving. The size of the sleeve shall be at least twice the size of the pipe or wires to be sleeved. Wires shall be sleeved separately within their own sleeve. All pipe sleeves four (4) inches and smaller in diameter shall be PVC Schedule 40 pipe; sleeves greater than four (4) inches in diameter shall be Class 200 PVC, unless otherwise specified on the drawings.

3.9 VALVES

A. General:
   1. Isolation valves, remote control valves, and quick coupling valves shall be installed according to manufacturer's recommendations and these drawings and specifications.
   2. Valve boxes shall be set over valves so that all parts of the respective valve assembly can be reached for service. Valve box and lid shall be set to be flush with the proposed finished grade.
   3. No valve box shall rest directly upon the valve or any fixture associated with it, including main line and lateral lines. Valve box shall rest upon treated 4x4 wood block frame. Each valve box shall be centered on the valve assembly it covers. Each valve box shall have four (4) inches of three quarter (3/4) inch gravel placed in the bottom underneath the valve and lines to reduce the potential of mud and standing water therein.

B. Remote Control Valve:
   1. Each control valve shall have its own gate or ball valve (as specified), and only one (1) control valve and gate/ball valve per valve box. No valve manifolds shall be allowed.
   2. The bottom of the remote-control valve shall be a minimum of four (4) inches above the gravel.
   3. All control valves shall be located within shrub areas where possible and installed per the details on the plans. No large grouping of valves (greater than 3) in any one spot shall be allowed, unless approved by the Parks Department.
   4. Control valve assemblies shall be installed no closer to one another then two (2) feet.
   5. No control valve shall be installed more than twelve (12) inches below finished grade.
   6. Tag each control valve with a permanent and non-smearing label indicating its proper controller and valve number as shown on the irrigation plans.

C. Quick Coupling Valve:
   1. Quick coupling valves shall be installed within a ten (10) inch round green plastic valve box, with the top of the valve box at finished grade.

3.10 VALVE BOX

A. Where indicated in the installation details, valve boxes shall rest on four by four (4 x 4) inch pressure-treated wood blocks only. Form a base around the valve box upon which it can rest, thus eliminating any weight or pressure from being exerted on the main line or valve inside the valve box. There shall be a minimum of three (3) inches of clear space between the bottom of the valve box lid and the topmost part of the valve (including solenoid).
B. Valve box extensions shall be used where necessary to prevent soil around the valve from collapsing into the space inside the valve box.

3.11 BACKFLOW PREVENTION ASSEMBLY

A. The Contractor shall install backflow prevention equipment behind (downstream from) the point-of-connection to the supplying main and lateral lines. Installation shall comply with local, state, and national codes and regulations, and per manufacturer's recommendations (whichever is most restrictive). See plans and details for more information. Install a quick coupling valve just downstream from the backflow prevention assembly for system blowout purposes.
B. The Contractor shall have the backflow prevention assemblies operationally tested within ten (10) days of the time of installation by a certified backflow preventer assembly tester. Testing shall be conducted per state requirements to insure proper and safe operation. Subsequent annual testing at spring start-up shall be the responsibility of the Owner.

3.12 SWING-LINE PHYSICAL DISCONNECT ASSEMBLY (WHERE ALLOWED)

A. Install swing-line disconnect assembly as shown in the City's detail.
B. Ensure that only one supply line can be operated at any given time.
C. Unused supply shall be plugged with appropriate camlock plug (not dust cover).
D. Culinary water supply line must have a reduced pressure backflow prevention device installed upstream from swing-line.
E. Shut off valves of the type specified in detail must be on each supply line. Shut off valve is not required on irrigation feed line.

F. City must approve vault prior to installation.

3.13 FILTER & ENCLOSURE

A. The Contractor shall install the filter and its enclosure just downstream from the point-of-connection and upstream from the backflow prevention assembly (if present).
B. The filter shall be equipped with a ten (10) foot length of hose that can be attached to the exhaust port of the filter to direct water and debris away from the enclosure during flushing operations. Auto-flush filter models shall be provided with a permanent method of capturing and directing exhaust water away from the filter assembly without creating puddles, ponding, or any other nuisance drainage problems.

3.14 WIRE & CABLES

A. All wires and cables shall be installed in electrical conduit and placed in the trench near the main line. Where wires pass under paved areas, they shall be installed in Schedule 40 PVC sleeves, separate from lateral or main lines. These sleeves shall be installed prior to installation of the paving, if possible, and prior to installation of the wires. See detail for sleeve sizing.
B. Control wires not placed in the trenches adjacent to the pipes shall be placed in PVC electrical conduit and buried eighteen (18) inches or deeper and marked on the "as built" drawings.
C. Two (2) spare wires shall be run from each controller to the farthest valve under its control in all directions and to any valve which is on a dead-end line. The spare wires shall be a different color from the regular wires and shall be labeled at both ends. Each spare wire shall be brought up to the surface in each valve box it passes through and coiled with twenty-four (24) inches for use in future connections. Each spare wire shall be tested for continuity prior to final acceptance of the project and guaranteed by the Contractor to be functional. Should the maintenance personnel discover a defect within one (1) year afterwards, the Contractor shall locate the problem and cause it to be repaired at his own expense. Install extra wires as needed for moisture sensors (if used). This requirement does not apply to 2-wire systems.
D. Run a single 14-gauge wire along the top of the main line to be used for tracking the location of the main line. The color of the tracing wire shall be different than any other wire color used.
E. All wires shall be installed with twenty-four (24) inches of excess wire (coiled) at the end of each wire run, wire splice, and at each controller.

F. Isolation valves, quick coupling valves, manual drain valves, and wire splices not specifically associated with the control valve shall be located in separate valve boxes.

3.15 SPRINKLERS

A. General:
   1. All sprinkler heads shall be installed above grade so as to minimize washing of the topsoil and seed during the landscaping establishment period, except those which border paving or flat work of any kind. These heads shall be installed at the finished grade of the adjacent paving or flat work. Locate sprinkler heads three (3) inches away from concrete sidewalk or curb and gutter to accommodate edging between the head and the paved surface. Prior to final acceptance of the project, all heads shall be raised or lowered to final lawn or planting grade.
   2. All sprinkler heads shall be installed using the bottom inlet. No side outlets shall be used. Tape or plug all open ends while installing to prevent debris contamination.
   3. Rotor heads located on hillsides shall be adjusted to lean towards the downhill side to avoid cutting into the hill by the stream of water and thus causing erosion.
   4. Heads installed in existing sod shall be set at the grade of the soil.
   5. All rotor pop-up heads shall be installed at final grade using swing joints (see details for additional information). All swing joints must drain by gravity back to the supply lines.
   6. All pop-up shrub spray/rotary, turf spray/rotary, bubbler and strip spray/rotary heads shall be installed as shown in the details.
   7. All pipes, lines, and risers shall be flushed thoroughly with water before installation of any heads. All debris and rocks found at that time shall be removed from the area as soon as possible.
   8. All spray, rotary and rotor sprinklers shall be flushed thoroughly with clean water a second time before installation of nozzles.
   9. The Contractor shall adjust all heads to provide a uniform coverage and to keep spray off buildings, walkways, walls, parking areas, and drives.
   10. Check valves shall be used where indicated and where necessary to prevent water flow from lower elevation heads when system is turned off. Install per manufacturer's recommendations.

B. Drip Irrigation
   1. Point Source Drip System

a. Place two (2) drip emitters on opposing sides of each shrub, perennial, and ornamental grass. Place four (4) drip emitters equally spaced around trees. Emitters shall be staked near the edge of the newly planted root ball and inside the watering well.

2. Inline Drip System
   a. Inline drip tubing shall be spaced approximately equal to the inline emitter spacing unless noted otherwise on the plans. Inline drip tubing spacing may be adjusted to be slightly less than the emitter spacing in order to achieve uniform spacing. For slope applications, place drip tubing laterals parallel to the slope contour. When slopes exceed thirty (30) percent, increase the recommended lateral spacing by twenty-five (25) percent on the lower one third (1/3) of the slope.
   b. Inline dripper tubing shall be installed at finished grade with soil staples and covered with three (3) inches of specified mulch. Supply and exhaust headers shall be installed at normal lateral line depths.
   c. If weed barrier fabric is used, bring the inline dripper tubing to the surface and place on top of the fabric. Staple in place. Supply and exhaust headers shall be installed at normal lateral line depths.
   d. All drip tubing shall be held in place by soil staples and shall conform to the following:
      i. Sandy Soil - One staple per every three (3) feet and two (2) staples on each change of direction (tee, elbow, or cross).
      ii. Loam Soil - One staple every four (4) feet and two (2) staples on each change of direction (tee, elbow, or cross).
      iii. Clay Soil - One staple every five (5) feet and two (2) staples on each change of direction (tee, elbow, or cross).
   e. Installation of inline drip circuits shall generally conform to the following steps:
      i. Assemble and install ball valve, filter, remote control valve and pressure regulating valve assembly in accordance with installation details.
      ii. Assemble and install supply header(s) in accordance with installation details. Tape or plug all open connections to prevent debris contamination.
      iii. Install lateral drip lines in accordance with details and relevant specifications and manufacturer's recommendations. Tape or plug all open ends while installing to prevent debris contamination.

iv. Assemble and install exhaust header(s) in accordance with installation details. Tape or plug all open connections to prevent debris contamination.
v. Install air/vacuum relief valve(s) at the zone's highest point(s) in accordance with installation details.
vi. Thoroughly flush supply header(s) and connect drip lateral lines while flushing.
vii. Thoroughly flush drip lateral lines and connect to exhaust header(s) and any interconnecting lateral lines while flushing.
viii. Thoroughly flush exhaust header(s) and install line flushing valves in accordance with details.

3.16 RECORD DRAWINGS

A. The Contractor shall keep a current and accurate record of exact dimensioned locations, grades, elevations, and size of all exterior and interior underground piping, valves, and drains. Dimensions shall indicate distances from columns, buildings, curbs, and similar permanent features on the site. This information shall be recorded on a print as the work progresses but shall be permanently recorded in digital format. This shall be given to the Owner before the project is accepted.
B. Final payment for the contract will not be processed until "Record Drawings" are received by the Owner.

3.17 OPERATIONAL TEST AND MAJOR INSPECTIONS

A. GIS Location and Inspection
   1. Prior to backfilling, the contractor shall schedule an inspection with the Parks Department to inspect equipment and piping.
   2. Contractor shall also schedule a time for the Herriman City GIS department to survey the location of the irrigation system piping and equipment.
B. Substantial Completion:
   1. At substantial completion of the irrigation system, the Contractor shall call for an operational and coverage test. Substantial completion shall be defined as the complete installation of all irrigation equipment and completion of all backfilling and grading operations in their entirety. Substantial completion shall not be given for designated portions of the project.

2. Notice by the Contractor shall be given, in writing, at least seven (7) days in advance to the Owner so that proper scheduling can be made for those who are to attend.
3. At the appointed time, an inspection of all irrigation equipment, including control valve assemblies, controllers, isolation valves, quick coupling valves, drain valves, and sprinklers shall be made. The entire system will be tested for operation, coverage, and head adjustment. Please note that the pressure testing of the main lines shall already have been completed prior to this time.
4. A list of uncompleted items or repairs (punch list) shall be generated by the Owner and distributed to the Contractor and other involved parties within three (3) days of the operational testing. Each item on the punch list shall be corrected before the system will be approved and accepted by the Owner. The Contractor will be back charged for time spent by the Owner and any consultants who have been brought to the site for a final inspection when the project is not ready for said inspection.

C. Maintenance/Establishment Period:
1. The duration of the irrigation maintenance period shall be equal to the plant maintenance/establishment period unless specified otherwise in the plans or specifications. It shall begin one (1) day after the substantial completion inspection. The Contractor shall complete all punch list items during the maintenance period, as well as maintain and operate the entire irrigation system.
2. The irrigation Contractor (if different than the landscaping Contractor) shall coordinate with the landscaping Contractor during the entire plant and lawn establishment period on the use, scheduling, and maintenance of the sprinkler system.
3. The maintenance period shall not end until Final Acceptance of the project has been completed.

D. Final Acceptance:
1. An inspection shall be held at the end of the maintenance period to ensure that all punch list items have been completed and the entire system is ready for acceptance by the Owner.
2. Upon satisfaction that the Contractor has completed all punch list items, the irrigation system is fully and completely functional, and the required As-Built drawings (digital format only) and maintenance manuals have been submitted, the Owner shall accept the project.
3. An official letter of final acceptance shall be prepared and issued by the Owner to the Contractor and Landscape Architect. Upon acceptance of the

system by the Owner, the Owner shall assume full responsibility for the system, and the warranty or guarantee period shall begin.

3.18 WARRANTY AND MAINTENANCE

A. Warranty:
   1. Upon final acceptance of the irrigation system as being operational and properly installed, the Contractor shall warranty the workmanship, materials, fixtures, and equipment to be free from defects for a period of one (1) year after that date.
   2. In working with or connecting to an existing system, the Contractor shall warranty compatibility in operation and drainage between the two systems.

B. Maintenance Required During Warranty Period:
   1. In the fall of the year during the installation and warranty period, the CONTRACTOR shall meet with the Owner's maintenance personnel on the site. The Contractor shall winterize the system by draining all of the water and doing everything necessary to ensure protection of the system until spring. Blowing out the lines by compressor shall be permitted during the one (1) year guarantee. Maximum compressor pressure shall be 30 psi on spray circuits, 50 psi on rotor circuits, and 20 psi on all drip circuits. The individuals involved from both parties shall exchange all information necessary for the eventual take-over of the system by the Owner.
   2. The Contractor, with the Owner's maintenance personnel and Owner in attendance, shall energize the sprinkler irrigation system again the following spring and shall repair all defects found as a result of winter damage, improper installation, improper maintenance, defective materials or inadequate sprinkler drainage.
   3. At the end of the warranty period, when the lawn and landscaping have been accepted, the Contractor shall call for a final inspection of the sprinkler irrigation system. There shall be at least seven (7) days prior notice given in writing to the Owner so the appropriate people have opportunity to attend.
   4. Prior to that time, the Owner shall adjust all heads to their proper pattern, radii, and height. The system shall have been flushed out, checked for operation, and any defects not covered by the warranty shall be repaired. The entire system shall be inspected and checked to determine if everything is in working order. A final list of warranty items found in need of correction (if any) shall be made and the Contractor shall correct them. The

Contractor shall notify the Owner when he has verified that every item is corrected.

5. After all warranty items have been corrected, the Owner shall, in writing, officially release the Contractor from all warranty claims pertaining to the irrigation system and assume full and complete responsibility for said system.

Replace these sections

32 91 13 Structural Soil Mix
32 91 19 Landscape Grading
32 92 00 Turf and Grass
32 93 13 Ground Cover
32 93 43 Tree
32 98 00 Vegetation Establishment Period

with the following:

SECTION 32 94 23
PLANTING

PART 1 GENERAL

1.1 SUMMARY

A. Section includes:
   1. Trees, shrubs, perennials, vines, and groundcover requirements.
   2. Bedding, topsoil, and temporary support.
B. The work to be performed under this section shall consist of furnishing all materials, labor, and plants necessary for the proper planting of all trees, shrubs, perennials, vines, and groundcovers of the kind and sizes specified at the prescribed locations, and otherwise in accordance with the drawings and specifications or as directed by the Parks Department.
C. Related sections:
   1. Section 32 84 23 Underground Irrigation Systems
   2. Trenching: Preparation for subsoil and placement of topsoil in preparation for the work of this section.
   3. Subgrade preparation

1.2 REFERENCES

A. AAN: American Associations of Nurserymen, Inc.
B. ANSI Z60.1-2014: American Standard for Nursery Stock.
C. FS O-F-241: Fertilizers, Mixed Commercial.
D. ICN: International Code of Nomenclature for algae, fungi and plants.
F. City Standards/Ordinances relating to Irrigation and Landscaping.
G. Jordan Valley Water Conservancy District Water Efficiency Standards

1.3 QUALITY ASSURANCE

A. Perform work in conformity with applicable requirements of AAN.
B. Upon receiving Notice to Proceed, the Contractor shall provide written proof that the specified plant material is available and has been secured or reserved specifically for this project. Obtain nursery stock and other plant materials from reliable and stable sources prior to order and delivery.
C. Provide plants that are declared free of disease and insect pests.

1.4 PRODUCT DELIVERY, STORAGE, AND HANDLING

A. Exercise care in digging, transporting, handling, and packing of all plants.
B. Handle plants so roots are protected at all times. If delivery is in open vehicles, cover entire load without causing overheating.
C. Deliver plant material immediately prior to placement. Keep plant material moist.
D. Protect root balls from sun and wind by covering with soil or other suitable material if not planted immediately upon delivery.
E. Store fertilizer in a weatherproof location such that its effectiveness will not be impaired.

1.5 ACCEPTANCE

A. Plants shall not be accepted if the ball of earth surrounding roots (rootball) has been cracked or broken.
B. Plants shall be accepted if burlap, staves, and ropes required in connection with transplanting are installed and still intact upon delivery.
C. Heeled in stock from cold storage shall not be accepted.

1.6 SAMPLES

A. The Contractor shall submit the following material samples (including sources and composition descriptions) to the Parks Department for inspection and approval prior to the beginning of work under this contract:
    1. Topsoil
    2. Mulch
    3. Fertilizer(s)
    4. Herbicide(s)
    5. Seed Mix(es)
    6. Tree ties and stakes

B. Delivery of materials may begin only after samples have been approved. All materials furnished for the work shall conform in every respect to the approved samples. Any non-conforming materials will be rejected.

PART 2 PRODUCTS

2.1 GENERAL

A. The planting plan is diagrammatic, and all plant locations are approximate. Plant symbols take precedence over plant quantities shown on the plans and in the plant material schedule. The Contractor shall verify all plant quantities and notify the Parks Department of any discrepancies between the quantities and the symbols shown.
B. Provide plants of normal growth and uniform height, according to species, with straight canes and well-developed leaders, roots, and tops.
C. Provide plants of sizes indicated. The size stated in each case shall be interpreted to mean dimensions of plant as it stands in its mature position in the nursery without straightening of any branches or leaders.
D. Provide legible labels attached to all plants, specimens, bundles, boxes, bales, or other containers indicating botanical genus, species, and size of each.
E. Plants cut back from larger sizes to meet specifications shall be rejected.
F. Balled and burlapped deciduous shrubs may be acceptable in lieu of container grown deciduous shrubs only if there is a demonstrated significant shortage of container grown stock.
G. Whenever any material is specified by name and/or number, such specifications shall be deemed to be used for the purpose of facilitation of a description of the materials and establishing quality. No substitution will be permitted unless approved by the Parks Department
H. In the event of any proposed changes in plant locations, type, or variety, the contractor shall clearly notify the Parks Department prior to the day the changes are made. The changes shall be approved by the signature of the Contractor and an authorized City Official on the proposed change application. It shall be the Contractor's responsibility to ensure the change is noted on all working plan sets.
I. No substitutions for the indicated plant materials will be permitted unless approved in advance by the Parks Department. Any substitutions shall be at least the same quality and size as to that specified on the plans. All substitute plant materials shall conform to the requirements of these specifications.

2.2 PLANTS

A. All plants shall comply with federal and state laws requiring inspection for plant disease and infestations.

B. Any inspection certificates required by law shall accompany each delivery of plants and said certificates shall be given to the Parks Department. All plants shall be subject to inspection and approval at the place of growth or upon delivery to the site for their quality, size, species, and variety. Such approval shall not impair the right of inspection and rejection at the site or during progress of work for size and condition of the plants, latent defects, or injuries. Any and all rejected plants shall be removed immediately from the premises by the Contractor. The Contractor shall make all replacements at his expense should he fail to comply in full with any of the specifications. Necessary replacements will be made as soon as weather conditions permit, and all such plants replaced shall conform to all specifications herein.

C. Names and Grades:

1. Plant names shall conform to the nomenclature of Standardized Plant Names Second Edition, International Code of Nomenclature for algae, fungi, and plants (ICN), 2011, or International Code of Nomenclature for Cultivated Plants, 2016 edition. When a name is not found in any of these references, consult the accepted name used in the nursery trade. All plants shall be tagged by the nursery with the proper identification labels to ensure the correct varieties of plants.
2. Size and grading standards shall conform to those of the American Association of Nurserymen, Inc., as published in American Standard for Nursery Stock, 2014 Edition, with all current revisions unless otherwise specified.
3. The caliper of trees shall be measured six (6) inches above the surface of the ground unless the trunk is more than four inches caliper. If so, measure trunk caliper twelve (12) inches above ground.
4. Measurements on all trees and shrubs shall be taken with the branches in a normal position. Height and spread dimensions specified refer to the main body of the plant and not from branch or root tip to tip. No trees which have had their leaders cut, or are so damaged that cutting is necessary, will be accepted.

D. No substitution of size, grade, variety or any species shall be permitted except by written permission from the Parks Department.

E. Plant Size:

1. All plants shall conform to the size, age, and condition as specified in the plant list shown on the drawings. Undersized plant material shall not be approved.
2. No additional compensation shall be due the Contractor if larger than specified plant material is provided.
3. Only balled and burlapped or container stock shall be accepted. No bare root stock shall be accepted.
4. Plants cut back from larger sizes to meet specifications shall be rejected.

F. Plant List:
1. Plant lists indicate minimum size requirements only. Plant materials shall be equal to or greater in size than those specified.
2. Any discrepancies between plant lists and plans shall be immediately brought to the attention of the Parks Department.
3. In all cases the Contractor shall be held responsible for all plant materials indicated on the plans unless otherwise directed in writing by the Parks Department.
4. Each bidder shall investigate sources of supply and satisfy himself that he can supply all of the plants mentioned in the planting lists in size, variety, and quantity noted and specified before submitting his bid. Failure to take this precaution will not relieve the successful bidder from his responsibility as Contractor to furnish and install all plant material in strict accordance with the contract requirements without additional expense to the owner.
5. If a shortage of the specified plant material truly exists and can be verified by the Contractor, the Contractor shall notify the Parks Department immediately and discuss what varieties and sizes are available as a suitable substitution. Last minute substitutions are not acceptable.
6. For a current tree list from which a Contractor may choose for planting in Herriman City projects, see Section 6, Details LP-13, LP-14, and LP-15.

G. All plants shall be fresh and vigorous, of normal habit and growth, and free of disease, insects and insect eggs and insect larvae, weeds and weed seed. No heeled-in plants from cold storage shall be accepted except on approval by the Parks Department prior to installation.

2.3 SEED

A. All seed shall be accurately labeled and tested for purity and germination, using the procedure sanctioned by the Association of Official Seed Analysts.
B. The seed tag shall indicate the date of testing, along with the testing results showing purity (percentage of the labeled species by weight), the percentages

of other crop, weed, inert material, dormant or hard seed, and also the percentage of seed that will germinate.

C. Seed labels or tags shall list the following:
   1. Manufacturer's name and address.
   2. Date and location of packaging.
   3. Name of the species of seed or seeds being sold.
   4. Variety of seed or seeds being sold.
   5. Percent purity of the seed. (Purity is defined as the percent weight of the entire sample of each seed species or variety that is present in excess of 5% of the total.)
   6. Percent other seed crop. (Other seed crop is defined as the percent weight of the entire sample of seed found in the sample that are less than 5% of the total seed weight and are generally recognized by the Association of Official Seed Analysts as seeds or plants grown as crops. If more than one crop species or cultivar is found in the sample, their weights are combined and reported.)
   7. Percent weed seed. (Weed seeds are all other seed species that the Association of Official Seed Analysts does not classify as crop seeds.)
   8. Percent inert matter. (Inert matter is defined as the percent weight of the sample that is not viable seed. It can include plant parts, broken seeds or other materials that are not viable seeds.)
   9. Percent germination.
   10. Percent hard and/or dormant seed. (Hard seed is the percent of the number of seeds that remain hard at the end of the testing period because they have not absorbed water because of an impermeable seed coat. Dormant seed is defined as the percent of the number of seeds, other than hard seed, that fail to germinate, but are determined to be viable by subjecting them to other seed testing techniques. Both of these seed types are generally considered to be seed that will germinate at a later date than seed reported in the percent germination calculation.)
   11. Percent Total Viability.
   12. Noxious weed seeds of the continental USA found in the seed mix.
   13. Last date the seed was tested for germination.
   14. Bulk pound quantity of seed contained in the bag.
   15. Pure Live Seed (PLS) pound quantity contained in the bag.

D. The upland seed mix to be used for disturbed areas that require re-seeding can be found in Section 6, Detail LP-16.

2.4 SOD

A. Sod shall be obtained only from approved sources. The sod shall have been mowed regularly and carefully maintained from planting to harvest.
B. The sod shall be free of grassy and broad-leaf weeds, contain no bare or burned spots, and be clean and strongly rooted. It shall be of the varieties noted on the plans and notes.
C. The sod shall be cut using approved methods and equipment. It shall be cut in pieces not exceeding one (1) square yard, with a minimum of three quarter (3/4) inch and maximum one and one half (1½) inch thickness. All sod for a particular contiguous area must have the same thickness.
D. For very large turf areas and all athletic fields, large roles of sod shall be used. All sod roles shall be of uniform and consistent thickness within the range described above.

2.5 TREE STAKES & TIES

A. Tree stakes shall be two by two (2x2) inch square or two (2) inch diameter round wood stakes ten (10) feet in length as indicated on the plans. Steel "T" posts or stakes may not be used.
B. Tree stake ties shall be manufactured of virgin flexible vinyl meeting ASTM-D-412 standards for tensile and elongation strength. The material shall be black in color for ultraviolet resistance. Hose and wire shall not be used.

2.6 TOPSOIL

A. All planting areas shall receive either a minimum of six (6) inches of stockpiled or imported topsoil in turf areas and twelve (12) inches in planting beds.
B. All topsoil used on this project (stockpiled or imported) shall meet the following criteria:
    1. pH: 5.5 - 8.0
    2. EC (electrical conductivity): .....<2.0 mmhos per centimeter
    3. SAR (sodium absorption ratio): .....<3.0
    4. % OM (percent organic matter): .....≥2%
    5. Texture (particle size per USDA classification):
        a. Sand:.....<70%
        b. Clay: .....<30%
        c. Silt:.....Balance

6. Stone Fragments (gravels or any soil particle greater than two (2) mm in size): .....<5% (by volume).
7. Rocks Present > 1.5": .....None.

C. In addition, the topsoil shall be fertile, friable, natural loam and shall be capable of sustaining vigorous plant growth. It shall be free of stones, lumps, clods of hard earth, plants or their roots, sticks, and other extraneous matter. The topsoil shall contain neither noxious weeds nor their seeds. It shall not be used for planting operations while in a frozen or muddy condition.

2.7 WEED BARRIER FABRIC

A. If specified, a weed barrier fabric shall be placed in all planting beds to prevent the growth and spread of unwanted vegetation. The fabric shall be Typar #3301B or approved equal.

2.8 MULCH

A. Rock mulch shall be used as a top dressing for all planting beds unless specified otherwise.
B. Rock mulch shall conform to the following criteria:
   1. Rock size shall be one and one half (1-1/2) inch minimum.
   2. Large rocks or gravel shall not be mixed in with the mulch.
   3. The mulch shall be primarily crushed rock.
C. Where used, the mulch shall be placed to a depth of three (3) inches on top of the topsoil.
D. In tree wells, use a three (3) inch layer of 50-50 mixture of Nutri-Mulch and topsoil.
E. Other mulches may be used only as specified on the drawings or in the planting notes and details and only as approved by the Parks Department.

2.9 FERTILIZERS

A. Commercial fertilizer shall be uniform in composition, dry, and free flowing. Deliver fertilizer mixed as specified in bulk or bag, showing weight analysis, formula, and manufacturer's name.
B. Where specified, a 16-16-16 balanced fertilizer shall be used. Any exceptions to this formula shall be based on horticultural recommendations resulting from a site-specific soils test and must be approved prior to application by the Parks Department.

2.10 HERBICIDES

A. Commercial fertilizer shall be uniform in composition, dry, and free flowing. Deliver fertilizer mixed as specified in bulk or bag, showing weight analysis, formula, and manufacturer's name.
B. Where specified, a 16-16-16 balanced fertilizer shall be used. Any exceptions to this formula shall be based on horticultural recommendations resulting from a site-specific soils test and must be approved prior to application by the Parks Department.

2.11 MOWSTRIP

A. Where turf areas are separated from planting beds, a concrete mowstrip shall be used. No other edging materials may be used unless specifically noted on the plans and approved by the Parks Department.
B. The mowstrip shall constructed using concrete having a compressive strength rating of two thousand five hundred pounds per square inch (2,500 psi) or greater, and a maximum slump of four (4) inches.
C. A three eighth (3/8) inch diameter rebar (#3) shall be placed continuously in the center of the mowstrip to provide support and help prevent differential settling of the mowstrip after cracking. Overlap joints a minimum of twelve (12) inches.
D. Include a concrete mowstrip at the base of all fences. Unless otherwise specified on the drawings, said mowstrip shall be six (6) inches deep and eighteen (18) inches wide, with the fence posts located in the center of the mowstrip.

PART 3 EXECUTION

3.1 GENERAL

A. Site Visit: The Contractor shall visit and inspect the site. He shall take into consideration known and reasonably inferable conditions affecting work. Failure to visit the site will not relieve the Contractor of furnishing materials and performing the work required.
B. Prior to any planting operations, the irrigation system shall be fully operational, and all planting areas shall be thoroughly moistened.
C. Where weeds or other undesirable vegetation are present in planting areas, the Contractor shall apply a contact herbicide a minimum of ten (10) days prior to commencement of any planting or irrigation work. Apply herbicide per manufacturer's recommendations. The poisoned vegetation shall be allowed to completely die back, including the roots, before proceeding with the work.

Dead vegetation shall then be removed from the site and disposed of in a legal manner.

D. The Contractor shall conform to the following requirements with regard to existing vegetation:
   1. The Contractor shall be fully responsible for any damage to existing trees or shrubs. He shall use all reasonable means to protect and preserve plants on the project not designated for demolition.
   2. No pruning, thinning, or cutting of existing vegetation shall be allowed unless written permission is given by the Parks Department.
   3. The Contractor shall replace any trees or existing shrubs damaged by him or his sub-contractors with like kind and size.

3.2 PLANTING SEASONS

A. All new plant installation shall be completed between April 15 and October 15. If planting must be done after October 15 or before April 15, the Contractor shall obtain specific approval to do so from the Parks Department prior to beginning any planting operations.
B. No planting shall be done in frozen soil or during unfavorable weather conditions, subject to the approval of the Parks Department.
C. Native seed mixes should be applied in late fall when there is no chance for immediate germination. The seed should be allowed to overwinter and germinate the following spring using natural spring moisture. If applied during the summer, a temporary irrigation system shall be required to initiate germination and keep the plants alive during the summer and fall months where little or no natural moisture is available.
D. Turf grass planted from seed (whether drill seeded or hydroseeded) shall require a permanent irrigation system.

3.3 TOPSOIL

A. The Contractor shall obtain a soil analysis from any authorized soil testing agency of any existing stockpiled or imported topsoil to be used on the project to verify that it conforms to the topsoil specifications. Test results shall include horticultural recommendations (N, P, and K values and recommended amendments). The soil samples shall be obtained per the testing agency directions. Allow ten (10) working days to obtain test results. The costs for such testing shall be the responsibility of the Contractor.
B. Prior to delivery of the imported topsoil to the site, the Contractor shall provide to the Parks Department the name and location of the topsoil source, along

with the certified soil analysis of the topsoil to be used. The analysis shall verify that the proposed topsoil meets the topsoil specifications and is capable of supporting healthy plant growth.

C. After imported topsoil has been delivered to the site, a second soil test may be required to verify that it is indeed the same soil as previously tested and designated for use in this project. No substitution of topsoil shall be allowed without prior written authorization from the Landscape Architect.
D. The following procedure shall be followed in placing all topsoil:
    1. All cut areas to receive topsoil which have a slope of less than ten (10) percent shall be cross-ripped to a depth of two (2) to four (4) inches.
    2. The subgrade material shall be rough graded to plus or minus one tenth (±0.1) foot of the final rough grade, which will allow the Contractor to achieve final finished grade through the placement of the topsoil.
    3. The surface of the subgrade shall be scarified to a depth of two (2) inches to provide a transition zone between the subgrade and the topsoil. Place the topsoil on the subgrade and fine grade to the final finished grade and topsoil depths as indicated on the drawings and in these specifications.
    4. Any required soil amendments (i.e., mulch, organic matter, etc.) shall be placed directly on the topsoil at the required rates and spread evenly over the planting area. The amendments shall then be thoroughly blended into the topsoil to a depth of four (4) inches. Where only a dry, granular fertilizer is to be added, it may be applied to the surface and raked in during the fine grading procedures.
E. The Contractor shall maintain a minimum of two (2) percent drainage away from all buildings, structures, and walls. Finished grades shall be smoothed to eliminate puddling or standing water.
F. All finished grades shall be approved in writing by the Parks Department prior to installation of any plant materials.

3.4 PLANT CONDITION

A. All precautions customary in commercial landscape installation practice shall be taken in preparing plants for planting. Workmanship that fails to meet these minimum standards shall be rejected. All balled and burlapped plants shall have firm and natural balls of earth around their roots. No plant shall be planted if the root ball is cracked or broken, either before or during the process of planting. Loose, broken or manufactured root balls shall be rejected.
B. All plant materials in five (5) gallon containers or larger shall have been established in that container for a period of not less than six (6) months and not

more than two (2) years. Plant material shall not be root bound. They shall exhibit sound, healthy, and vigorous growth and be free from diseases and pests.

C. The Contractor shall have the Parks Department approve plant material size and quality prior to installation. Any plants which are not true to form, appear stressed or unhealthy, are infested with pests, infected with disease, or are undersized for their containers shall be rejected.
D. All plant material shall be planted as soon upon arrival on the premises as possible. If planting cannot be done immediately, the roots shall be protected from the sun and kept in a moist condition until the time of planting.
E. If it is anticipated that planting will not be done for more than twenty-four (24) hours after the arrival of plants upon the premises, the balled and burlapped stock shall be heeled-in on the north side of a building and all roots completely covered with dirt which shall be wetted down frequently. Care will be taken in the handling of all ball and burlap materials so that the earth around the roots is disturbed as little as possible.

3.5 PLACEMENT OF PLANTS

A. Plants shall be generally located as indicated by the drawing. The Contractor shall stake out the location of all plants and planting areas with identified plant stakes, and no excavation shall commence until such locations have been approved by the Parks Department.
B. In the event that underground construction work or obstructions are encountered during excavation of the plant holes, alternate locations will be assigned and approved by the Parks Department.
C. Except for turf and groundcovers, plants shall not be placed within twenty-four (24) inches of sprinkler heads.
D. The Contractor must locate and stake any sprinkling head or valve box within the dripline of a proposed or existing tree location and must establish the direction of the lateral or main irrigation line that serves the staked sprinkler head or valve box. This procedure will help eliminate damage to existing or future tree roots.

3.6 PLANT INSTALLATION

A. All concrete work, sprinkling systems, and finished grading shall be completed and approved by the Parks Department before any planting of the specified plant materials is begun.

B. No tree planting shall be initiated until sprinkling system is complete and tested. However, tree planting shall precede lawn planting.
C. Each plant will be placed in an individual plant pit. The sharing of pits shall not be allowed.
D. All trees and shrubs shall be planted in pits as detailed in the planting details contained herein or as noted on the drawings. Tree and shrub pits shall be circular in outline, with a diameter at least two (2) times the diameter of the root ball of each plant to be installed. They shall be one to two and one half (1 - 2 ½) inches shallower than the root ball depth. When the plant is properly placed in the plant pit, the root collar shall be approximately one (1) inch above finished grade of the topsoil. For perennial plants (which have no root collar), the top of the root ball shall be even with the finished grade or the topsoil. The sides of the plant pit shall be roughened, and not smooth or sculpted.
E. Plant backfill mix shall be one hundred (100) percent native site soil.
F. For container grown plants, remove the container and place the plant vertically in the plant pit, directly on undisturbed soil. The root crown or collar shall be at or just above the finished grade. Perennial and ornamental grass plants shall be planted with the root collar at finished grade.
G. For balled and burlapped plants, place the plant vertically in the center of the pit, with the root ball resting on undisturbed soil. Cut and remove the wire basket and burlap or other wrapping material from the root ball. This may be done with the root ball in the pit. Any burlap or wire pieces underneath the root ball may be left in place if they cannot be removed. Do not fold the burlap over but cut away as much as possible without disturbing the root ball. No burlap shall be pulled from under the root ball. Backfill the bottom one third (1/3) of the pit as the wire and burlap are removed. In all cases, maintain the integrity of the root ball.
H. Specified backfill material shall be carefully and firmly worked and tamped under and around the root ball to fill all voids. When backfilled and compacted to two thirds (2/3) the depth of the pit, thoroughly water with a hose to completely soak the roots and remove any air pockets.
I. The plant pit shall then be completely backfilled with the specified backfill mix and tamped well. A shallow watering basin or rain cup shall be formed around each plant. This basin will be equal in diameter to that of the original planting pit.
J. Monitor all plants to ensure that no settling occurs. Plants which settle shall be immediately replanted by removing the plant, adding more soil mixture to raise the plant to the proper height, and backfilling as previously described. This shall occur with no additional expense to the Owner.

K. After planting, the following operations shall be performed:
   1. Stake and mulch all trees per installation details.
   2. Remove all nursery stakes, ties and tags from all plants. Prune and remove any dead, damaged, or broken branches. Maintain side growth on all trees.

3.7 STAKING

A. All trees, including evergreen trees, shall be staked.
B. Staking shall be performed as follows:
   1. Two (2) 2"x 2" square or 2" diameter round wood stakes, ten (10) feet in length, shall be used to support each tree planted under this contract unless otherwise indicated.
   2. Tree ties shall conform to the staking detail shown on the planting detail sheet.
   3. Each stake will be located adjacent to the root ball, on opposing sides, to provide maximum support to the trunk. Do not penetrate the root ball with the stake.
   4. The stakes will be driven into the pit bottom after the tree has been placed in the pit, but before backfilling begins so as to avoid damage to the roots.
C. Stakes and ties shall be removed after one (1) full growing season from the time the tree was installed.

3.8 WATERING

A. All plants shall be thoroughly watered immediately after planting. This shall mean full and thorough saturation of all backfill in the pits and beds during the same day of planting. Water shall be applied only by open end hose at very low pressure to avoid creating air pockets, causing injury to the plant, or washing away of backfill. When installed, watered, and fully settled, the plants shall be vertical with the root collar at the appropriate level.
B. Subsequent watering shall be provided by the site's irrigation system. The Contractor shall insure that all plants, especially trees, receive sufficient water to maintain healthy growth and vigor. Overwatering shall be avoided, and prolonged saturation of the soil around the trees shall be eliminated by appropriately controlling the irrigation circuit which provides water to that area.

3.9 WEED BARRIER FABRIC (IF SPECIFIED)

A. Prepare final grade prior to placing fabric. Placement of fabric shall comply with the following:
   1. Place pre-emergent herbicide prior to installing fabric.
   2. Install fabric directly on topsoil. With drip tubing, install tubing on top of fabric.
   3. Overlap and secure per manufacturer's recommendations.
   4. Cut an "X" where plant will be located. Peel back corners to allow plant installation. Fold corners back into place after plant is installed.

3.10 MULCHING

A. Mulch shall be placed to a depth of three (3) inches on top of the topsoil in all planting beds and over tree planting pits.
B. The finished grade of the mulch shall be as follows:
   1. Two (2) inches below the surface or finished grade of any paving, mowstrips, or walks adjacent to the planting area.
   2. At adjacent finished grade of the turf surrounding tree planting pits.
C. In tree pits, the mulch shall be kept six (6) inches away from the base of the tree.
D. Just prior to placement of the mulch, the Contractor shall treat the mulched areas with a pre-emergent herbicide according to the manufacturer's recommendations.

3.11 SOD INSTALLATION

A. The Contractor shall notify the Parks Department of the source of the sod prior to placement.
B. The sod shall be free of grassy and broad-leaf weeds, contain no bare or burned spots, and be clean and strongly rooted. It shall be of the varieties noted on the plans and plant materials schedule.
C. The sod shall be cut using approved methods and equipment. It shall be cut in pieces not exceeding one (1) square yard, with a uniform thickness on all pieces. Sod thickness may vary between a minimum of one (1) inch and maximum one and one half (1 ½) inches but must be consistent throughout the project. For very large turf areas and all athletic fields, large rolls of sod shall be used. Sod shall be placed using equipment specifically designed to lay large sod rolls.
D. The sod shall be stripped and delivered to the site not more than twenty-four

(24) hours prior to laying. The sod shall be maintained in a moist and healthy condition to encourage immediate growth.

E. The following procedure shall be followed when installing the sod:
   1. Lay the sod on smooth, moist topsoil, working off planks if required.
   2. Rake the topsoil to loosen and level prior to placing each course of sod.
   3. Lay strips perpendicular to the direction of the slope. Strips shall be parallel to each other, with their end seams staggered. The sod shall be neither stretched nor overlapped, and all joints shall be butted tightly together.
   4. Roll the sod immediately after placing and thoroughly water with a fine spray to a depth sufficient that the underside of the new sod and the soil immediately below the sod are thoroughly wet.
   5. On slopes two (2) horizontal to one (1) vertical or steeper, lay the sod perpendicular to the slope and secure every row with wooden pegs at two (2) feet maximum on center. Drive the pegs flush with the soil portion of the sod.
   6. Sod pieces shall be laid tightly together. Sod areas with gaps caused by pieces not being laid tightly enough together or with ridges from overlapping pieces shall not be accepted and the Contractor will be required to re-lay the sod.

3.12 HYDROSEEDING DISTURBED AREAS (NOT TURF)

A. General:
   1. Wood fiber mulch shall be virgin wood fiber, free of growth- or germination-inhibiting substances. The mulch shall be air dried with not more than fifteen (15) percent moisture by weight. The total organic weight shall be a minimum of ninety-eight (98) percent. Inorganic ash content shall be 0.7±0.2 percent. Water holding capacity shall be 1000G/100G (oven dried weight). The pH range shall be 4.0 - 6.0. The fiber length shall meet the following:
      a. Fifty (50) percent shall be at least 0.15 inches in length or longer.
      b. Fifty (50) percent shall be retained on the twenty-eight (28) mesh screen.

      It shall be Echofiber or Conwed or approved equal.
   2. The seed mix shall be as specified on the plans. Provide written certification that the seed conforms to Utah seed law and is in compliance with Utah State Department of Agriculture regulations.
   3. The tackifier shall be M-Binder or Plantego or pre-approved equal.
   4. The fertilizer shall be a chemically prepared, dry, homogenous pellet product with a balanced formula of 16-16-16.

5. Application rates shall be as follows:
   a. Wood fiber mulch .....50 pound(min.)/1,000 SF
   b. Seed mix .....See plans (7 pounds/1,000 SF typ.)
   c. Tackifier.....100 pounds/Acre
   d. Fertilizer.....1 pound or actual nitrogen/1,000 SF
   e. Water.....92 gallons/1,000 SF

B. One-step preparation and application of hydroseed mulch shall be as follows:
   1. The wood fiber mulch, seed, tackifier, fertilizer, and water shall be mixed together in a hydroseeding machine having a capacity of at least two thousand (2,000) gallons to allow for a homogeneous slurry which is thoroughly mixed and can be applied easily without clogging. The machine shall be mounted on a traveling unit which is either self-propelled or drawn by a separate unit. Equipment used in the hydroseeding process shall be thoroughly cleaned of all seed and other materials used in any previous hydroseeding process, prior to hydroseeding on this project.
   2. The equipment shall have a built-in agitation system and operating capacity sufficient to agitate, suspend, and homogeneously mix a slurry containing not less than fifty (50) pounds of organic mulching amendment plus chemical additives and solids for each one hundred (100) gallons of water.
   3. The slurry shall be prepared at the site and its components shall be mixed to supply the rates of application as specified. The slurry preparation shall begin by adding water to the tank when the engine is at one half (½) throttle. The engine throttle shall be open to full speed when the tank is one half (½) filled with water. All organic amendments, fiber, and chemicals shall then be added by the time the tank is two thirds (2/3) to three fourths (3/4) full. At this time and not before, the seed mix shall also be added. Spraying shall commence immediately when the tank is full, and the slurry is mixed.
   4. Apply the hydroseed to form even appearing cover over the required areas. The slurry shall be applied in a downward drilling motion via a fan stream nozzle. It is important to ensure that all of the components enter and mix with the soil. Use only qualified and trained personnel to ensure uniformity of the hydroseed applications.
   5. The hydroseeding slurry components shall not be left in the hydroseed machine for more than two (2) hours in order to avoid seed deterioration.

C. A two-step hydroseeding procedure may be used in lieu of the one-step method. The two-step procedure shall consist of first, sowing the seed mix by broadcasting, and second, applying the hydromulch. Specifically, this procedure shall conform to the following:

1. The seed shall be broadcast over the planting bed at the rates noted in the plant schedule. The seed shall be sown in two (2) perpendicular directions with a cyclone seeder or other similar mechanical seeder. Lightly rake the seed into the soil.
2. Apply a fine spray watering immediately after each area has been sown.
3. Prepare and apply hydromulch slurry (minus the seed mix) according to the procedure outlined in 3.12 B, steps 1 through 5 above.

3.13 DRILL SEEDING

If seeding operations are to be done using a drill seeding method, the following requirements shall apply:

A. All topsoil shall be placed, and the fine grading completed prior to any seeding operations.
B. The seed bed shall be prepared by loosening the surface of the soil and mixing the specified fertilizer into the top two (2) inches of the topsoil. The finished surface shall be smooth and even, with no high or low spots, no rocks, nor other deleterious materials. The use of a Rotodairon or similar piece of equipment to prepare the seed bed is encouraged.
C. The seed shall be drilled using a Brillion type seeder, specifically designed for drilling grass seed. An agricultural grain drill is not acceptable. A cultipacker, harrow, or similar apparatus shall be a part of the seeder or dragged behind to help ensure that the seed is covered by the soil and the surface is left smooth and even.

3.14 CLEAN UP

A. Throughout the course of planting, excess and waste materials as well as excavated subsoil shall be continuously and promptly removed. All areas shall be kept clear and all reasonable precautions taken to avoid damage to existing structures, plants, and grass.
B. When planting has been completed in an area, it shall be thoroughly cleaned of all debris, rubbish, subsoil, and waste materials. These shall be removed from the property and disposed of legally. All planting tools shall also be put away.
C. The ground surface shall be left in a condition satisfactory to the Parks Department.

3.15 RECORD DOCUMENTS

A. The Contractor shall keep a record of all departures from the working drawings that occur during construction. These changes shall be shown on a clean set of prints, and the prints kept on the job site at all times for review.
B. As a part of his observation work, the Parks Department shall review the record drawings regularly to verify that changes are being recorded. At the conclusion of the work, the Contractor shall present to the Owner fresh, clean drawings of all the changes made and recorded previously and they shall become part of the permanent record of the project.

3.16 MAINTENANCE

A. Substantial Completion:
    1. At Substantial Completion of all planting work outlined in these plans, the Contractor shall contact the City to arrange for a walk through to verify that all aspects of the work have been completed. Work must be fully completed (except for final clean-up) according to all plans, notes, and specifications and exhibit professional workmanship. Substantial completion shall be defined as the complete installation of all plant materials, staking, mulching, and other work on the project in its entirety. Substantial completion shall not be given on designated portions of the project.
    2. Notice by the Contractor shall be given, in writing, at least three (3) days in advance to the Parks Department so that proper scheduling can be made for those who are to attend.
    3. At the appointed time, an inspection of all plant materials, including staking and mulching, shall be made.
    4. A list of uncompleted items (punch list) shall be generated by the Parks Department and distributed to the Contractor and other involved parties within three (3) days of the substantial completion inspection. Each item on the punch list shall be corrected before the project will be approved and accepted by the Parks Department. The Contractor will be back charged for time spent by the Owner and any consultants who have been brought to the site for a final inspection when the project is not ready for said inspection.
B. Maintenance/Establishment Period:
    1. The maintenance/establishment period shall begin one (1) day after the substantial completion inspection. The Contractor shall complete all punch list items during this period, as well as maintain and operate the entire irrigation system.

2. In cases where the maintenance/establishment period runs beyond October 15 of any given year, the balance of the maintenance/establishment period days shall be extended into the spring of the following year. Counting of the balance of days shall begin no sooner than April 15, unless mutually agreed upon by both the Contractor and the City prior to that date. Early counting shall be based on weather conditions at the time.
3. The Contractor shall maintain all plantings until the turf is fully established. The turf shall be considered fully established when grass stands come in uniform and thick, with no bare or thin spots, and roots have begun to spread and knit together. No weeds shall be allowed in the grass. If the turf grass is hydroseeded, the Contractor must complete the hydroseeding by September 1. The maintenance/establishment period shall be a minimum period of sixty (60) days.
4. The maintenance work required shall include but not be limited to the following:
    a. Appropriate watering of all plant materials.
    b. Weeding and removal of all weeds from groundcover and planting areas.
    c. Replacement of any dead, dying, or damaged trees, shrubs, perennials, or groundcover.
    d. Filling and replanting of any low areas which may cause standing water.
    e. Adjusting or sprinkler head heights and watering patterns.
    f. Filling and re-compaction of eroded areas, along with any required reseeding and/or replanting.
    g. The grass shall be mowed when the blades reach three (3) inches tall and maintained to a minimum height of two (2) inches. No more than one third (1/3) of the blade shall be removed per cutting. The cutting frequency shall be once every five (5) to seven (7) days depending upon grass height and growth rate.
    h. Weekly removal of all trash, litter, clippings, and all foreign debris.
    i. At thirty (30) days after planting, a balanced fertilizer (16-16-16) shall be applied to the grass areas at a rate of one half (½) pound of nitrogen per one thousand (1,000) square feet.
    j. At intervals of thirty (30) days after the first application of fertilizer to the grass, apply a balanced fertilizer (16-16-16) at a rate of one half (½) pound of nitrogen per one thousand (1,000) square feet until the grass is established.
5. The maintenance period shall not end until Final Acceptance of the project has been completed.

C. Final Acceptance:
   1. A final inspection shall be held at the end of the maintenance period to ensure that all punch list items have been completed and the entire project is ready for acceptance by the Owner.
   2. Upon satisfaction that the Contractor has completed all punch list items, the irrigation system is fully and completely functional, and the required As-Built drawings, mylars and maintenance manuals have been submitted, the Owner shall accept the project.
   3. An official letter of final acceptance shall be prepared and issued by the Owner to the Contractor and the Landscape Architect. Upon final acceptance of the project by the Parks Department, the Owner shall assume full responsibility for the project, and the guarantee period shall begin.

3.17 WARRANTY

A. Upon final acceptance of the project as being properly installed, the Contractor shall warranty or guarantee the plant materials as follows:
   1. All shrubs and groundcovers shall be warranted by the Contractor as to growth and health for a period of one (1) year after completion of the maintenance period and final acceptance.
   2. All trees shall be warranted by the contractor to thrive and grow in an acceptable upright position for a period of one (1) year after completion of the maintenance period and final acceptance.

B. The Contractor shall, within fifteen (15) days after receiving written notification by the Parks Department, remove and replace all warranted plant materials which die or become unhealthy or appear to be in a badly impaired condition at any time during the warranty period. Any plants that settle below or rise above the desired finished grade shall also be reset to the proper grade.

C. All replacements shall be plants of the same kind, size, and quality as originally specified in the "plant list" and they shall be furnished, planted, staked, and maintained as specified herein at no additional cost.

D. The Contractor will not be responsible for plants destroyed or lost due to occupancy of the project, vandalism on the part of others, or improper maintenance or lack thereof.

E. At the conclusion of the warranty period and prior to final inspection of the plant materials by the Parks Department, the Contractor shall remove all tree stakes. This period of time shall be approximately 1 year after initial planting.
   1. Stakes shall be removed by first cutting the ties securing the tree to stakes and secondly pulling stakes or guys out of the ground.

2. Stakes shall not be broken off above, at, or below ground levels but removed completely.

F. At the conclusion of the warranty period a final inspection of all planting included in this contract shall be made by the Parks Department. At that time, any plant found to be unhealthy, broken, damaged, or otherwise in an impaired condition shall be noted. Plants so noted shall be removed immediately from the site by the Contractor and replaced by him, as specified under this section, with plants of like kind and size in the manner previously specified for the original planting without extra compensation.

DIVISION 33
UTILITIES

SECTION 33 05 03
COPPER PIPE

PART 2 PRODUCTS

2.2 CONNECTIONS

Revise article A to read as follows:

A. Compression only.

SECTION 33 05 05
DUCTILE IRON PIPE

PART 2 PRODUCTS

2.1 PIPE AND FITTINGS

A. Buried Applications

Add paragraph 7 as follows:

7. MJ fittings shall be EBBA Iron MEGALUG, Tyler TUFGrip, Star Fittings USA or approved equal.

2.2 COVERINGS

Add article B as follows:

B. All new ductile iron pipe shall be wrapped with an 8 mil Poly Wrap to minimize corrosion.

PART 3 EXECUTION

3.1 INSTALLATION

Add article C and D as follows:

C. Pipe in vaults: All ductile iron pipe in vaults shall be epoxy coated with NSF compliant paint in safety blue for culinary and safety purple for secondary.

D Under no circumstances shall the pipe or accessories be dropped into the trench.

SECTION 33 05 06
POLYETHYLENE PIPE

PART 2 PRODUCTS

2.2 CORRUGATED WALL PIPE SYSTEMS

Add article E as follows:

E Slots or perforations shall be in corrugation valleys only and should be clean and free of burrs.

Add article 2.4 as follows:

2.4 Pressurized Polyethylene Pipe and Tubing

A Consult with Herriman City Engineering Department to obtain the technical specification 33 05 33.23 Polyethylene Pressure Pipe and Tubing.

PART 3 EXECUTION

3.1 INSTALLATION

Add article Cand D as follows:

C. Installation of HDPE pipe shall be as follows:
1. HDPE corrugated pipe is lightweight which makes handling easy. However, it can be shifted laterally in the trench or may float if not held in place with soil or other methods.
2. The pipe depends on a combination of pipe stiffness and select and common backfill strength to perform as a structure. Select material in the pipe zone should be compacted to at least 90% in non-traffic easement areas and 95% in traffic areas and should contain no particles which do not comply with the gradation of untreated base course.
2. Heavy construction equipment (H-20 axle loads) should not be permitted to pass over the pipe unless a minimum of 2-feet of well compacted soil or gravel is covering the pipe.
3. High-energy compactors such as Hydro-Hammers should not be used until the pipe is covered by at least 4-feet of soil.

4. In the absence of a special provision provided by the OWNER, use ASTM D-2321 as a recommended installation guide.
5. To ensure adequate compaction in the haunches, lift thickness prior to compaction from the bedding to the pipe spring line shall not exceed 4-inches.

D Under no circumstances shall the pipe or accessories be dropped into the trench.

SECTION 33 05 07 P
POLYVINYL CHLORIDE PIPE

PART 2 PRODUCTS

2.1 PRESSURE PIPE SYSTEM

Add article E as follows:

E. MJ fittings shall be EBBA Iron MEGALUG, Tyler TUFGrip, Star Fittings USA or approved equal.

PART 3 EXECUTION

3.1 INSTALLATION

Add article C as follows:

C Under no circumstances shall the pipe or accessories be dropped into the trench.

SECTION 33 05 23.35
TRENCHLESS UTILITY INSTALLATION

PART 1 GENERAL

1.1 SECTION INCLUDES

Add article B as follows:

B. Definitions for the materials and construction requirements for steel casings under canals, railroad tracks, highways, and Interstates. All construction operations shall be subject to the approval of the canal, Railroad Company or UDOT whose facility is being crossed. The Contractor shall make application to and secure permission from the canal, Railroad Company or UDOT before commencing work within the right-of-way. The Contractor shall provide all insurance and the services of all watchmen and flagmen required by the Railroad Company or UDOT. The Contractor will pay the Railroad Company and UDOT for their inspection services.

1.2 REFERENCES

Replace article A as follows:

A. ASTM Standards:
A139 Pipe, Electric-Fusion (Arc)-Welded Steel Pipe

PART 2 PRODUCTS

2.1 STEEL CASING

Replace article A as follows:

A. ASTM A139, Grade C steel pipe for jacking operations, minimum wall thickness as shown below, minimum yield stress of 42,000 psi. Use a casing with a diameter equal to the outside bell diameter of the pipe plus four (4) inches minimum.

Casing Diameter	Minimum Wall Thickness	
22″ or less	.3750″	3/8″

Casing Diameter	Minimum Wall Thickness	
Over 22″ – 28″	.4375″	7/16″
Over 28″ – 34″	.5000″	1/2″
Over 34″ – 42″	.5625″	9/16″
Over 42″ – 48″	.6250″	5/8″

Add subpart 2.4 as follows:

2.4 CASING SPACERS

A. Factory manufactured casing spacers shall be installed according to manufacturer's recommendations on all carrier pipes passing through a casing pipe. Wooden skids will not be allowed as an alternative.

Casing spacer shall be a two-piece shell made from T-304 stainless steel of a minimum 14-gauge thickness. Each shell section shall be lined with a 0.090" thick material that prevents slippage. Bearing surfaces (runners) shall be ultra-high molecular weight polyethylene (UHMW) or similar material to provide abrasion resistance and a low coefficient of friction (0.12). The runners shall be attached to support structures (risers) at appropriate positions to properly support the carrier within the casing and to ease installation. Risers shall be made of 10-gauge T-304 stainless steel. Bottom risers 6" and over in height shall be reinforced.

Add subpart 2.5 as follows:

2.5 CASING END SEALS

A. Casing end seals shall be made of neoprene rubber or nitrile and secured with T-304 stainless steel bands.

B. Casing end seals shall be of the pull-over or wrap-around type. Where practical, use the pull-over type. Where existing utilities make this impractical, the wrap-around type may be used, provided the edge of the wrap is sealed with butyl mastic or other approved sealer to prevent seepage.

PART 3 EXECUTION

3.2 JACKING PROCEDURE

Add articles G-K as follows:

G. Circular casing joints shall be field welded as the jacking process progresses.
H. The casing interior shall be completely excavated and cleaned prior to installation of the carrier pipe.
I. All required approach trenches or working pits shall be excavated and shored. Provisions shall be made for a drain sump in one corner of the working pit to allow for the accumulation and pumping of seepage water, if ground water is expected to be encountered.
J. Both ends of all casings shall be sealed between the casing and carrier pipe.
K. Casings shall be installed accurately to the line and grade shown on the Drawings. Casings shall be installed to grade with sufficient accuracy to permit installation of the carrier pipe to the design grade shown on the Drawings or to the cover depth required. Establish base lines and benchmarks at each casing location. Instrument checks of the line and grade shall be made by the Developer/Contractor at intervals sufficient to maintain the casing on line and grade.

3.4 PIPE SUPPORT IN CASING TUNNEL

Add articles E-F as follows:

E. The carrier pipe shall be installed to the grade shown on the Drawings. Casing spacers shall be fastened to the carrier pipe and spaced per the manufacturer's recommendations.
F. Do not fill the casing with sand.

Add subpart 3.5 as follows:

3.5 CASING SPACERS

A. Standard positioning within the casing pipe shall be sized such that the height of the risers and runners are to provide not less than three-fourths inch between the casing pipe and the outside diameter of the bell of the carrier pipe.

B. Centered & Restrained positioning within the casing pipe shall be sized such that the height of the risers and runners are to center the carrier pipe in the casing pipe with a top clearance of one-half inch minimum.

C. Restrained positioning within the casing pipe shall be sized such that the height of the risers and runners are to provide not less than three-fourths inch between the casing pipe and the outside diameter of the bell and a top clearance of one-half inch minimum.

D. When casings cross railroad or UDOT facilities, meet the size and clearance requirements cited above or the following, whichever is larger:

   1. Railroad facilities: The inside diameter of the casing shall be no less than 2 inches greater than largest outside diameter of carrier pipe, joints or couplings.
   2. UDOT facilities: Provide a minimum clearance of 2 inches between the outside of the barrel of the carrier pipe and the inside of the casing.

E. All welds and metal surfaces shall be chemically passivated, and all hardware is to be stainless steel.

SECTION 33 05 25
PAVEMENT RESTORATION

PART 3 EXECUTION

3.5 BITUMINOUS PAVEMENT RESTORATION

Add article G as follows:

G. Where trenches are excavated through bituminous surfaces roads, driveways or parking areas, the surface shall be restored and maintained as follows:
   1. A temporary gravel surface shall be placed and maintained according to Section 32 15 40.
   2. All asphalt to be removed must be saw cut in a smooth, straight line and as shown in APWA Plan 255
   3. Within two (2) working days (weather permitting), the bituminous surface shall be restored by standard paving practices. The minimum thickness shall match the existing surrounding asphalt or as shown in *Pavement Structural Section Design* in Section 4.03, whichever is greater.
   4. Cold Weather Patching
      Any trenches cut between October 15th and April 15th, or when asphalt plants are closed and not operating shall be patched the same day of the cut with a good quality cold mix and maintained until asphalt plant opens again. When the asphalt plant opens, the patch shall be removed, and a new patch of hot mix asphalt shall be placed within twenty (20) days of plant opening. Dates shall be coordinated and scheduled with the Engineering Department when the cut permit is issued and entered in the calendars for follow up.

SECTION 33 08 00
COMMISSIONING OF WATER UTILITIES

PART 1 GENERAL

1.2 REFERENCES

Add article C as follows:

C. ANSI/NSF Standards.
ANSI/NSF 60: Drinking Water Treatment Chemicals.

1.5 PROJECT CONDITIONS

Replace article B as follows:

B. Video and log of visual examination. CONTRACTOR shall provide said video inspection which shall include the actual footage of the line being inspected and shall be accomplished by an independent party approved by the ENGINEER at no additional cost to the OWNER.

PART 3 EXECUTION

3.2 PREPARATION

Modify article C to read as follows:

C. Remove debris, sediment and/or other material from installed pipe prior to testing, leaving pipe in a clean manner. All material collected shall be removed from pipe prior to connecting to existing piping system. Do not discharge or flush sand, gravel, concrete, debris or other foreign material into existing pipeline system. Flushing with clean water only will be allowed but with minimal flows to eliminate exceeding capacities of the existing gravity systems. Flushing into existing pressurized water systems will not be allowed.

3.3 GRADE AND ALIGNMENT TEST

Add article B as follows:

B. Deflection in the waterline alignment without fittings may be allowed up to 50% of the manufacture's allowable deflection, two times the manufacture's allowable radius, or the minimum radius shall not be less than 760 feet and 2,300 feet for DIP and PVC pipe respectively (assuming a maximum stick length of 20 feet), whichever is more stringent.

3.6 EXFILTRATION TEST

Replace articles A-C with the following:

A. Preparation: Hydrostatic tests are to be used. There will be no air tests of the pipelines.
B. Air Test: There will be no pressure air tests of the pipelines.
C. Hydrostatic Test:
    1. Pressure Test: All newly laid pipes, fittings, valves, hydrants, joints and other hardware will be subject to examination under pressure during the hydrostatic test. The pipe shall be subjected to a pressure of 200 psi or 50 psi above working pressure, whichever is higher. The pressure test shall be conducted after the pipe has been partially backfilled. Any defective pipes, fittings, hydrants, valves or other hardware discovered in consequence of this pressure test shall be removed and replaced by the CONTRACTOR with sound material, at no expense to the OWNER, and the test shall be repeated until the ENGINEER is satisfied. All areas of the water system must meet this requirement, to ensure all pipe segments and appurtenant fittings meet the required pressure.
    2. Duration of Pressure Test: The duration of each hydrostatic pressure test shall be at least two (2) hours.
    3. Test Procedure: Pipes shall be slowly filled with water and the specified test pressure, measured at the point of lowest elevation within each pressure zone, shall be applied by means of a pump connected to the pipe in a satisfactory manner. Testing against closed valves will be allowed with an acceptable bacteria test result. The pump, pipe connection and all necessary apparatus including gauges and meters shall be furnished by the CONTRACTOR. CONTRACTOR shall provide all labor and equipment necessary to perform the test.

4. Expelling Air Before Test: Before applying the specified test pressure, all air shall be expelled from the pipe. To accomplish this, air release mechanisms shall be installed, if necessary, at points of highest elevation, and afterwards tightly capped.
5. No piping installation will be acceptable until the leakage is less than the amount allowed by industry standards for the type of pipe material being tested. Or, if no standard prevails, then the number of gallons per hour is determined by the formula:

$$Q = [LD \times P^{1/2}]/133{,}200$$

Where:

Q = allowable leakage, gallons per hour
L = length of pipe under test, feet
D = diameter of pipe, inches
P = average test pressure, psig.

3.8 OBSTRUCTION TEST

Replace article A with the following:

A. Obstructions:
1. Visually examine pipe internally for obstructions, reductions in pipe shape, grade, infiltration and required lateral connections by means of a closed-circuit televised recording. Said inspection shall be by closed circuit video inspection of the completed section or sections and shall log the location of all service taps and problems areas which shall include the actual footage of the line being inspected. Video Log shall become the property of Herriman City. Any defective workmanship indicated by video inspection shall be repaired by the CONTRACTOR at no expense to the OWNER.
2. Prior to commencement of obstruction test, the pipe must be water flushed to clean and remove all debris. All debris must be trapped on a screen and/or blocked and removed from the downstream manhole and not allowed to enter the existing piping network.
3. When a visual test is not feasible, and when approved by the ENGINEER, a round, incompressible mandrel shall be passed through the pipeline. The diameter of the mandrel shall be 1-inch less than the inside diameter of the pipeline and the length of the mandrel shall be twice the diameter of the pipeline.

SECTION 33 11 00
WATER DISTRIBUTION AND TRANSMISSION

PART 1 GENERAL

1.2 REFERENCES

Add articles F, G and H as follows:

F. AWWA M14: AWWA Recommended Practice for Backflow Prevention and Cross-Connection Control.
G. AWWA C909: AWWA Standard for Molecularly Oriented Polyvinyl Chloride (PVCO) Pressure Pipe (ULTRA BLUE), 4 In. through 12 In. for Water.
H. ANSI/NSF 61: Drinking Water System Components – Health Effects

1.3 PERFORMANCE REQUIREMENTS

Replace article A with the following:

A. Depth of Cover
   1. Minimum cover required shall be 48 inches for culinary mains. Minimum cover on culinary transmission lines shall be 60 inches. Cover over utilities and between railroad tracks or roadways shall be sufficient to adequately protect such utilities, from potential loading of track or roadway, either during construction or final finished surface.
   2. Minimum cover required shall be 36 inches for secondary water mains. Minimum cover required shall be 48 inches for secondary transmission lines.
   3. Should cover be insufficient to adequately protect utility, encasement or casings shall be required to protect affected utility. All casings shall meet the material requirements outlined in Part 2 of 33 05 23.35.
   4. Maximum allowable cover shall be 72 inches, unless otherwise authorized by City Engineer.
   5. Water lines with less than the minimum cover require authorization from the City Engineer and additional protection to withstand frost and external loads.

Add articles C and D as follows:

C. Connection to existing pipeline shall be made as such times and within the time limits as directed by the City.
D. Secondary water mains shall not be installed at side or rear property lines. All lines will be installed within a Public Right of Way.

PART 2 PRODUCTS

2.1 PIPES AND FITTINGS

Replace article D with the following:

D. Provide pipe accessories of same material and weight or class as pipe, with joining method indicated or recommended by manufacturer.

Add articles E - J as follows:

E. HDPE pipe may be used with specific approval by the City Engineer.
F. All fittings 4 inches and larger shall be ductile iron and must meet the requirements of NSF 61 and ANSI/AWWA C-153.
G. All PVC culinary water mains shall be blue in color, while secondary water shall be purple.
H. If authorized for use, HDPE pipe shall be marked with a colored stripe – blue for culinary water, purple for secondary water.
I. All tees, crosses, bends, etc. shall be Tyler Union, Star Fittings USA (made in the USA) or approved equal.
J. All MJ fittings shall include EBAA Iron MEGALUG joint restraints, Tyler TUFGrip, or approved equal.

2.3 VALVE BOX

Add articles D - F as follows:

D. Pressure irrigation valve boxes shall be Olympic VBU-8500 or D&L Supply M-9009
E. Pressure irrigation valve box lids shall be triangular and marked IRRIGATION
F. Valve box adapter shall center valve box on valve

2.6 TAPPING SADDLES

Add article E as follows:

E. CONTRACTOR provided tapping saddles (sizes 2-inches and smaller) shall be FORD FB202B or MUELLER double strap saddle, model BR2B.

2.7 SERVICE CONNECTIONS

Replace article B with the following:

B. IPS Polyethylene Pipe per 33 05 06 with compression type 200 psi fittings with inserts, in accordance with AWWA C800.

Add articles C, D and E as follows:

C. All pipe fittings, valves, or other components that will come into contact with drinking water shall conform to ANSI/NSF 61, and shall bear either the ANSI/NSF 61 or ANSI/NSF-pw certification mark.
D. Location of extended service laterals toward building shall be located via a 2x4 with a blue colored end visibly extended above adjacent surface.
E. Secondary water service lines shall be installed at uniform grades and alignments; and shall be free of low spots or adverse grades.

2.8 ACCESSORIES

Add articles I and J as follows:

I. Wires:
   1. General: Wire shall conform to applicable requirements of NEMA WC 3-80, WC 5-73 and WC 7-88.
   2. Tracer Wire:
      a. Tracer wire shall be required on all water lines (culinary and secondary) and shall be installed in the pipe zone directly above the pipe centerline and in contact with the pipe for all installations. Tracer wire shall be attached to the pipeline so as to minimize movement during the backfill process. Attachments shall be made by means of zip-ties or tape at 10-foot intervals. Tracer wire shall be extended to rise to the surface with each valve box installation. Do not loop wire in the valve box. S-curves in the tracer wire, equal to the diameter of the pipe, shall be installed at

each bell to allow the wire to be moved during tapping or other maintenance/repair work on the water line. When the pipe consists of a continuous material, lacking joints or bells, provide S-curves at 20-foot intervals. Tracer wire must also follow the service lateral into each meter box.

b. No. 10 AWG wire for tracer wire shall be single-conductor, solid copper wire with 600-volt, TW, THHN or HMWPE insulation.
c. All wire splices shall be knotted together, and then spliced together using a wire nut and DBY or DBR splice connector.
d. Tracer wire is to have a continuity test performed.

3. Wire Identification:
   a. Wire insulation color shall indicate the function of each wire and shall be as shown on the Drawings and as follows:
      i. Pipeline test wires:
         I. Water Pipeline: Blue
         II. Secondary Pipeline: Purple
         III. Other Pipeline: White or per ENGINEER request
         IV. Unprotected Pipe: Black
      ii. Casings: Orange
      iii. Anode lead wires: Black
      iv. Reference electrode wires: Yellow
      v. Tracer wires: Green

J. Warning Tape: The warning tape shall be in accordance with Section 33 05 20.

Add subpart 2.9 as follows:

2.9 BACKFLOW PREVENTION DEVICES

A. Refer to Herriman City's Amendments, Additions and Clarifications, Section 33 12 17.

Add subpart 2.10 as follows:

2.10 TAPPING SLEEVES

A. Tapping sleeves shall be used on all services greater than 2 inches. Ford FTSS or Romac SST111with stainless steel flanges shall be used.

PART 3 EXECUTION

3.3 LAYOUT

Add article D as follows:

D. Crossings between water mains and sewer mains shall have vertical clearance of at least 24 inches and water mains must be above sewer mains. Closer tolerances require a steel casing (see 3.4 of 33 05 23.35 for casing installation) in combinations with no mechanical joints or either utility within 10 feet horizontally of the crossing. Reinforcement shall be as per the current specifications.

3.4 INSTALLATION – PIPE AND FITTING

Add article I as follows:

I. Cut pipe ends square, ream pipe ends to full pipe diameter, remove burrs.
   1. Remove scale and dirt on inside and outside before assembly.
   2. Prepare pipe connections to equipment with flanges or mechanical joints.

3.6 INSTALLATION – VALVES AND VALVE BOXES

C. Valve Box

Add paragraph 4 as follows:

4. Install valve box adapter to center valve box on valve.

Add article D as follows:

D. Tracer Wire
   1. Tracer wire shall be installed on the outside of the valve box and inserted into the valve box six inches below the ground surface through a small hole drilled or cut into the side of the valve box by the contractor.

3.9 INSTALLATION – SERVICE LINE

B. Looping Existing Water Service: APWA Plan 542.

Revise paragraph 2 as follows:

2. Use liquid nitrogen to spot freeze active service lines. Pinching tools may also be used to close active service lines. If pinching tools are used, compression couplings must be installed over the area pinched.

Add articles D & E as follows:

D. OWNER, at OWNER's discretion, may exercise the option of installing service taps for the CONTRACTOR. In such case, CONTRACTOR must:
   1. Pay applicable connection fees to OWNER for the indicated size and location of tap to water main. Comply with all requirements of OWNER relating to excavation, traffic control, backfill and protection of the water main as related to the water main tap. OWNER, or its agents, will perform tap to water main.
   2. Install service lines as indicated or directed by WATER DEPARTMENT to meter. Additionally, extend Polyethylene pipe to 10 feet beyond sidewalk, and/or Right-of-Way (whichever is greater) toward the structure being serviced. Provide a 2x4x8 wooden stake at the end of the service line, visibly extended above the finished ground surface, having a blue colored painted end.
   3. When relocating water service lines, replace all pipes with polyethylene pipe per Section 33 05 06 and the standard water service detail. When existing meter and meter boxes are relocated, CONTRACTOR is required to reconnect the existing service line from both sides to the new meter box location.
E. Service lines shall be installed at uniform grades and alignments; and shall be free of low spots or adverse grades.

Add Article 3.16 as follows:

3.16 INSTALLATION – METER BOXES

A. Ensure all parts are in working order.
B. Where water lines are located below paved streets or public rights-of-way containing curbs, install meter boxes at the back of the curb. Such installation shall be in accessible locations beyond limits of walks and driveway approaches or other pedestrian and vehicular interference.

C. Where no curbing exists, install valves and meter boxes in accessible locations beyond limits of street surfacing, walks and driveway approaches or to other location with no pedestrian or vehicular interference.
D. Meters shall not be installed in any driveway, pedestrian sidewalk, hard surface or other location which may be a life or safety concern regarding access and maintenance of such meters. Meter boxes shall be located within the public ROW, or else an easement is required. Coordinate with City Engineering on exact placement.

Add subpart 3.17 as follows:

3.17 POLY WRAP

A. Unless otherwise directed by the ENGINEER, the pipe (ductile iron) and associated fittings and valves will be encased in an 8-mil polyethylene wrap. The wrap may be in either tube or sheet form and installed as described in Installation Guide for Ductile Iron Pipe by DIPRA. Locations for service taps must be prepared by fully tapping the location following re-excavation. All holes must be recovered and properly sealed prior to backfilling.
B. Wrapping for secondary water mains shall be purple.

Add subpart 3.18 as follows:

3.18 INSTALLATION – BACKFLOW PREVENTION DEVICES

A. Ensure all parts are in working order.
B. Set location of backflow prevention devices and boxes outside of sidewalk limits, driveway approaches and other pedestrian or vehicular interference.
C. Install backflow prevention devices in alignments enabling easy adjustments of mechanical controls and observation of performance gauges. Install backflow prevention devices in accordance with instructions and tolerances specified by the manufacturer per the directive of the City Certified back flow technician.

SECTION 33 12 16
WATER VALVES

PART 2 PRODUCTS

2.1 VALVES - GENERAL

Add articles I - M as follows:

I. All valves 4-inches and larger shall be ductile iron and must meet the requirements of NSF 61 and ANSI/AWWA C-153. *See Standard Plan No. CW-08*.
J. MJ valve connection joint restraints shall be as noted in the Culinary Water and Secondary Water Parts Lists or approved equal.
K. Manufacturer's name and pressure rating shall be marked on the valve body.
L. If isolation valves are located in an undeveloped area, a vertical valve marker shall be required.
M. All valves shall be epoxy coated with NSF compliant paint. Safety blue for culinary, and safety purple for secondary.

2.2 VALVES – GATE VALVES

Add articles D and E as follows:

D. All gate valves shall be resilient seated and rated for 250 psi.
E. Gate Valves 3 inches and larger and valve box
    1. Product: As noted in the Culinary Water and Secondary Water Parts Lists or accepted equal.

2.3 VALVES – BUTTERFLY VALVES

Add articles E – I as follows:

E. All butterfly valves shall be rated for 250 psi.
F. Butterfly valves shall have resilient replacement seat, mechanical joint or flanged ends as indicated, manual worm gear operator, and cast-iron valve box where required.
G. Underground manual operators shall be totally enclosed, factory grease packed and sealed, bronze worm gear operators with self-locking gearing; stops shall be provided to prevent over travel of valve disc.

H. Valve operators shall be geared to close valves slowly. Number of turns to close valve from fully open position shall be: 52 for 14-inch thru 16-inch valves, and 76 for 18-inch through 24-inch valves. Closing times for larger valves shall be as approved by the City Engineer.
I. Butterfly valves and valve box shall be as noted in the Culinary Water and Secondary Water Parts Lists or accepted equal.

2.5 VALVES – CHECK VALVES

Add articles D – F as follows:

D. 2-inch to 24-inch Swing Check Valves shall be as noted in the Culinary Water and Secondary Water Parts Lists or accepted equal.
E. 2-inch to 24-inch Globe Valves shall be as noted in the Culinary Water and Secondary Water Parts Lists.
F. All control valves shall be epoxy coated both inside and outside.

2.9 VALVES – CONTROL VALVES

Add article H as follows:

H. All control valves shall be as noted in the Culinary Water and Secondary Water Parts Lists, epoxy coated both inside and outside. All piloting shall be stainless steel.

Add subpart 2.10 as follows:

2.10 VALVES – COMBINATION VALVES

A. Combination valves shall be as noted in the Culinary Water and Secondary Water Parts Lists or approved equal.
B. Air vacuum valves or air release valves are not allowed without approval from the City Engineer.

Add subpart 2.11 as follows:

2.11 VALVES – BALL VALVES

A. Use only in sizes 2 inches and smaller.
B. PVC body, PTFF seat seal, PVC ball and ABS handle.
C. Model is to be approved by Herriman City.

Add subpart 2.12 as follows:

2.12 VALVES – CORPORATION STOPS

A. Shall be type for connecting to copper or polyethylene pipe; As noted in the Culinary Water and Secondary Water Parts Lists.

Add Section 33 12 17 as follows:

SECTION 33 12 17
BACKFLOW PREVENTION DEVICE OR ASSEMBLY

PART 1 GENERAL

1.1 SECTION INCLUDES

A. Air gap, reduced pressure assembly, double check valve assembly, pressure vacuum breaker and atmospheric vacuum breaker backpressure and back siphon prevention device assemblies and their installation.

1.2 REQUIREMENTS

A. All backpressure and back siphon prevention devices or assemblies shall ensure that the requirements of federal, state, and local agencies pertaining to the quality of water delivered to consumers are met.
B. Except machined surfaces, coat all items exposed to atmosphere with epoxy paint. Color to be selected by ENGINEER.
C. Concrete: Class 4000 per APWA Section 03 30 04. Place per APWA Section 03 30 10. Cure per APWA Section 03 39 00.
D. All backflow prevention assemblies shall be in-line serviceable, in-line testable and have certification through third party certifying agencies. See the Herriman City cross connection control ordinance for additional details. Backflow Prevention Devices shall be in accordance with *Standard Plan No.'s CW-03, CW-04, CW-05, and CW-06.*

1.3 REFERENCES

A. AWWA M14: AWWA Recommended Practice for Backflow Prevention and Cross-Connection Control.
    1. AWWA C511-89: AWWA Standard for Reduced Pressure Principle Backflow Prevention Assembly.
    2. AWWA C511-92: AWWA Standard for Reduced Pressure Backflow Prevention Assembly.
    3. AWWA C510-92: AWWA Standard for Double Check Valve Backflow Prevention Assembly.
    4. Control Manual, Accepted Procedure and Practice, Sixth Edition, Cross Connection Control Committee, Pacific Northwest Section – AWWA, December 1995.

5. Cross Connection Control Manual, US Environmental Protection Agency, June 1989.

1.4 SUBMITTALS

A. Provide technical information as required for evaluating the quality of the backflow prevention device or assembly and its components. As a minimum, include dimensions, weights, materials lists and operation charts.

PART 2 PRODUCTS

2.1 AIR GAP

A. Use where there is a connection to any facility using a dangerous or toxic substance in toxic concentrations. The air gap shall be located as close as practicable to the service cock. All piping between the service cock and receiving tank shall be entirely visible.
B. Physical separation between water supply outlet and flood level rim of the fixture or assembly into which the outlet discharges shall be at least twice the diameter of the water supply outlet but never less than 1-inch.
C. Where the air gap is within two (2) pipe diameters (horizontal measurement) of a wall or vertical surface, the air gap shall be increased to a minimum of 1.5-inches or to three times the incoming pip diameter, whichever is greater.
D. Any structure which bridges the air gap causing a bypass renders the system ineffective and shall not be permitted.

2.2 REDUCED-PRESSURE BACKFLOW PREVENTION ASSEMBLY

A. Use where cross connections are known or probably will exist which cannot be eliminated and where the degree of severity warrants more than a double check valve.
B. Assembly consists of two independently acting, approved check valves with a hydraulically operating, mechanically independent pressure differential relief valve located between the upstream and downstream check valves. Test cocks should be appropriately located for testing and monitoring of the assembly.
C. The relief valve shall maintain a minimum pressure in the zone between the upstream check valve and the downstream check valve of 2-psi lower than the supply (upstream) pressure.
D. If the supply (upstream) pressure falls below 2-psi, the relief valve shall discharge to the atmosphere.

2.3 DOUBLE CHECK VALVE ASSEMBLY

A. Use where there is an auxiliary water source to the premises handled in separate piping systems. Also, use where a cross connection possibly exists where the substance would be objectionable, but not necessarily hazardous to health.
B. Assembly consists of two internally loaded check valves, either spring loaded or internally weighted, installed as a unit between two shutoff valves. Test cocks should be appropriately located for testing and monitoring of the assembly. The assembly is located between two tightly closing resilient seated shutoff valves.

2.4 DUAL CHECK VALVE ASSEMBLY

A. Install as a secondary protection method of the drinking water system, within the meter yoke of non-industrial, low hazard connections.
B. Assembly consists of two internally loaded, independently operating check valves, either spring loaded or internally weighted, installed as a unit between two shutoff valves. No test cocks are part of the assembly.

2.5 PRESSURE VACUUM BREAKER

A. Use only where cross connection is introduced through backsiphonage. This assembly shall not be used in systems where there can be backpressure.
B. Assembly consists of an independently operating internally loaded check valve and an independently operating loaded air inlet valve located on the discharge side of the check valve. Test cocks should be appropriately located for testing and monitoring of the assembly. The assembly is located between two tightly closing resilient seated shutoff valves.
C. The assembly must be installed at least 12-inches above the highest outlet or tank.

2.6 ATMOSPHERIC VACUUM BREAKER

A. Use only where cross connection is introduced through backsiphonage. This assembly shall not be used in systems where there can be backpressure. No shutoff valves may be placed downstream of the assembly.
A. Assembly consists of a float check, a check seat, and an air inlet port. An upstream shutoff valve may be an integral part of the assembly.
C. The assembly must be installed at least 6-inches above the highest outlet or tank.

PART 3 EXECUTION

3.1 INSTALLATION – AIR GAP

A. The assembly is not to be installed in a pit below ground level. Semi buried pits are acceptable if the assembly is installed above the ground or the maximum flood level.
B. Assembly shall be located and monitored in such a way as to prohibit bridging of the air gap resulting in cross connection and possible backflow.
C. In any high hazard installation, the air gap shall be inspected within 10 days after initial installation and at least annually thereafter by a certified backflow technician.

3.2 INSTALLATION – REDUCED PRESSURE BACKFLOW PREVENTION ASSEMBLY

A. The assembly shall be installed with adequate space to facilitate maintenance and testing. Ideally, the installation should not require platforms, ladders, or lifts for access.
B. Adequate clearance from the floor, ceiling, and walls must be provided to facilitate the removal of the relief valve and/or check valves.
C. The assembly shall be designed to function properly under projected extreme temperature ranges.
D. The assembly shall not be installed in a pit below ground level. Semi-buried pits are acceptable if the assembly is installed above the ground or the maximum flood level with an approved air gap between the relief valve port and the daylight drain. The bottom of the assembly shall be a minimum of 12-inches above the ground or floor.
E. All reduced pressure backflow prevention assemblies shall be installed in the horizontal alignment.
F. Thoroughly flush the lines before installing the assembly.
G. The relief valve on the assembly shall not be directly connected to any waste disposal line, including sanitary sewer, storm drains, or vents.

3.3 INSTALLATION – DOUBLE CHECK VALVE ASSEMBLY

A. The assembly shall be installed with adequate space to facilitate maintenance and testing and should have free access without the use of platforms, ladders, or lifts.

B. The assembly should not be installed below ground level unless provided with adequate drainage to maintain a dry location. Where an assembly must be installed in a location that is susceptible to flooding, the test cocks shall be plugged.
C. Thoroughly flush the lines before installing the assembly.
D. The assembly shall be installed in a horizontal position unless otherwise directed by the ENGINEER.

3.4 INSTALLATION – DUAL CHECK VALVE DEVICE

A. The device shall be installed with adequate space to facilitate maintenance and testing and should have free access without the use of platforms, ladders, or lifts.
B. The device should not be installed below ground level unless provided with adequate drainage to maintain a dry location.
C. Thoroughly flush the lines before installing the assembly.
D. The device shall be installed in a horizontal position unless otherwise directed by the ENGINEER.

3.5 INSTALLATION – PRESSURE VACUUM BREAKER

A. The assembly shall be installed at least 12-inches above all downstream piping and the highest fixture flood level rim, outlet, or highest point of water use.
B. The assembly shall be installed in a vertical position with adequate space to facilitate maintenance and testing.
C. The assembly shall not be installed in a vent hood or where toxic or objectionable fumes could enter and contaminate the potable water piping.
D. The assembly shall be designed to function properly under projected extreme temperature ranges.
E. The assembly shall not be installed below ground in a vault or pit.

3.6 INSTALLATION – ATMOSPHERIC VACUUM BREAKER

A. The device shall not be installed in applications where it will be in continuous operation for more than 12 hours.
B. The device shall be installed downstream of the last shutoff valve in a system, such that the discharge side is exposed to the atmosphere.
C. The device shall be installed a minimum of 6-inches above all downstream piping and the highest outlet or flood level rim.

D. The device shall not be installed in a vent hood or where toxic or objectionable fumes could enter and contaminate the potable water piping. The device shall be installed in a visible location for maintenance.
E. The device shall be designed to function properly under projected extreme temperature ranges.

3.7 TESTING AND START-UP

A. All backflow prevention assemblies shall be tested within 10 days of initial use by a licensed backflow device tester and the report presented to the City's Cross Connection Control Administrator.
B. All backflow prevention assemblies are to be tested annually by a certified tester and repairs or maintenance completed as needed. All test reports must be presented to the City's Cross Connection Control Administrator.

Add Section 33 12 18 as follows:

SECTION 33 12 18
UNDERGROUND PACKAGED PRESSURE REDUCING STATION

PART 1 PRODUCTS

1.1 SCOPE OF WORK

A. The contractor shall furnish and install one (1) factory built, factory delivered, underground pressure reducing station, with all necessary internal piping, valves, controls and other necessary appurtenances as shown on the plans and specified herein. The underground pressure reducing station shall be complete when delivered and will not require internal contractor construction except to install the power service through the service conduit provided for that purpose.

B. The underground pressure reducing station shall be manufactured by Engineered Fluid, Inc. (EFI), Centralia, Illinois, represented by Mr. Chris Horneck of Hydrosol, telephone 303-692-0825, or approved equal.

1.2 QUALITY ASSURANCE

A. The equipment and materials covered by these specifications are intended to be standard equipment of proven reliability and as manufactured by a reputable manufacturer having experience in the production of such equipment. The equipment furnished shall be designed, constructed, and installed in accordance with the best practices and methods and shall operate satisfactorily when installed as shown on the contract drawings and operated per manufacturer's recommendations.

B. It is intended that the manufacturer of the selected equipment shall be a business regularly engaged in the manufacture, assembly, construction, start-up and maintenance of water distribution equipment of the type required for this project. The manufacturer shall have at least ten (10) years of successful experience in providing stations of the type, design, function and quality as required for this project. As such, the station manufacturer shall be required to affix an **UNDERWRITERS LABORATORIES (UL) LABEL** attesting to the compliance of that assembled equipment under the **PACKAGED PUMPING SYSTEMS** (QCZJ) UL Listing Category. This label shall be inclusive of the entire station with enclosure so as to demonstrate compliance with the National Electrical Code requirements for working clearances and wiring

procedures. **Equipment manufactured without this third-party certification label or equipment manufactured by an outside source or "brokered equipment" defined as systems not assembled on the premises of the named manufacturer by that company's employees WILL NOT be allowed.**

1.3 SUBMITTAL

A. Equipment submittals shall be submitted electronically. The submittal shall contain full size drawings, size 24" x 36"; one (1) each covering the pressure reducing station and the electrical control schematic. The pressure reducing station drawing shall be specific to this project, in at least three (3) different views, be to scale and illustrate the National Electrical Code (NEC) clearances per Section 110-26 of the Code. The submittal will be complete with data sheets covering all individual components that make up the pressure reducing station and the UL file number under which the manufacturer is listed, service department personnel statement as detailed in the specifications and be complete with the manufacturer's formal warranty policy. **The submittal shall be complete with a full-size photocopy of the manufacturer's combination UL/manufacturer logo Packaged Pumping Systems label.**

B. Two (2) submittal reviews of this item will be accomplished at no cost to the submitting contractor. However, all subsequent reviews will be charged to the submitting contractor at the design engineer's standard hourly billing rate.

PART 2 PRODUCTS

2.1 EQUIPMENT CAPSULE

A. The equipment capsule size as shown on the drawings for this project is appropriate for National Standard mandated clearances and for proper clearances above, below and around equipment to provide for safe servicing, removal and reinstallation of that equipment.

B. Likewise, the entrance manway shall be sized to provide for the eventual removal and replacement of any component within the station without altering the station to accomplish that task.

C. The drawing for this equipment illustrates centerline and clearance/ maintenance dimensions about major equipment items. These dimensions are minimums. Dimensions less than those shown "**will not**" be accepted.

D. EQUIPMENT CAPSULE - CONSTRUCTION

1. The plate steel employed throughout the capsule shall be 1/4" minimum thickness and meet or exceed the requirements for ASTM A-36. The

structural shapes employed shall meet or exceed the requirements for ASTM A-36. Field welding to complete the capsule or attach the entrance hatch will not be allowed.

2. The plate forming the top & bottom of the capsule shall be cold formed prior to assembly so as to form a **lap joint** with the side wall. The **lap joint** shall be continuously welded on the interior by hand & the exterior by machine to form an airtight seal. The lower side wall continuous weld shall be an average 1/2 inch above the capsule floor, which removes the lower weld from incidental water impingement. **Capsules without lap joints will not be accepted.**
3. **A lap joint detail shall be shown on the submittal drawings**.
4. The **lap joint** shall be in full conformance with Steel Tank Institute (STI) P-3 specifications Section 4.2.6 and Underwriters Laboratories (UL) 58 specifications for steel vessels in buried service, and the American Welding Society (AWS) Structural Welding Code, Section 9.10, for dynamically loaded structures.
5. Any ferrous metal device passing through the capsule wall will be welded fully along its circumference or length on both sides of the capsule wall.
6. The top and bottom of the equipment capsule shall be supported and reinforced by a combination of standard structural shapes of the sizes and weights as shown on the plans for this item to provide H20 capsule loading.
7. Four (4) or more **lifting plates** of 3/8 inch minimum thickness shall be placed about the perimeter of the capsule to facilitate the lifting and handling of the station.
8. **Interior lifting eyes** shall be placed over each piece of equipment in excess of 60 pounds in weight.
9. The capsule will be complete with a sump. The sump shall be a minimum of eighteen (18) inches in diameter x eight (8) inches deep; the sump shall be provided with a four (4) inch plugged outlet for gravity outflow as required.

2.2 TANK PENETRATION SLEEVE

A. Tank wall penetrations for all pipes with interior epoxy fusion bonded coating shall include a tank penetration sleeve of at least 1/2-inch thickness. This sleeve shall be attached to the pipes prior to epoxy coating. The sleeve shall prevent destruction of the pipe coating at weld locations. This sleeve shall be shown on submittal drawings.

2.3 ENTRANCE MANWAY

A. The equipment capsule entrance manway shall be a prefabricated ferrous casting with a minimum clear opening of thirty-six (36) inches. The access manway shall be designed when installed to be flush mounted at finished grade so that vehicular or pedestrian traffic can pass smoothly over the cover. Metal used in the manufacture of castings shall conform to ASTM A48-83 Class 35B for Gray Iron. All castings shall be manufactured true to pattern. Component parts shall fit together to prevent rocking and rattling. The access manway shall have a gasket seal and bolted lid for water resistance.

THE ACCESS MANWAY SHALL BE AN EJ ERGO XL WITH MECHACNICAL STRUT.

B. The entrance manway shall have a minimum clear inside opening of thirty (30) inches by fifty-four (54″) inches. The scuttle cover shall be made of 11-gauge aluminum. The scuttle cover shall be insulated with a minimum of one (1) inch fiberglass insulation covered and protected by an 18-gauge aluminum liner. The entry lock shall be flush mounted in the scuttle riser in position to be protected from the elements by the cover skirt as detailed on Bilco Drawing 6184. The lock shall be of the pin tumbler type, dead bolt with an inside safety release. Two (2) keys will be provided on a key ring complete with the manufacturer's identification. No locking devices or other penetrations of the cover shall be allowed. The hatch shall be bolted to the station top structure or hatch extension. Non-shrink closed cell foam gasket shall be used to make positive seal between the top of the hatch extension and the bottom flange on the hatch.

THE ENTRANCE MANWAY SHALL BE BILCO MODEL MNB 50 ROOF SCUTTLE

C. There shall be provided an aluminum, flush-to-grade “sidewalk” hatch of nominal size 36″ by 36″, single leaf configuration, rated for 300 PSF loading. The hatch frame shall be bolted to the upper flange of the capsule hatch extension. To accommodate shipping the hatch extension and hatch may require field placed and bolted by the installing contractor. The hatch shall be constructed of one-quarter inch (1/4″) diamond plate and the frame shall be constructed of one-quarter inch (1/4″) aluminum plate and be welded together. The hatch shall include a lifting handle, lifting mechanism and latch and be

lockable. The lock shall be of the pin tumbler type, dead bolt with an inside safety release. Two (2) Primus style keys will be provided on a key ring complete with the manufacturer's identification. The hatch shall be suitable to have concrete poured around it up to the elevation of the top face of the hatch.

THE HATCH SHALL BE BILCO MODEL J-4AL

2.4 ACCESS LADDER

A. An all-aluminum access ladder will be provided. The ladder shall meet UL approval and OSHA qualifications under the Type I, Heavy Duty Specifications. The ladder will have 1-1/4" diameter, tempered, serrated rungs with 3" x 1-1/8" full I-Beam side rails. The uppermost ends of the side rails will be protected by plastic caps bolted into place. The complete access ladder will be bolted into place, at a minimum of two (2) points both top and bottom, so as to be easily removable to facilitate equipment maintenance.
B. A Bilco Model LU-1 ladder-up safety post shall be installed on the vertical centerline of the entrance ladder.

2.5 SAFETY MATTING

A. The capsule walkway areas (that space from the entrance ladder to the power panel and the entire NEC clearance area) shall be covered with a Nyracord industrial safety matting. The mat shall be a heavy duty, 1/2-inch minimum thickness Nyracord compound (rubber blend with fiber reinforcement) of open slot design with a ribbed safety pattern (ribbed in two directions) to promote sure footing. The underside of the safety mat shall also be ribbed (in one direction only) to permit aeration and drainage. The safety mat shall not be glued to the floor surface.

2.6 COATINGS – CORROSION PROTECTION

All interior and exterior surfaces of the exposed steel structure, transmission piping, and fittings shall be gritblasted equal to commercial blast cleaning (SSPC SP6). Following fabrication all exposed surfaces of the station, interior and exterior, shall be coated according to the following requirements.

A. Weldment Prime Coating
All weldments will be pretreated by hand to provide additional corrosion protection using the same product as the base coat. Following the pretreatment full coating application shall take place.

B. Base Coating
The base coating shall take place immediately after surface preparation. The protective coating shall consist of a two-component, high solids, high build, fast drying epoxy system for protection and finishing of steel and having excellent corrosion resistant properties. The epoxy system shall be self-priming and require no intermediate coatings.

C. Top Coating
Following the base coating application, a full finish coating application shall take place. The protective coating shall consist of a two-component, high solids, high build, fast drying epoxy system for protection and finishing of steel and having excellent corrosion resistant properties. The epoxy system shall be self-priming and require no intermediate coatings. The base and finish coats shall provide a total dry mil thickness of 8.0 mils.

D. Post-Assembly Coating
Following assembly and just prior to shipping, there shall take place a thorough cleaning of the floor of the station followed by a rolled-on coating of the two-part epoxy coating to cover over any scuffing or scaring that might have occurred during assembly.

E. Floor Coating and Corrosion Protection System
1. The exposed surfaces of the structural steel base shall have a non-skid coating of a two-component, 100% high performance aromatic polyurea spray elastomer system with zero VOC (Volatile Organic Compounds), 100% solid. The coating shall offer outstanding performance and superior elastomeric protection for various substrates. The coating shall be designed as a user-friendly product for moisture insensitive applications because of its pure polyurea chemistry and offer exceptional adhesion properties for properly prepared substrates. The high-performance formulation shall produce an excellent skin formation for chemical resistance and moisture protection.
2. Both the Iso "A" Side and Resin "B" Side shall be preconditioned between 70-90°F before application. Iso "A" and Polyol "B" components must be pumped by low-pressure transfer pumps to a suitable high-pressure proportional pumping system.
3. Temperature Settings
   a. Iso "A" Block Heater: .....140°F - 160°F

b. Resin "B" Block Heater: .....140°F - 160°F
c. Hoses (Iso and Polyol).....140°F - 150°F

3. Hydraulic Pressure Setting
   a. Equipment Hydraulic Pressure: .....2,000 - 2,500 PSI
4. Chemical Technical Data
   a. Mix Ratio by Volume: 1A:1B
   b. Gel Time: .....6-9 Sec
   c. Tack Free Time: .....9-12 Sec
   d. Viscosity (cps) @ 77°F
      "A" Iso Side:.....1,000±100
      "B" Resin Side: .....370±50
   e. Material Density (lbs/gal) @ 77°F "A"
      "A" Iso Side: .....9.5 lbs/gal
      "B" Resin Side:.....8.4 lbs/gal.
5. Basic Physical Properties
   a. All tests are performed by laboratories that are ISO 17025 certified and accredited by the American Association for Laboratory Accreditation (A2LA).
   b. Comply with the following testing requirements

Test Name	Test Methods	Value
Hardness Shore D	ASTM D2240	60±1
Coefficient of Friction	ASTM D1894	
Static		0.305
Kinetic		0.127
Dielectric Const.	ASTM D150	3.6
Dissipation Factor	ASTM D150	0.031
Volume Resistance	ASTM D257	2.3x1014 ohm cm
Elongation	ASTM D412	162%
Flexural Strength	ASTM D790	2,630 PSI
Flexural Modulus	ASTM D790	0.056 MSI
Fungus Test	MIL-STD 810F	Pass
Pull-off Test–Adhesion	ASTM C297	
To Metal – No Primer		1,800 PSI
To Metal – XPM Primer		1,910 PSI
To Metal – LXSF515 Primer		1,870 PSI
Taber Abrasion	ASTM D4060	0.06980 (gm
		Loss/1000 cycles)

Test Name	Test Methods	Value
Tear Strength	ASTM D624	783 ppi
Tensile Strength	ASTM D412	3,432 PSI
Water Vapor Trans.	ASTM E96	0.499 Grains/Hr Sq.Ft.

c. The chemical resistance testing for the coating shall be per ASTM D543 for immersion in fluids methods.

2.7 CATHODIC PROTECTION

A. The station manufacturer shall furnish two (2) seventeen-pound packaged magnesium anodes for cathodic protection. The anodes shall be buried equally spaced around the station and connected by heavy copper wire to lugs on the station provided for that purpose.
B. An anode test station shall be furnished consisting of individual pushbutton switches for each of the magnesium anodes installed around the perimeter of the steel capsule. The test station pushbutton switches will allow current to flow between the respective anode and the steel capsule, passing through a test station milliammeter mounted on the test station door so that when the pushbutton is held in the depressed position, the operator can observe needle deflection or lack thereof. The milliammeter shall have a range of 0 30 mA. The wire lead for each anode shall enter the capsule through a watertight, compression fitting in the capsule or hatch extension wall. The separate leads shall be run in conduit to the test station mounted inside the capsule. A station capsule cathodic system lug shall be provided as required to complete the system circuit to the anodes.

2.8 PIPING

A. Piping shall be steel and conform to material specification ASTM A-53(CW) for nominal pipe size four (4) inch and smaller and ASTM A-53(ERW) Grade B for nominal pipe size five (5) inches and larger. Steel butt-welding fittings shall conform to material specification ASTM A-234 Grade WPB and to the dimensions and tolerances of ANSI Standards B16.9 and B16.28, respectively.
B. Forged steel flanges shall conform to material specification ASTM A-105 Class 60 and/or ASTM A-181 for carbon steel forgings and to the dimensions and tolerances of ANSI Standards B16.5 as amended in 1992 for Class 150 and Class 300 flanges.

C. The piping sizes shall be as shown on the drawing.
   Size 10 inch and below - Schedule 40
   Size 12 inch and above - Standard weight (.375" wall)
D. All pipe welds shall be performed by certified welders employed by the station manufacturer. As part of the equipment submittal, the station manufacturer shall provide copies of the welding certificates of the employees who are to perform the pipe welds.
E. All piping surfaces shall be prepared by sandblasting, or other abrasive blasting, prior to any welds taking place. Piping of 5" diameter and smaller may be cut by saw. Piping of 6" diameter and larger shall be bevel cut, and Oxyfuel or Plasma-arc cutting techniques shall be used to assure and facilitate bevel pipe cuts. No saw cuts or other form of abrasive cut-offs are allowed on 6" and larger diameter pipe.
F. In all cases, short circuit transfer, spray transfer or pulse-arc transfer modes of the gas metal arc welding process shall be applied semi-automatically. When utilizing the short circuit mode, shielding gas consisting of 50% carbon dioxide and 50% argon gas shall be used. When utilizing the spray or pulse-arc transfer modes, a shielding gas consisting of 5% carbon dioxide and 95% argon shall be used. In all cases, welding wire with a minimum tensile strength of 70,000 psi shall be employed. All flange welds and butt welds of equal size pipe shall be a single continuous nonstop weld around the complete circumference of the pipe. Whenever possible, vertical up weld passes will be applied to all pipe welds. No vertical down weld passes will be allowed. Completed welding assemblies shall create no internal obstruction, restriction or create any unintended sources of water deflection.
G. Piping of six (6) inch diameter and larger shall require a minimum of two (2) weld passes to complete each weld. The first pass, or root pass, shall be applied at the bottom of the bevel cut using the short circuit transfer welding mode, and the second pass, or cap pass, shall be applied over the root pass using the spray or pulse arc transfer welding modes to insure that at a minimum the total weld thickness shall be equal to thinnest of the two pieces being welded together.

2.9 PIPE SUPPORTS

A. Pipe supports by minimum sizing for:
   1. 4" and smaller piping shall be 2" x 2" x 3/16" wall rectangular tubing;
   2. 6" through 12" piping shall be 3" x 3" x 1/4" wall rectangular tubing;
   3. 14" through 24" piping shall be 4" x 4" x 1/4" wall rectangular tubing and,

4. 6" and larger piping shall be provided with "kick" bracing projecting fully from the underside of the pipe to the floor at an angle of no less than 15E from vertical out at a right angle to the run of the pipe being supported. These "kick" braces shall be in addition to the vertical pipe supports called out above.

B. Pipe supports are to be fully welded at both end points to the pipe and steel floor where required.

C. **Simple pipe stands made of pipe welded only at the floor and upholding a yoke or bracket with or without a threaded jack bolt or a U-bolt are not acceptable, as no lateral or transverse support is provided.**

2.10 FUSION BONDED EPOXY COATING - STEEL PIPING

A. The internal surfaces of piping to be fusion bonded coated shall be grit blasted to an SP-10 finish with the finish profile required by the coating material manufacturer. The internal, wetted surfaces of the steel transmission piping shall have applied to it a Fusion Bonded Epoxy Coating on the interior pipe surface. The coating shall be applied and meet the testing requirements of Table 1 and Table 2, with the exception of Table 2 section 7 per AWWA C-213. The powder coating product shall be National Sanitation Foundation (NSF) Standard 61 certified material.

B. Prior to shipment of the station, the station manufacturer shall provide in writing to the Engineer certification that the fusion bonded epoxy coating has been applied to all internal surfaces of the steel piping using the proper method. Said certification shall show under the station manufacturer's letterhead:
   1. Date of application;
   2. Material manufacturer and product designation including a product data sheet for the coating;
   3. Applier of the fusion bonded coating, name, address and phone number;
   4. Notarized signature of an officer of the station manufacturing company stating the fusion bonded epoxy coating was applied to AWWA Standard C213-91 or the latest revision.

2.11 SERVICE CONNECTIONS ON INTERNAL PIPING

A. All plumbed devices within the station eventually requiring service, such as control valves, and like equipment, shall be easily removed from the piping by the presence of appropriately placed and sufficient quantity of adaptors and

couplings as shown on the drawings; no less than the quantity of couplings and adaptors shown shall be allowed.

2.12 RESTRAINING POINTS

A. The main inlet and outlet piping to the station shall each be provided with two (2) or four (4) restraining points as welded on "eyes" or similar device welded to the capsule or framing to facilitate the attachment of joint restraint tie rods or other device to be used in retarding any pipe movement at the connections.

2.13 COMPRESSION COUPLINGS

A. The pressure reducing station piping shall include a compression type, flexible coupling to prevent binding and facilitate removal of associated equipment where shown on the plans for this item. In lieu of a compression coupling, a Uni-Flange or a flanged coupling adapter (FCA) may be used.
B. All compression couplings, Uni-Flanges, flanged coupling adapters (FCA), and flexible connectors/ expansion joints shall include a minimum of two (2) control joint rods with appropriate restraining points.

2.14 COMBINATION PRESSURE GAUGES

A. Three (3) total gauges to be installed:
One (1) on the main inlet and one on each control valve (2) between the control valve and the outlet isolating valve.
B. Combination pressure gauges shall be glycerin filled with a built-in pressure snubber and have 4-1/2-inch minimum diameter faces and be turret style, black phenolic case with clear glass face. The movement shall be rotary, of 400 Series stainless steel with Teflon coated pinion gear and segment. The gauge shall be bottom connected and accept a 1/4" NPT female thread. Combination pressure gauge range and scale graduations shall be in psi and feet of water as follows:

INLET PRESSURE - 0 to 200 psi, 20 psi figure intervals, with graduating marks every 2 psi (0-460 feet).

OUTLET PRESSURE - 0 to 100 psi, 10 psi figure intervals, with graduating marks every 1 psi (0-230 feet).

C. **All gauges will be panel mounted** off the pipeline and be flexible connected to their respective sensing point. The gauge trim tubing shall be complete with

both isolating and vent valves and the tubing shall be so arranged as to easily vent air and facilitate gauge removal. Gauges mounted directly to the pipeline or at the sensing point **will not** be accepted.

GAUGES SHALL BE WIKA MODEL 212.34.

2.15 SAMPLE TAP

A. A single, right angle outlet, smooth nose, brass sample tap shall be affixed to the manual vent ball valve on the inlet pressure gauge assembly.

2.16 HOSE BIBB WITH VACUUM BREAKER

A. There shall be provided a standard hose bibb with valve and vacuum breaker installed on each control valve run between the control valve and the outlet isolating valve. The hose bibb connection shall be through a pressure regulator if the header pressure would exceed 60 psi.

2.17 BUTTERFLY VALVES

A. Valve body shall be wafer style and meet ANSI Class 125/150 flange standards. Metal reinforced dovetail seat shall ensure drop tight, bi-directional shutoff and shall be field replaceable. The stem shall be one piece. The disc and stem shall be connected by a stainless-steel torque plug which shall provide positive engagement. The valve shall have upper and lower RTFE inboard stem bearings, isolated from the line media, and a heavy-duty upper stem bushing.
B. The valve body shall be cast iron; aluminum bronze disc; stainless steel stem; EPDM seat; acetal upper stem bushing; BUNA-N V-cup stem seal.
C. Valve sized six (6) inches and smaller shall be equipped with lever operator and 10-degree increment throttling plate. Valve sized eight (8) inches and larger shall be equipped with a weather-proof, heavy-duty, gear operator complete with a position indicator.

BUTTERFLY VALVES SHALL BE KEYSTONE MODEL 221-784.

2.18 PRESSURE REDUCING VALVE

A. Two (2) pressure reducing valves shall be provided as sized and shown on the plan sheet. Each water pressure reducing valve shall be a pilot controlled, hydraulically operated, diaphragm actuated, globe pattern valve. The valve in operation shall function to maintain a constant downstream pressure

regardless of varying inlet head. The main valve shall be single seated and have a removable seat insert. The disc shall contain a replaceable, resilient rubber seat that will guarantee drop tight shut off when closed against the seat insert.

B. Seat trim shall be 303 stainless steel, and an X101 valve position indicator shall be provided. The valve shall be sized as shown on the plan and be globe pattern, flanged to meet ANSI Class 125.

C. The control pilot shall be a direct acting, adjustable, spring-loaded, normally open diaphragm valve designed to permit main valve opening when the reduced outlet pressure is less than the pilot set point. Control valve trim tubing and fittings shall be stainless steel. Fittings must be compression type – flare type is not acceptable. The control pilot shall be bronze with stainless steel trim. The control pilot shall be easily adjustable 25 psi above or below the set point.

THE REDUCING VALVE SHALL BE CLA-VAL MODEL 90G-01ABC, with X101.

PART 3 EXECUTION

3.1 PRESSURE TESTING

A. When the station plumbing is completed, the pressure piping within the station, including valves, control valves, fittings, connections as make up the entire system shall be hydrostatically tested at a pressure of 100 psi or a pressure equal to the lowest test pressure rating of the equipment within the tested system, whichever is greater pressure. The test pressure shall be applied for a minimum of 20 minutes, during which time all joints, connections & seams shall be checked for leaking. Any deficiencies found shall be repaired and the system shall be retested.

B. **The results of this testing shall be transmitted in writing to the Engineer prior to shipment of the station and shall note test pressure, time at full pressure and be signed by the Quality Control Manager or test technician.**

3.2 CONFORMANCE TO BASIC ELECTRICAL STANDARDS

A. The manufacturer of electrical power panels and their mounting and installation shall be done in strict accordance with the requirements of Underwriters Laboratories (UL) and the National Electrical Code (NEC) latest revision so as to afford a measure of security as to the ability of the eventual owner to safely operate the equipment. **No exceptions to the requirements of these codes and standards will be allowed; failure to meet these**

requirements will be cause to remove the equipment and correct the violation.

3.3 U.L. LISTING

A. All service entrance and power panels shall be constructed and installed in strict accordance with **Underwriters Laboratories (UL) Standard 508** "**Industrial Control Equipment.**" The UL label shall also include an **SE** "**Service Entrance**" rating stating that the main power panel is suitable for use as service entrance equipment. The panels shall be shop inspected by UL or constructed in a UL recognized facility. All panels shall bear a serialized UL label indicating acceptance under Standard 508 and under Enclosed Industrial Control Panel or Service Equipment Panel. In addition, a photocopy of the UL labels for this specific project shall be transmitted to both the project engineer and the contractor for installation within their permanent project files, **prior to shipment of the equipment covered under these specifications.**

3.4 E.T.L. LISTING

A. All power panels shall be E.T.L. Listed by Interek Testing Services (ITS) under Category 4 - Industrial Control Equipment. Each completed panel shall bear an E.T.L. listing label. The listing label shall include the station manufacturer's name, address and telephone number. The station manufacturer shall have quarterly inspections performed by ITS at the manufacturer's facilities to ensure that the products being listed comply with the report and procedural guide for that product.

3.5 EQUIPMENT GROUNDING

A. Each electrical equipment item in the station shall be properly grounded per Section 250 of the National Electrical Code. Items to be grounded include, but are not limited to, power panel, convenience receptacles, dedicated receptacle for sump pump/dehumidifier, heater, lights, light switch, exhaust fans and pressure switches.
B. All ground wires from installed equipment shall be in conduit and shall lead back to the power panel to a plated aluminum ground buss specific for grounding purposes and so labeled. The ground buss shall be complete with a lug large enough to accept the installing electrician's bare copper earth ground wire. The bus shall serve as a bond between the earth ground and the equipment ground wires.

3.6 ELECTRICAL APPARATUS – SURGE PROTECTION DEVICE

A. A secondary surge arrester shall be provided. The housing shall be Noryl and be ultrasonically sealed. Valve blocks shall be metal oxide with an insulating ceramic collar. Gap design shall be annular. The lead wire shall be permanently crimped to the upper electrode forming part of the gap structure. The arrester shall be UL and CSA listed Lightning Protective Devices.

3.7 ELECTRICAL APPARATUS - POWER PANEL

A. **All circuit breakers shall be incorporated into one (1) NEMA 1 panel.** The electrical service provided for this station will be 230-volt, 1 phase, 60 cycle, 3 wire.

B. There shall be provided, thermal-magnetic trip circuit breakers as follows:

One (1) Main Breaker, 2 pole, 50 amps;

Six (6) Auxiliary Circuit Breakers, as follows:

1. Spare
2. Lights
3. Heater
4. Exhaust Fan
5. Sump Pump – Dehumidifier
6. Convenience Outlets

3.8 ELECTRICAL APPARATUS - CONDUIT AND WIRING

A. The service entrance conduits shall be **rigid steel conduit**, individually sized to accept the inbound service conductors and shall be installed from the main power panel through the equipment capsule side sheet and terminate exterior to the equipment capsule. The service entrance exterior conduit connection points shall be capped or plugged for shipment.

B. All wiring within the equipment capsule and outside of the panel shall be run in conduit except for the watertight flexible conduit and fittings properly used to connect fan motors, limit switches, etc., where flexible connections are best utilized. Only the sump pump and dehumidifier, where furnished by the original manufacturer with a UL approved rubber cord and plug, may be plugged into a receptacle.

C. EQUIPMENT CAPSULE CONDUIT - Rigid, heavy wall, Schedule 40 PVC with solvent weld moisture-proof connections, in minimum size 3/4" or larger, sized to handle the type, number and size of equipment conductors to be carried - in

compliance with Article 347 of the National Electrical Code and NEMA TC-2, Federal WC-1094A and UL-651 Underwriters Laboratory Specifications.

D. FLEXIBLE CONNECTIONS - Where flexible conduit connections are necessary, the conduit used shall be liquid-tight, flexible, totally nonmetallic, corrosion resistant, nonconductive, U.L. listed conduit sized to handle the type, number and size of equipment conductors to be carried - in compliance with Article 351 of the National Electrical Code.

E. MOTOR CIRCUIT CONDUCTORS - Sized for load. All branch circuit conductors supplying a single motor of one (1) horsepower or more shall have an ampacity of not less than 125 percent of the motor full load current rating, dual rated type THHN/THWN, as set forth in Article 310 and 430-B of the National Electrical Code, Schedule 310-13 for flame retardant, heat resistant thermoplastic, copper conductors in a nylon or equivalent outer covering.

F. CONTROL AND ACCESSORY WIRING - Sized for load, type MTW/AWM (Machine tool wire/appliance wiring material) as set forth in Article 310 and 670 of the National Electrical Code, Schedule 310-13 and NFPA Standard 79 for flame retardant, moisture, heat and oil resistant thermoplastic, copper conductors in compliance with NMTBA and as listed by Underwriters Laboratories (AWM), except where accessories are furnished with a manufacturer supplied UL approved rubber cord and plug.

3.9 ELECTRICAL APPARATUS – RECEPTACLES

A. **Two (2) duplex, ground fault circuit interrupter type receptacles** shall be furnished about the periphery of the equipment capsule, with one (1) receptacle adjacent to the main power panel. **One (1) additional receptacle, three-wire grounded type**, shall be installed and dedicated solely to sump pump/dehumidifier service only.

3.10 CONVENIENCE GROUP - LIGHTING

A. There shall be one or more two-tube, 32 watt per tube, electronic start, enclosed and gasketed, forty-eight (48) inch minimum length fluorescent light fixtures installed within the equipment capsule, as shown on the plan for this item. One (1) light fixture shall be located directly over the main control panel. The light switch shall be of the night glow type and be located within the hatch periphery. The light switch shall be wired to operate the exhaust fan equipment whenever the equipment capsule lights are on. Open fluorescent or incandescent fixtures **will not** be accepted.

3.11 CONVENIENCE GROUP - HEATER

A. One (1) each, wall mounted as shown.
   1. Rating - 10,240 BTU/HR - 3000 watts, 230 volts.
   2. Enclosed resistance wire within steel finned element.
   3. Control - thermostat.
   4. UL listed.
   5. Vane axial fan - floor flow discharge.
   6. Hard wired in conduit per UL 400-1.

3.12 CONVENIENCE GROUP - EXHAUST FAN

A. One (1) each, installed as shown.
   1. Capacity each 232 cfm at .2-inch static pressure.
   2. Shaded pole motor - squirrel cage blower.
   3. Hard wired in conduit to conduit box on motor per UL 400-1.
   4. 120-volt A.C. operation from wall mount thermostat and HAND/AUTO switch on main control panel.
   5. Hatch installed limit switch to activate exhaust fan whenever the entrance hatch is open.
   6. Exhaust air piping - 3 inch minimum.
   7. Air return piping - 3 inch minimum.
   8. Exhaust and return piping protected by 180E PVC return bend with removable insect screen.
   9. The automatic exhaust fan system specified herein should exempt this station from the limitations of permit-required confined space as detailed in the Code of Federal Regulations 1910.146(C)(5)(i)(B).

3.13 CONVENIENCE GROUP - SUMP PUMP

A. One (1) each, installed as shown.
   1. Capacity 19 gpm at 15 feet TDH.
   2. Impeller - glass filled valor.
   3. Cast iron motor shell, switch cap and pump housing.
   4. UL listed submersible oil filled motor - UL listed rubber power cord - 120-volt AC operation.
   5. Float operated, submersible (NEMA 6) mechanical switch.
   6. Completely submersible, hermetically sealed.
   7. Auto reset thermal overload protection.

8. PVC pump discharge piping 12" x 13" with single check valve - union both sides.
9. Provision for dewatering drain system for freeze protection.

3.14 CONVENIENCE GROUP - DEHUMIDIFIER

A. One (1) each, installed as shown.
   1. Capacity 25 pints per 24 hours (AHAM Standard DH-1).
   2. Refrigerant type, with environmentally safe refrigerant.
   3. Compressor rated 1/5 HP, 4.1 amps, 400 watts.
   4. Condensate piped direct to sump.
   5. 120-volt AC operation by dial-controlled adjustable humidistat.
   6. UL listed rubber cord.

3.15 FACTORY START-UP SERVICE

A. Start-up service technician shall be a **regular employee of the pressure reducing station manufacturer**.
B. As part of the submittal covering this equipment, list the factory service manager, his employee number, his telephone number with extension and his number of years with the company. List also each start-up service technician, his employee number and years of service with the company.
C. Verify that one (1) or more of the service technicians listed above will perform the required start-up service on the equipment covered in the submittal.
D. One (1) full day at job site for start-up and training.
E. Start-up service to include two (2) bound O&M manuals.
F. Start-up service report attested to by start-up technician and representative of owner or engineer.
G. Service report distributed to:
   1. Manufacturer's File
   2. Engineer's File
   3. Contractor's File
   4. Owner's File

3.16 WARRANTY

A. The warranty is the responsibility of the station manufacturer and that warranty shall be provided in written form to the contractor for inclusion with the submittal and said warranty shall at a minimum cover:

1. A period of one (1) year commencing upon **station acceptance** by the Owner and Engineer.
2. The one (1) year period shall be inviolate regardless of any component manufacturer's warranty for equipment and components within the station.
3. The warranty shall cover **all** equipment, components and systems provided in or with the station.
4. The warranty shall provide for replacement and/or repair of faulty or defective components at no cost to the owner during the warranty period.
5. Where deemed necessary, the manufacturer will be responsible for the labor of removal and reinstalling the defective or faulty components without cost to the owner.
6. No assumption of contingent liabilities for any component failure during warranty is made.

3.17 GENERAL LIABILITY INSURANCE

A. The pressure reducing station manufacturer shall furnish premises/ operations and products/completed operations general liability insurance from an insurance company with a rating of A-V according to the most recent Best's Key Rating Guide, in an amount equal to $10,000,000 per occurrence. The insurance certificate must be included with the manufacturer's submittal. The coverage must be provided by an insurance carrier licensed and admitted in the state of manufacture.

SECTION 33 12 19
HYDRANTS

PART 2 PRODUCTS

2.1 DRY-BARREL FIRE HYDRANT

Revise subparagraph 6 as follows:

6. Depth of Burial: Per Herriman City Standard Detail CW-15.

Add subparagraph 11 to paragraph A as follows:

11. Dry-barrel fire hydrant shall be as noted in the Culinary Water Parts List.

SECTION 33 12 33
WATER METER

PART 2 PRODUCTS

Replace Section 2.4 with the following

2.4 METER BOXES

A. ¾″ Meter: 21″ diameter 36″ high white HDPE barrel
B. ¾″ Meter for travel path applications: 24″ diameter 36″ high white HDPE barrel
C. 1″ Meter: 24″ diameter 36″ high white HDPE barrel
D. 1 ½″ and 2″ Meters: 36″ diameter 36″ high HDPE barrel
E. Cover: As noted in Culinary Water Parts List.

Add Sections 2.5 as follows

2.5 METER SETTERS

A. Culinary water meter setters shall be as noted in the Culinary Water Parts List with a dual check valve.

SECTION 33 13 00
DISINFECTION

PART 2 PRODUCTS

2.1 DISINFECTANT

Add article E as follows:

E. All chemicals used in performing the disinfection test shall conform to ANSI/NSF 60. Chemical containers shall bear the ANSI/NSF 60 certification mark.

PART 3 EXECUTION

3.2 DISINFECTION OF WATER LINES

Replace article E with the following:

E. If flushing does not produce a passing bacteriological test disperse disinfectant through the system to obtain 10 to 25 ppm of free chlorine residual. Residual shall not exceed 1.0 ppm.

Add articles H-K as follows:

H. The disinfection test shall be performed by the City at the CONTRACTOR's expense.
I. The new water line shall be disinfected by chlorination. All work and materials necessary to perform this function will be furnished by CONTRACTOR. The CONTRACTOR will be responsible for all related costs and fees related to the chlorination of the completed water line. This test shall be performed prior to connection of the new water lines to the existing Herriman City culinary water system. The CONTRACTOR shall notify OWNER at least 24 hours before the chlorination is scheduled. All valves shall remain closed until return of test. Any and all valves connecting to the existing infrastructure shall only by operated by City personnel.
J. The City will notify contractor of any bacteriological test results.
K. All flushing must be metered.

SECTION 33 41 00
STORM DRAINAGE SYSTEMS

PART 1 GENERAL

1.7 ACCEPTANCE

A. Each drainage system component must pass applicable commissioning requirements in Section 33 08 00.

Add subparagraph 1-2 as follows:

1. When performing CCTV activities, a Herriman City inspector shall be present during inspections.
2. Herriman City Inspector shall verify video inspections prior to system substantial bond release.

PART 2 PRODUCTS

2.1 PIPING AND FITTINGS

Add article D as follows:

D. High density polyethylene (HDPE) pipe may be considered for systems smaller than 24-inches in diameter outside the municipal right-of-way or in non traffic load bearing applications, per Herriman City Engineer approval. All other storm drain pipe shall be minimum class III reinforced concrete. Exceptions may be granted by the Herriman City Engineer at his discretion. Pressurized irrigation may use material for appropriate pressure rating requirements.

2.5 CLEANOUTS AND MANHOLES

Replace article B with the following:

B. Steps: Required.

2.6 INLETS, CATCH BASINS, CLEANOUTS

Add article D as follows:

D. No "breakout" , "knockout" or other form of box designed to have the concrete wall removed will be allowed in the city right-of-way for storm drain systems, irrigation systems or other uses unless approved by City Engineer.

CHAPTER 6
STANDARD PLANS

CHAPTER 6: STANDARD PLANS

HERRIMAN CITY AMENDMENTS, CLARIFICATIONS, AND ADDITIONS TO THE APWA MANUAL OF STANDARD PLANS – 2017 EDITION

The following contains the 2024 Edition of Herriman City's Amendments, Additions and Clarifications to the APWA Manual of Standard Plans – 2017 Edition.

The standards and specifications contained in the following amendments, additions and clarifications revise the 2017 Edition of the APWA Manual of Standard Plans and are applicable to all public works projects constructed under permit by Herriman City.

Should conflicts arise between the APWA Manual of Standard Plans and the 2024 Edition – Herriman City Amendments, Additions and Clarifications to the APWA Manual of Standard Plans – 2017 Edition, the latter shall govern and take precedence.

INDEX

PART 1. AMENDMENTS AND CLARIFICATIONS

APWA Standard Plan 205.1 Curb and Gutter

Use Type A curb and gutter

PART 2. ADDITIONS

HERRIMAN CITY STANDARD PLAT TITLE BLOCK ..... N/A
STREET INTERSECTION & UTILITY LOCATIONS RD-01
TYPICAL ROADWAY CROSS SECTION RD-01A
TYPICAL ROADWAY CROSS SECTION RD-01B
TYPICAL ROADWAY CROSS SECTION RD-01C
TYPICAL STREET INTERSECTION RD-02
STANDARD CUL-DE-SAC RD-03
SUPERELEVATED KNUCKLE RD-04
STANDARD STREET NAME SIGN RD-05
STANDARD REGULATORY AND WARNING SIGN RD-06
FIRE APPARATUS ACCESS ROADS RD-07
FIRE APPARATUS ACCESS ROADS RD-07A
CONCRETE SIDEWALK RD-08
ASPHALT CONNECTION & REPAIR DETAILS RD-09
APEX BIDIRECTIONAL ADA RAMP RD-10
DIRECTIONAL ADA RAMP RD-11
RESIDENTIAL STREETLIGHT SL-01
TOWN CENTER POST TOP STREETLIGHT SL-01A
POST TOP BRIDGE STREETLIGHT SL-01B
SINGLE ARTERIAL STREETLIGHT STANDARD SL-02
DOUBLE ARTERIAL STREETLIGHT STANDARD SL-02A
25′ SINGLE ARM CITY PARKING LOT POLE SL-03
25′ DOUBLE ARM CITY PARKING LOT POLE SL-03A
25′ SINGLE ARM RETAIL POLE SL-04
25′ DOUBLE ARM RETAIL POLE SL-04A
RETAIL SINGLE SHEPARD HOOK SL-05
RETAIL DOUBLE SHEPARD HOOK SL-05A
TYPICAL STREETLIGHTING LAYOUT SL-06

RESIDENTIAL STREETLIGHT POWER LAYOUT SL-07
RESIDENTIAL STREETLIGHT UNDERGROUND SL-08
RESIDENTIAL STREETLIGHT UNDERGROUND SL-08A
ARTERIAL SL CONDUIT & POWER LAYOUT SL-09
ARTERIAL STREETLIGHT UNDERGROUND DET. SL-10
TOWN CENTER STREETLIGHT UNDERGROUND SL-10A
ARTERIAL STREETLIGHT WIRING DETAIL SL-11
ARTERIAL STREETLIGHT WIRING DETAIL SL-11A
STAINLESS STEEL METER HOUSING DETAIL SL-12
STAINLESS STEEL METER HOUSING DETAIL SL-12A
BANNER PROGRAM SPECIFICATIONS SL-13
LID INFILTRATION CHAMBERS SD-01
POND OUTLET STRUCTURE SD-02
¾″ AND 1″ WATER METER WITH 1″ WATER SERVICE CW-01
¾″ AND 1″ WATER METER WITH 1″ WATER SERVICE CW-01A
WATER SERVICE RELOCATION CW-01B
CULINARY AND SECONDARY WATER TRENCH DETAILS CW-02
PRESSURE REDUCING VALVE (PRV) EFI STATION CW-07
PRESSURE REDUCING VALVE (PRV) EFI STATION CW-07A
WATER VALVE CW-08
VENT COVER / VENT DETAIL CW-09
VENT DETAIL CW-09A
SAMPLING STATION CW-10
SAMPLING STATION CW-10A
1½" AND 2" METER CW-11
1½" AND 2" METER CW-11A
TYPICAL 3″+ METER VAULT CW-12
TYPICAL 3″+ METER VAULT CW-12A
AIR COMBINATION VALVE CW-13
BLOW OFF HYDRANT CW-14
WASHOUT VALVE CW-14A
FIRE HYDRANT WITH VALVE CW-15
CULINARY WATER PARTS LIST CW-PL1
CULINARY WATER PARTS LIST CW-PL2
CULINARY WATER PARTS LIST CW-PL3
SECONDARY WATER SERVICE SW-01
IRRIGATION VALVE SW-08
SW AIR COMBINATION VALVE & ASSEMBLY SW-13
SW BLOW OFF HYDRANT SW-14
SW WASHOUT VALVE SW-14A

DRAIN DETAIL SW-15
SECONDARY WATER PARTS LIST SW-PL1
SECONDARY WATER PARTS LIST SW-PL2
NARROW TRENCH DETAIL CM-01
1D DUCT BANK DETAIL CM-02
TURF GRASS; SOD/SEED LP-01
6″ MOW STRIP LP-02
12″ MOW STRIP LP-03
18″ MOW STRIP LP-04
PERENNIAL PLANTING LP-05
DECIDUOUS TREE STAKING W/ WATERING BASIN LP-06
EVERGREEN TREET STAKING W/ WATERING BASIN LP-07
TREE/SHRUB PLANTING W/WATERING BASIN LP-08
GATE ASSEMBLY FOR TRAIL HEAD (OPTION A) LP-09
GATE ASSEMBLY FOR TRAIL HEAD (OPTION B) LP-10
LOCK ASSEMBLY FOR TRAIL HEAD GATE LP-11
STANDAR TRAIL SECTIONS LP-12
CONCRETE PLAYGROUND CURBING LP-13
DEEP EDGE PLAYGROUND SIDEWALK LP-14
APPROVED TREE LIST (1 OF 3) LP-15
APPROVED TREE LIST (2 OF 3) LP-16
APPROVED TREE LIST (3 OF 3) LP-17
APPROVED SEED MIX LP-18
WALL-MOUNT CONTROLLER IR-01
PEDESTAL-MOUNT CONTROLLER IR-02
REDUCED PRESSURE BACKFLOW ASSEMBLY IR-03
IRRIGATION CONTROL WIRE PULL BOX IR-04
DRIP ZONE CONTROL VALVE ASSEMBLY IR-05
DRIPLINE CONNECTIONS IR-06
DRIP TEE CONNECTION TO PVC RISER IR-07
DRIP ELL CONNECTION TO PVC RISER IR-08
DRIPLINE CIRCUIT LAYOUT IR-09
INLINE DRIP LAYOUTS IR-10
DRIP TREE RING IR-11
DRIP TREE RING - PHASED IR-12
DRIP TREE RING – PHASED SECTION IR-13
TREE RING CONNECTED TO SURFACE DRIP IR-14
SURFACE DRIPLINE LAYOUT IR-15
DRIP FLUSH VALVE (PLUMBED TO PVC HEADER) IR-16
DRIP FLUSH VALVE (PLUMBED TO DRIPLINE) IR-17

3″ AND LARGER FILTER ASSEMBLY IR-18
2″ AND SMALLER FILTER ASSEMBLY IR-19
TRENCH DETAIL IR-20
SLEEVE DETAIL IR-21
POP-UP GEAR DRIVE ROTO SPRINKLER IR-22
POP-UP SPRAY/ROTARY SPRINKLER IR-23
TYPICAL STREETSCAPE HEAD PATTERN IR-24
THRUST BLOCK DETAIL IR-25
2-WIRE CONTROL VALVE ASSEMBLY IR-26
2-WIRE DRIP ZONE REMOTE CONTROL VALVE IR-27
2-WIRE DECODER DIAGRAM IR-28
GROUND RODS FOR TWO WIRE SYSTEM IR-29
CONTROL VALVE ASSEMBLY IR-30
ISOLATION GATE VALVE (FLANGED 3″ & LARGER IR-31
ISOLATION GATE VALVE (PUSH-ON, 2″) IR-32
MANUAL DRAIN VALVE ASSEMBLY IR-33
HYDROMETER MASTER VALVE & FLOW SENSOR IR-34
QUICK COUPLING VALVE ASSEMBLY IR-35
EQUIPMENT SIZING TABLE IR-36
PHYSICAL DISCONNECT IR-37
IRRIGATION EQUIPMENT LIST (1 OF 2) IR-38
IRRIGATION EQUIPMENT LIST (2 OF 2) IR-39

ABBREVIATIONS

RD	Roadway
SL	Street Lights
SD	Storm Drain
CW	Culinary Water
SW	Secondary Water
CM	Communications
LP	Landscape
IR	Irrigation

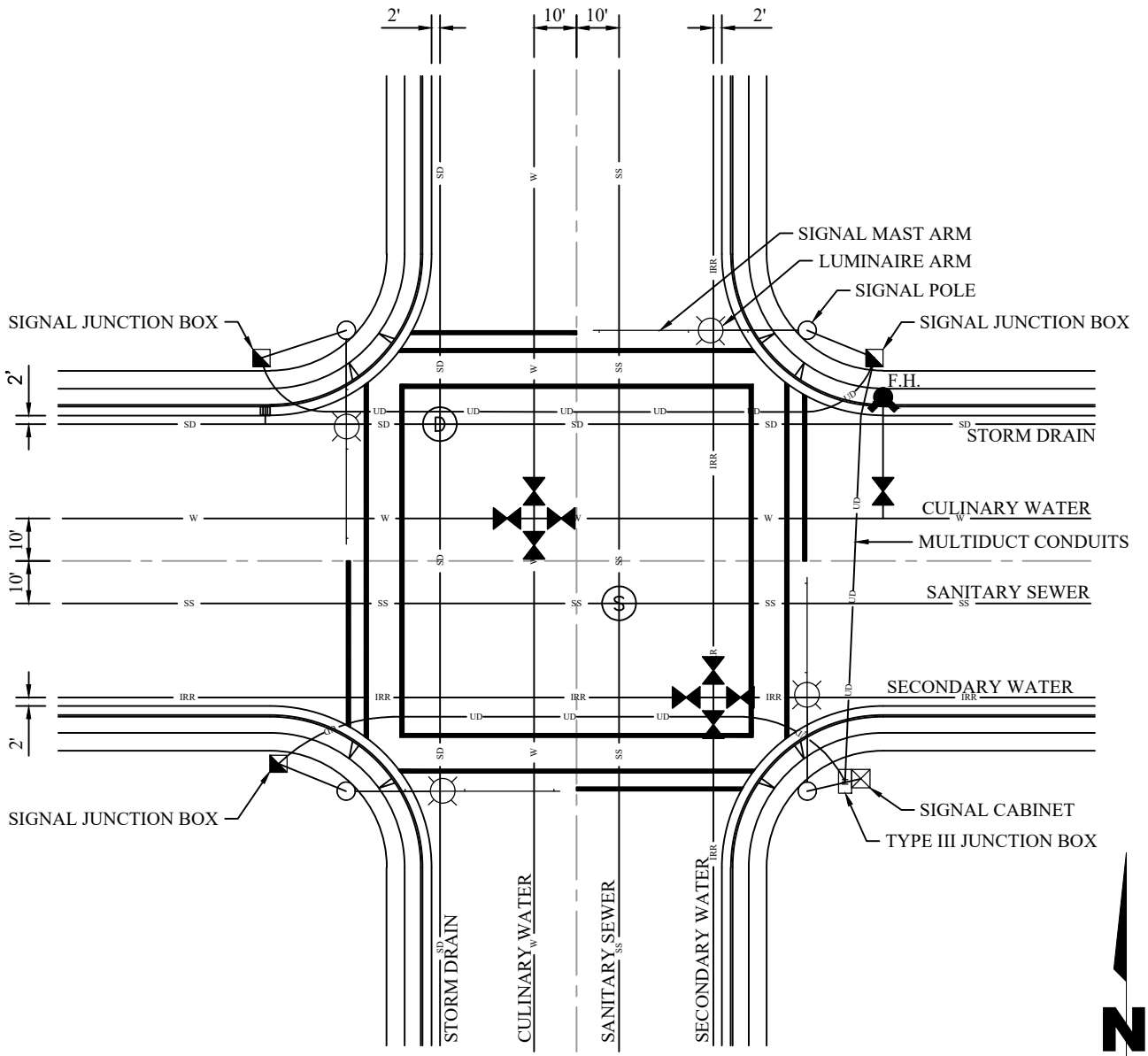

STREET INTERSECTIONS

Notes:

1. CULINARY WATER SHALL BE PLACED ON THE NORTH AND WEST OF STREET CENTERLINE.
2. SANITARY SEWER SHALL BE PLACED ON THE SOUTH AND EAST OF STREET CENTER LINE.
3. STORM DRAIN SHALL BE PLACED ON THE NORTH AND WEST SIDE OF STREET.
4. SECONDARY WATER SHALL BE PLACED ON THE SOUTH AND EAST SIDE OF STREET.

6/7/2024 11:33 AM Q:\ENGINEERING\STANDARDS\CITY STANDARDS\WORKING EDITION\CAD\SECTION 6 STANDARD DRAWINGS\RD\RD-01.DWG

NO.	REVISION DESCRIPTION	D-TE

THIS DOCUMENT -ND -NY ILLUSTR-TIONS HEREON -RE PROVIDED -S ST-ND-RD CONSTRUCTION DET-ILS WITHIN HERRIM-N CITY. DEVI-TION FROM THIS DOCUMENT REQUIRES -PPROV-L OF HERRIM-N CITY. HERRIM-N CITY C-NNOT BE HELD LI-BLE FOR MISUSE OR CH-NGES REG-RDING THIS DOCUMENT.

HERRIMAN CITY

HERRIMAN CITY
ENGINEERING DEPARTMENT
ROADWAY
STREET INTERSECTION & UTILITY LOCATIONS

RD-01

NO.	REVISION DESCRIPTION	D-TE
1	2024 ST-ND-RDS UPD-TE	5/13/2024

THIS DOCUMENT -ND -NY ILLUSTR-TIONS HEREON -RE PROVIDED -S ST-ND-RD CONSTRUCTION DET-ILS WITHIN HERRIM-N CITY. REV-TION FROM THIS DOCUMENT REQUIRES THAT HERRIM-N CITY -NNOT BE HELD L-BLE FOR MISUSE OR CH-NGES REG-RDING THIS DOCUMENT.

HERRIMAN CITY

HERRIMAN CITY
ENGINEERING DEPARTMENT
ROADWAY
TYPICAL ROADWAY CROSS SECTION

RD-01A

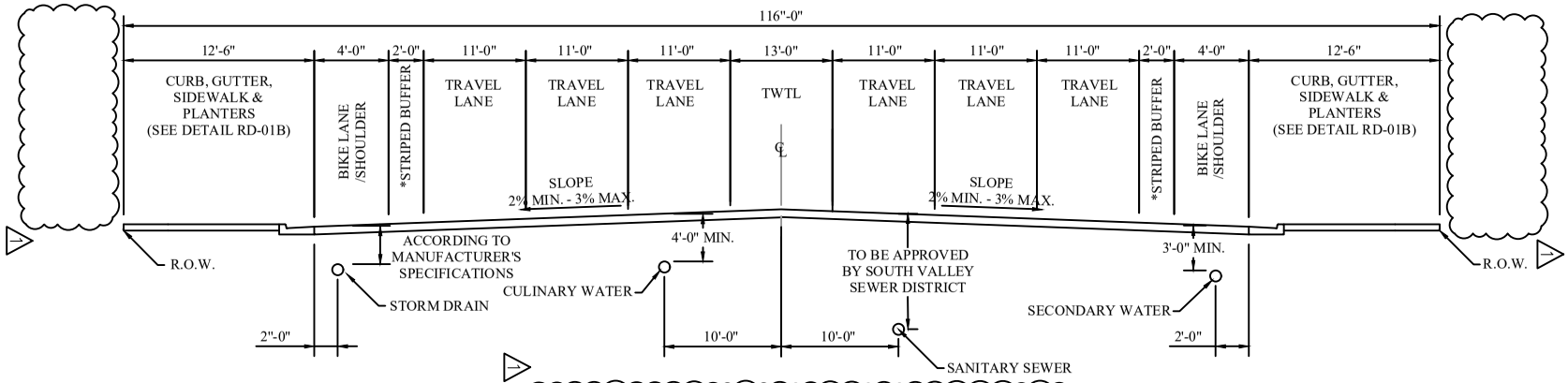

PRINCIPAL ARTERIAL - 116'-0" RIGHT-OF-WAY

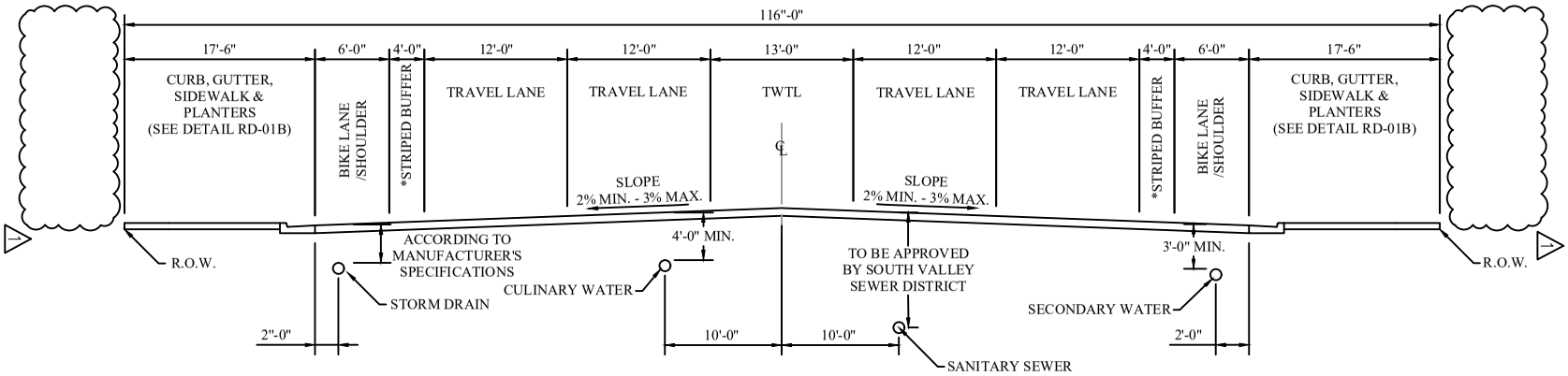

MAJOR ARTERIAL - 116'-0" RIGHT-OF-WAY

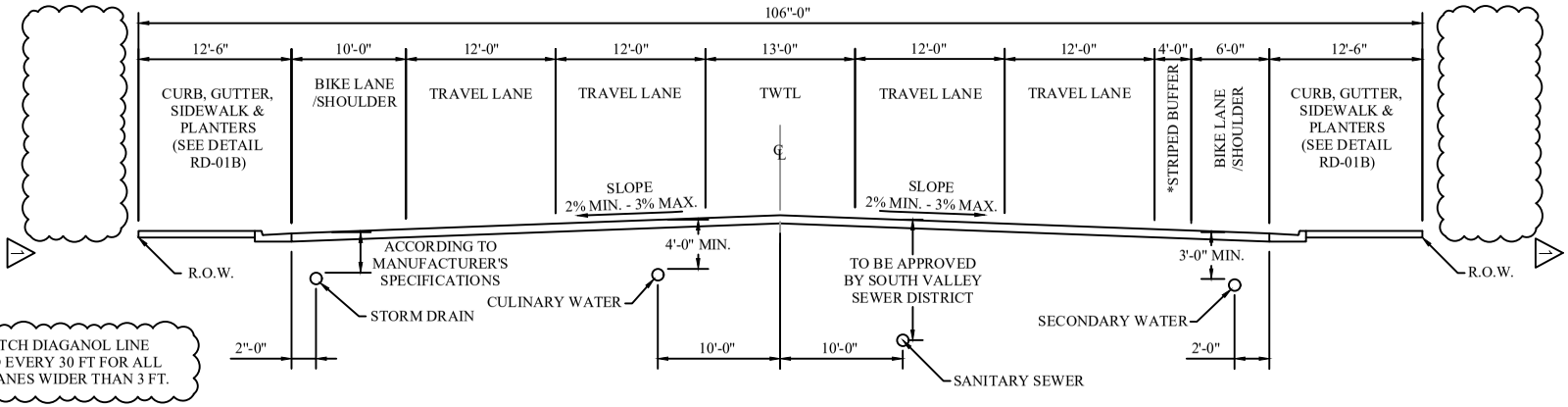

MINOR ARTERIAL - 106'-0" RIGHT-OF-WAY

* CROSS HATCH DIAGANOL LINE REQUIRED EVERY 30 FT FOR ALL BUFFER LANES WIDER THAN 3 FT.

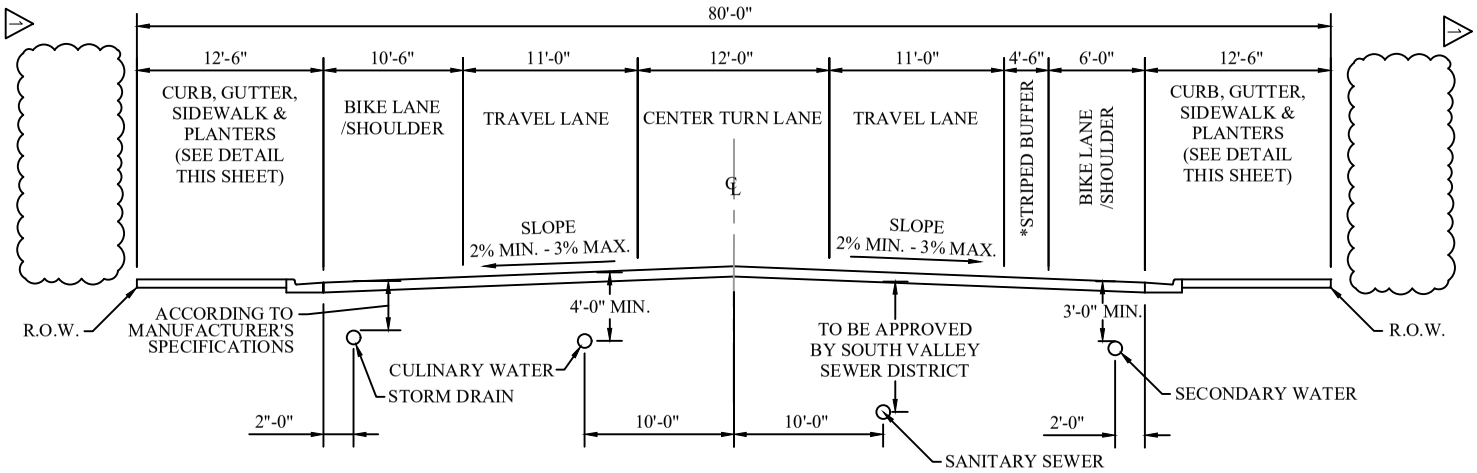

MAJOR COLLECTOR- 80'-0" RIGHT-OF-WAY

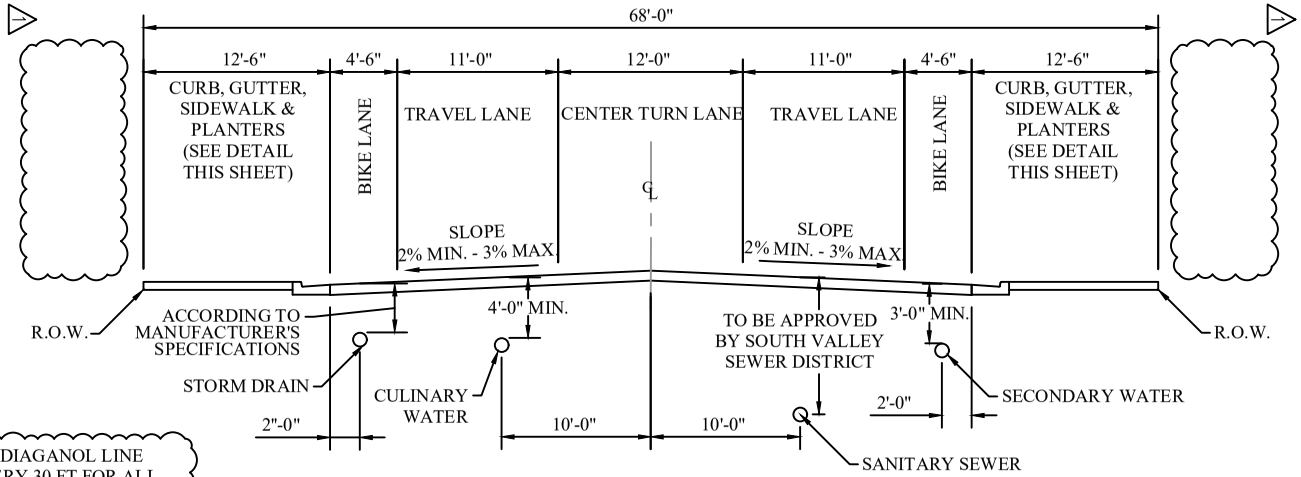

* CROSS HATCH DIAGANOL LINE REQUIRED EVERY 30 FT FOR ALL BUFFER LANES WIDER THAN 3 FT.

MINOR COLLECTOR - 68'-0" RIGHT-OF-WAY

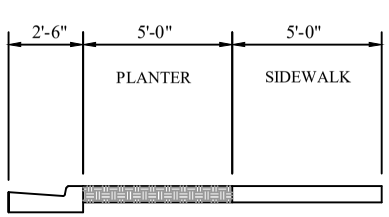

68' & 80' RIGHT-OF-WAY

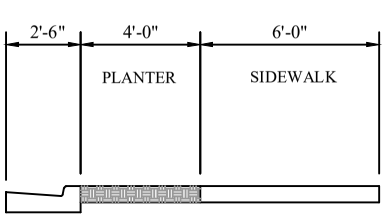

106'-0" RIGHT-OF-WAY

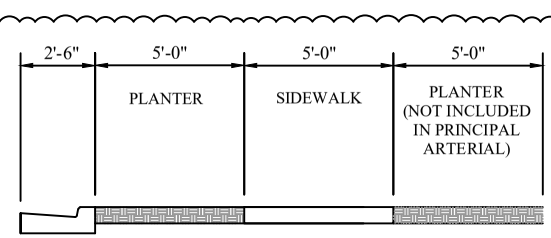

116'-0" ARTERIAL RIGHT-OF-WAY

NO.	REVISION DESCRIPTION	D-TE
1	2024 ST-ND-RDS UPD-TE	5/13/2024

THIS DOCUMENT -ND -NY ILLUSTR-TIONS HEREON -RE PROVIDED -S ST-ND-RD CONSTRUCTION DET-ILS WITHIN HERRIM-N CITY. DEVI-TION FROM THIS DOCUMENT REQUIRES -PPROV-L OF HERRIM-N CITY. HERRIM-N CITY C-NNOT BE HELD LI-BLE FOR MISUSE OR CH-NGES REG-RDING THIS DOCUMENT.

HERRIMAN CITY

HERRIMAN CITY
ENGINEERING DEPARTMENT
ROADWAY
TYPICAL ROADWAY CROSS SECTION

RD-01B

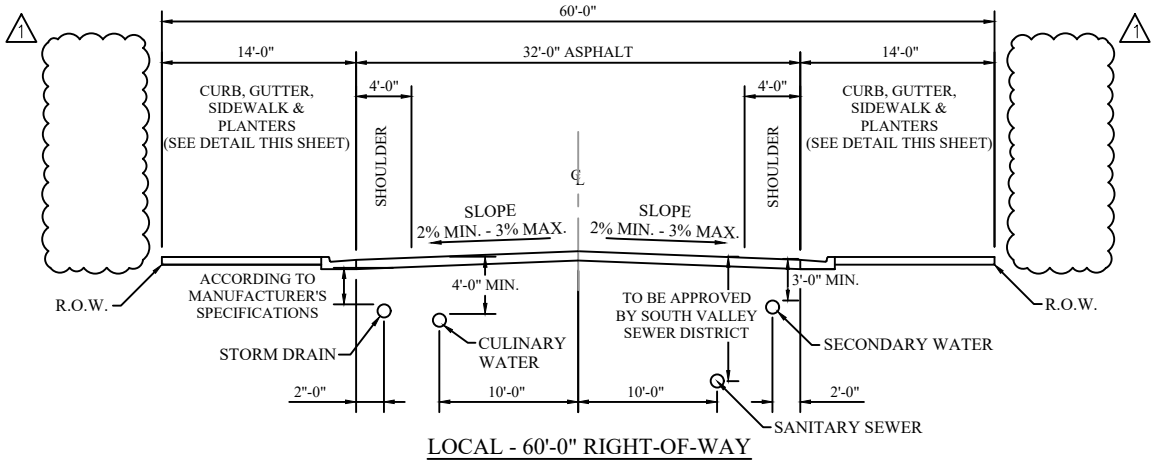

LOCAL - 60'-0" RIGHT-OF-WAY

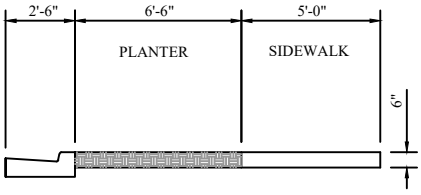

60'-0" RIGHT-OF-WAY

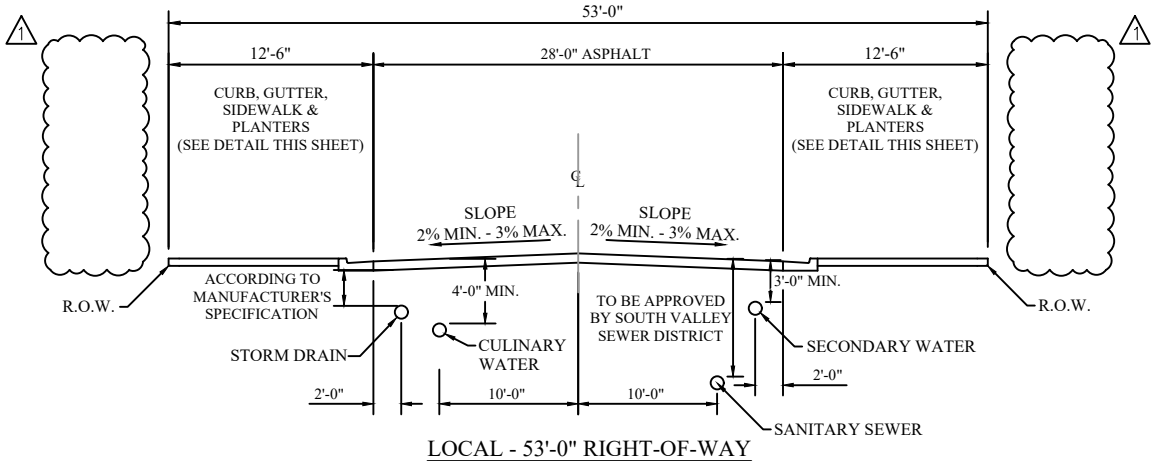

LOCAL - 53'-0" RIGHT-OF-WAY

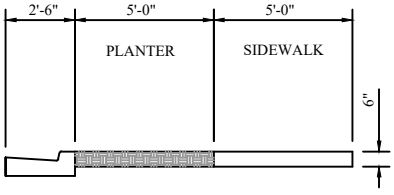

53'-0" RIGHT-OF-WAY

NO.	REVISION DESCRIPTION	D-TE
1	2024 ST-ND-RDS UPD-TE	6/25/2024

THIS DOCUMENT -ND -NY ILLUSTR-TIONS HEREON -RE PROVIDED -S ST-ND-RD CONSTRUCTION DET-ILS WITHIN HERRIM-N CITY. DEVI-TION FROM THIS DOCUMENT REQUIRES -PPROV-L OF HERRIM-N CITY. HERRIM-N CITY C-NNOT BE HELD LI-BLE FOR MISUSE OR CH-NGES REG-RDING THIS DOCUMENT.

HERRIMAN CITY

HERRIMAN CITY
ENGINEERING DEPARTMENT
ROADWAY
TYPICAL ROADWAY CROSS SECTION

RD-01C

6/25/2024 2:37 PM Q:\ENGINEERING\STANDARDS\CITY STANDARDS\WORKING EDITION\CAD\SECTION 6 STANDARD DRAWINGS\02 - RD\RD-01C.DWG

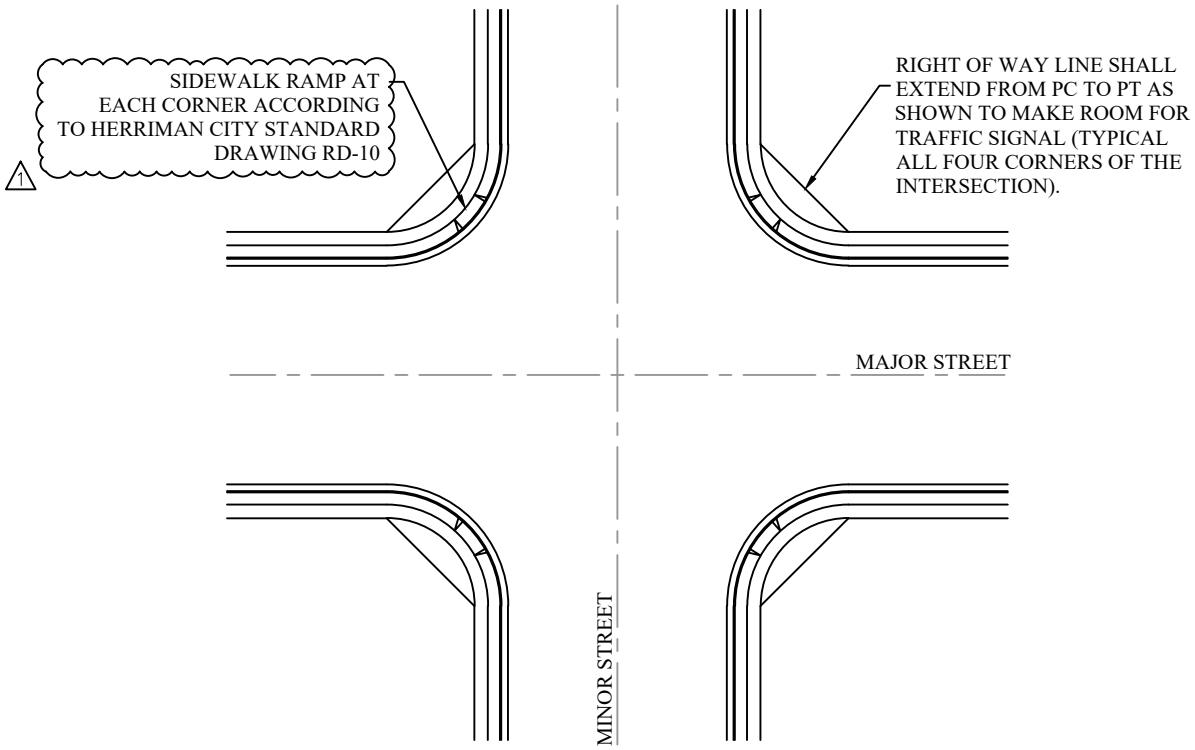

COLLECTOR AND ARTERIAL STREET INTERSECTIONS

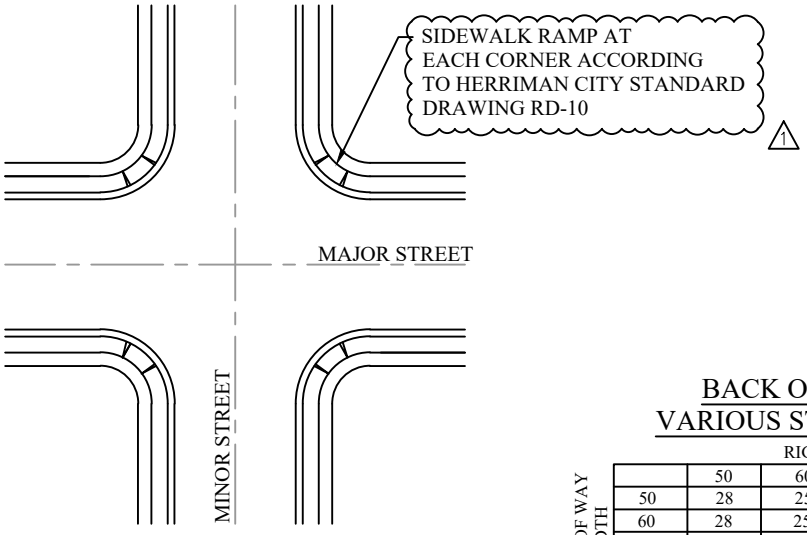

MINOR STREET INTERSECTIONS

BACK OF CURB RADII FOR VARIOUS STREET INTERSECTION

RIGHT OF WAY WIDTH	RIGHT OF WAY WIDTH					
	50	60	68	80	106
50	28	25	25	30	30
60	28	25	25	30	30
68	28	25	30	30	30
80	30	30	30	40	40
106	30	30	30	40	40

Notes:

1. MATERIALS, CONSTRUCTION, AND WORKMANSHIP SHALL BE IN ACCORDANCE WITH THE CITY OF HERRIMAN ENGINEERING STANDARD SPECIFICATIONS.
2. TRANSITION STRUCTURE SHALL BE IN ACCORDANCE WITH APWA PLAN NO. 213.
3. CURB AND GUTTER SHALL BE TYPE A IN ACCORDANCE WITH APWA PLAN NO. 205.
4. CROSS DRAIN GUTTER NOT ALLOWED ACROSS COLLECTORS OR ARTERIALS.

6/25/2024 2:40 PM Q:\ENGINEERING\STANDARDS\CITY STANDARDS\WORKING EDITION\CAD\SECTION 6 STANDARD DRAWINGS\02 - RD\RD-02.DWG

NO.	REVISION DESCRIPTION	D-TE
1	2024 ST-ND-RDS UPD-TE	6/25/2024

THIS DOCUMENT -ND -NY ILLUSTR-TIONS HEREON -RE PROVIDED -S ST-ND-RD CONSTRUCTION DET-ILS WITHIN HERRIM-N CITY. DEVI-TION FROM THIS DOCUMENT REQUIRES -PPROV-L OF HERRIM-N CITY. HERRIM-N CITY C-NNOT BE HELD LI-BLE FOR MISUSE OR CH-NGES REG-RDING THIS DOCUMENT.

HERRIMAN CITY
ENGINEERING DEPARTMENT
ROADWAY
TYPICAL STREET INTERSECTION

RD-02

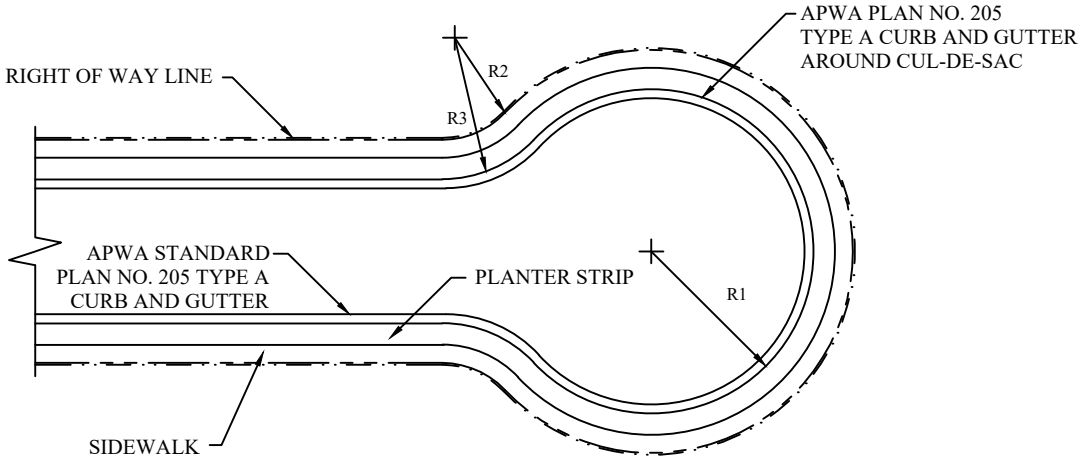

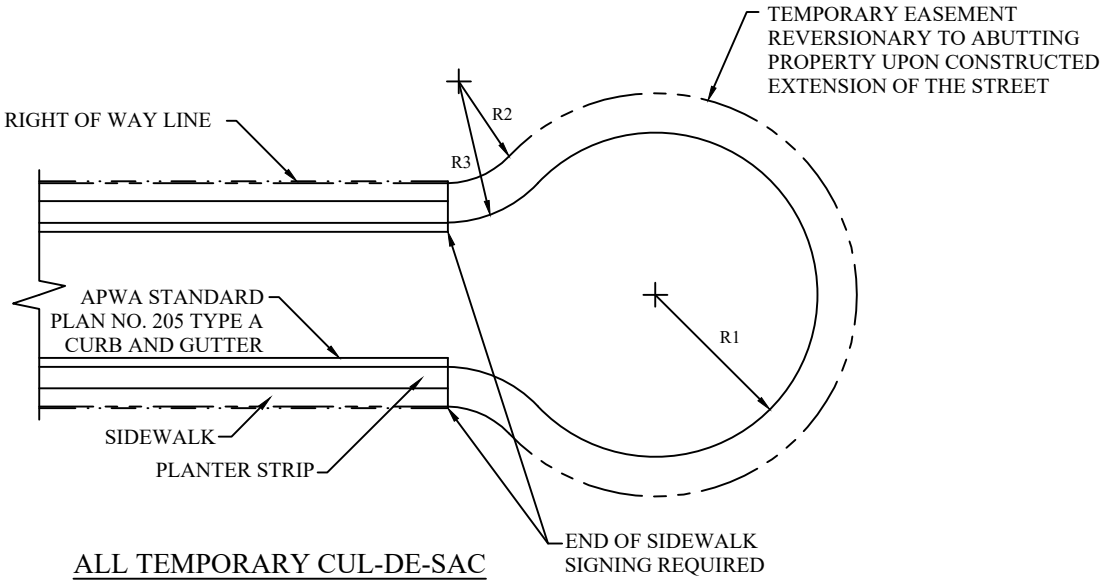

ALL TEMPORARY CUL-DE-SAC
VARIATIONS MUST HAVE APPROVAL
OF CITY ENGINEER AND CITY FIRE AUTHORITY

	RESIDENTIAL	INDUSTRIAL
R1	48	60
R2	*	*
R3	35	35

*R2 = R3 - WIDTH OF SIDEWALK - WIDTH OF PLANTER

6/7/2024 11:39 AM Q:\ENGINEERING\STANDARDS\CITY STANDARDS\WORKING EDITION\CAD\SECTION 6 STANDARD DRAWINGS\RD\RD-03.DWG

NO.	REVISION DESCRIPTION	D-TE

THIS DOCUMENT -ND -NY ILLUSTR-TIONS HEREON -RE PROVIDED -S ST-ND-RD CONSTRUCTION DET-ILS WITHIN HERRIM-N CITY. DEVI-TION FROM THIS DOCUMENT REQUIRES -PPROV-L OF HERRIM-N CITY. HERRIM-N CITY C-NNOT BE HELD LI-BLE FOR MISUSE OR CH-NGES REG-RDING THIS DOCUMENT.

HERRIMAN CITY

HERRIMAN CITY
ENGINEERING DEPARTMENT
ROADWAY
STANDARD CUL-DE-SAC

RD-03

W	B
66'	20.5'
60'	16'

* CROWN LINE CAN BE MOVED TO WITHIN 7' OF OUTSIDE CURB.

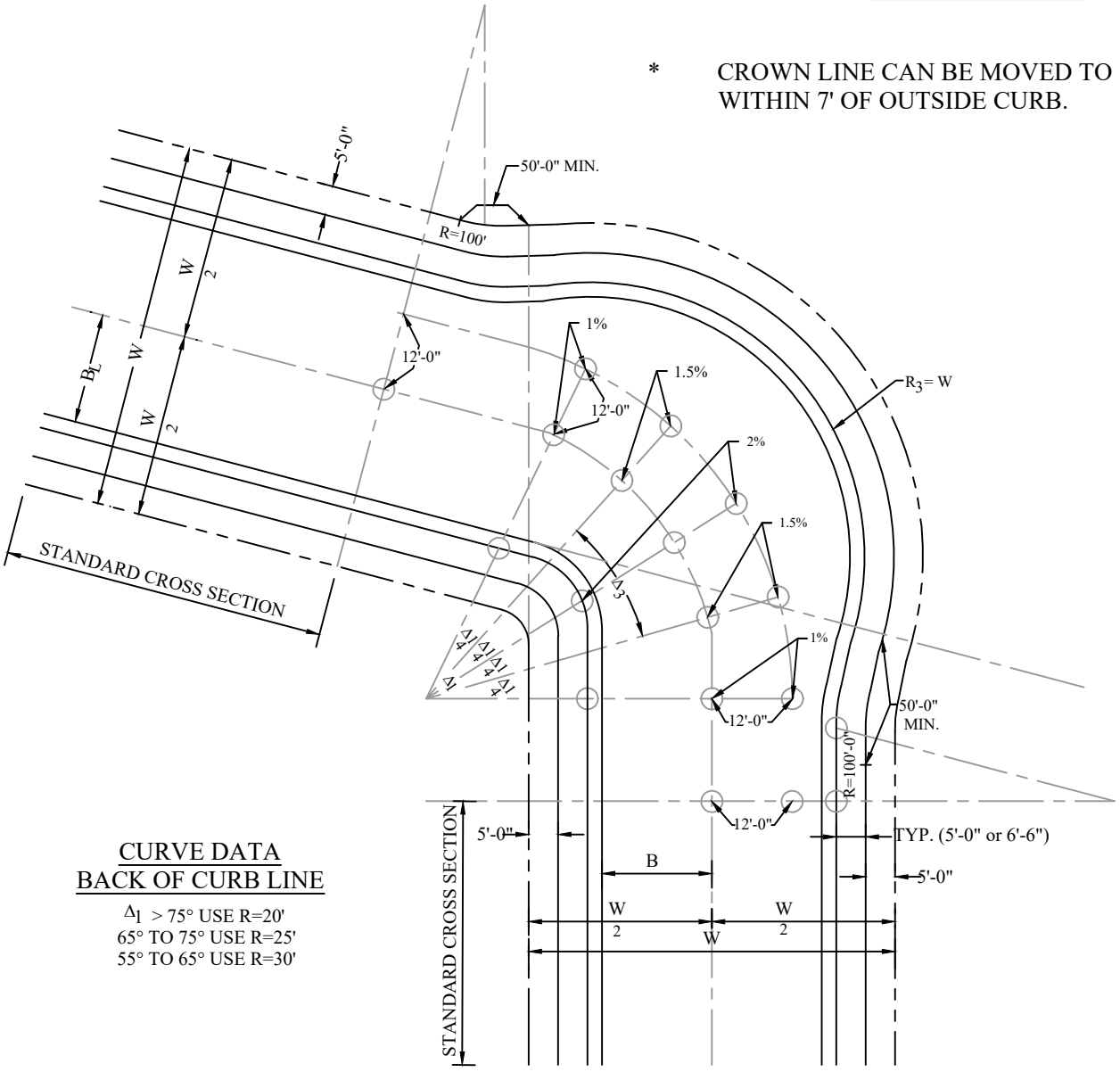

CURVE DATA
BACK OF CURB LINE

Δ_1 > 75° USE R=20'
65° TO 75° USE R=25'
55° TO 65° USE R=30'

NOTES:

1. ELEVATIONS ARE REQUIRED WHERE CIRCLED.
2. LIMITS OF SLOPE, CROWN LINE TO OUTSIDE GUTTER: MAXIMUM 4%; MINIMUM=1%

NO.	REVISION DESCRIPTION	D-TE

THIS DOCUMENT -ND -NY ILLUSTR-TIONS HEREON -RE PROVIDED -S ST-ND-RD CONSTRUCTION DET-ILS WITHIN HERRIM-N CITY. DEVI-TION FROM THIS DOCUMENT REQUIRES -PPROV-L OF HERRIM-N CITY. HERRIM-N CITY C-NNOT BE HELD LI-BLE FOR MISUSE OR CH-NGES REG-RDING THIS DOCUMENT.

HERRIMAN CITY

HERRIMAN CITY
ENGINEERING DEPARTMENT
ROADWAY
SUPERELEVATED KNUCKLE

RD-04

6/7/2024 11:40 AM Q:\ENGINEERING\STANDARDS\CITY STANDARDS\WORKING EDITION\CAD\SECTION 6 STANDARD DRAWINGS\RD\RD-04.DWG

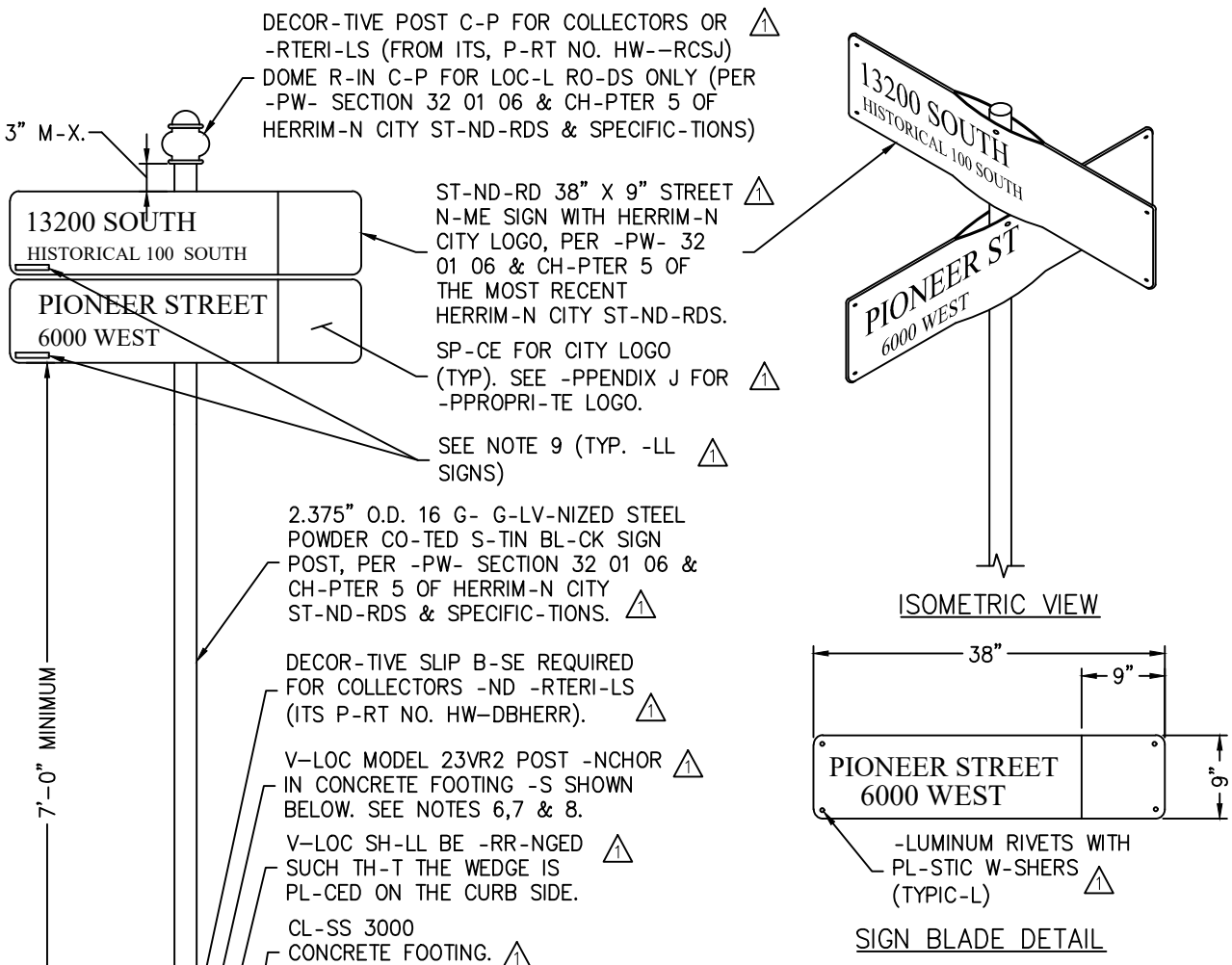

STREET SIGN DETAIL

1. -LL MOUNTING H-RDW-RE, POST, C-P -ND B-SE TO BE POWDER CO-TED S-TIN BL-CK.
2. -LL H-RDW-RE -ND INST-LL-TION SH-LL CONFORM TO -PW- 32 01 06, CH-PTER 5 OF HERRIM-N CITY ST-ND-RDS, -ND THE M-NU-L ON UNIFORM TR-FFIC CONTROL DEVICES (MUTCD).
3. NO OTHER SIGNS SH-LL BE MOUNTED ON THE POST WITH THE STREET N-ME SIGNS EXCEPT FOR NOT OUTLET SIGNS (W14–1- & W14–2-).
4. CONT-CT INTERMOUNT-IN TR-FFIC S-FETY (ITS) FOR -DDITION-L INFORM-TION REG-RDING P-RTS -ND SUPPLY. 801.972.6515.
5. SIGN SH-LL INCLUDE D-TE OF SIGN CONSTRUCTION -ND - L-BEL INCLUDING M-NUF-CTURE INFORM-TION -S OUTLINED IN SECTION 32 01 06 (2.1)(K) OF CH-PTER 5 OF HERRIM-N CITY ST-ND-RDS & SPECIFIC-TIONS.
6. POSTS FOR DRIVER FEEDB-CK SIGNS OR POSTS INST-LLED IN P-VED SURF-CES SH-LL BE INST-LLED WITH - SLIP B-SE PER UDOT ST-ND-RD FOUND ON UDOT'S WEBSITE -T HTTPS://WWW.UDOT.UT-H.GOV/CONNECT/BUSINESS/ST-ND-RDS/
7. TOP OF V–LOC SYSTEM SH-LL BE FLUSH WITH THE TOP OF CURB -ND CENTER OF CONCRETE FOOTING.
8. POST SH-LL NOT BE PL-CED IN THE -NCHOR UNTIL THE CONCRETE FOOTING H-S CURED FOR MINIMUM 48 HOURS.
9. PROVIDE M-NUF-CTURE -ND D-TE L-BEL -S OUTLINED IN THE HERRIM-N CITY SPECIFIC-TION SECTION 32 01 05(2.1)(J)(1).

NO.	REVISION DESCRIPTION	D-TE
1	2024 ST-ND-RDS UPD-TE	12/13/2022

THIS DOCUMENT AND ANY ILLUSTRATIONS HEREON ARE PROVIDED AS STANDARD CONSTRUCTION DETAILS WITHIN HERRIMAN CITY. DEVIATION FROM THIS DOCUMENT REQUIRES APPROVAL OF HERRIMAN CITY. HERRIMAN CITY CANNOT BE HELD LIABLE FOR MISUSE OR CHANGES REGARDING THIS DOCUMENT.

HERRIMAN CITY

HERRIMAN CITY
ENGINEERING DEPARTMENT
ROADWAY
STANDARD STREET NAME SIGN

RD-05

6/25/2024 3:06 PM Q:\ENGINEERING\STANDARDS\CITY STANDARDS\WORKING EDITION\CAD\SECTION 6 STANDARD DRAWINGS\02 – RD\RD-05.DWG

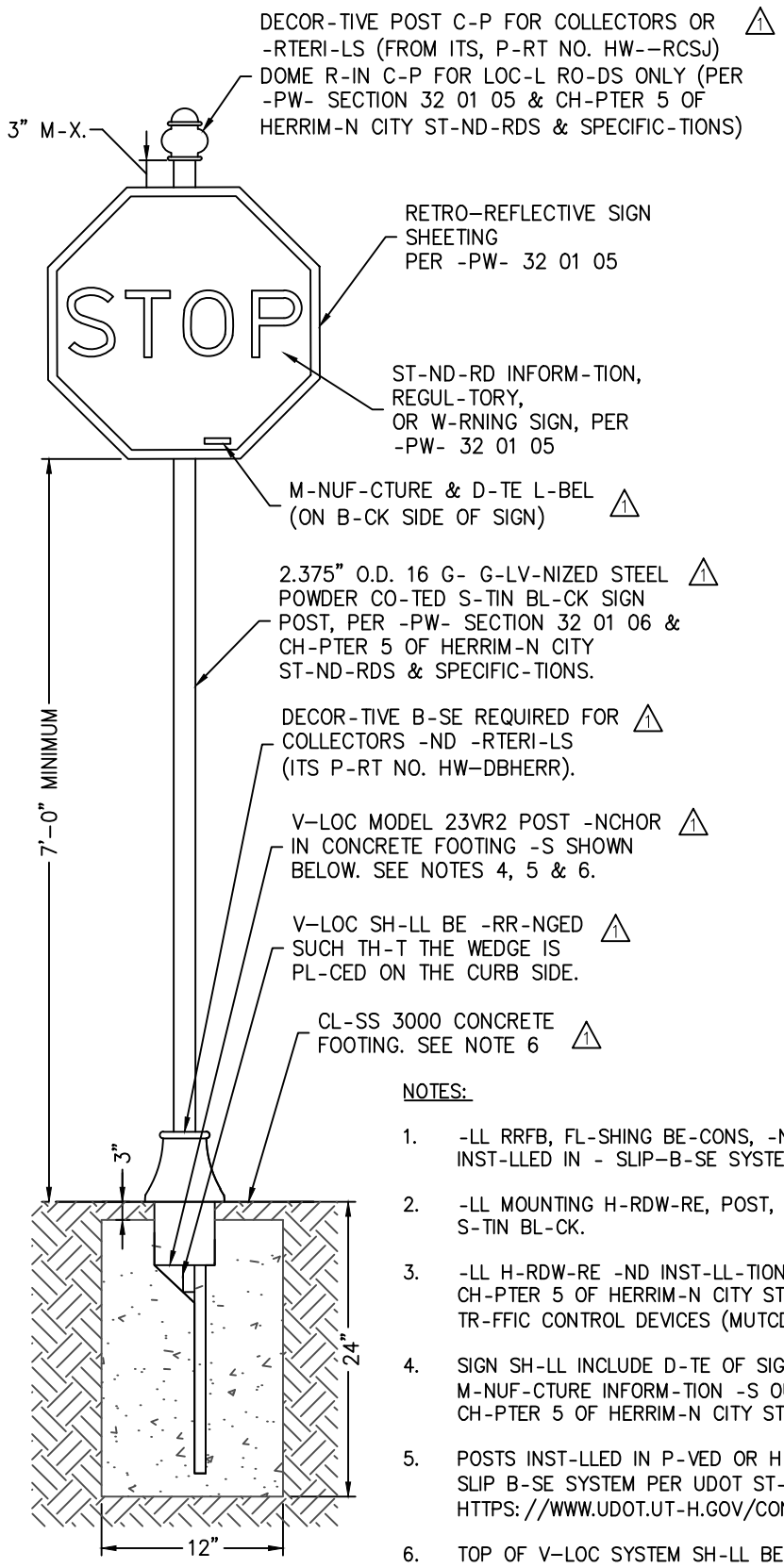

STREET SIGN DETAIL

NOTES:

1. -LL RRFB, FL-SHING BE-CONS, -ND DRIVER FEEDB-CK SIGNS SH-LL BE INST-LLED IN - SLIP–B-SE SYSTEM R-THER TH-N THE V–LOC -NCHOR
2. -LL MOUNTING H-RDW-RE, POST, C-P -ND B-SE TO BE POWDER CO-TED S-TIN BL-CK.
3. -LL H-RDW-RE -ND INST-LL-TION SH-LL CONFORM TO -PW- 32 01 05, CH-PTER 5 OF HERRIM-N CITY ST-ND-RDS, -ND THE M-NU-L ON UNIFORM TR-FFIC CONTROL DEVICES (MUTCD).
4. SIGN SH-LL INCLUDE D-TE OF SIGN CONSTRUCTION -ND - L-BEL INCLUDING M-NUF-CTURE INFORM-TION -S OUTLINED IN SECTION 32 01 05 (2.1)(J) OF CH-PTER 5 OF HERRIM-N CITY ST-ND-RDS & SPECIFIC-TIONS.
5. POSTS INST-LLED IN P-VED OR H-RD SURF-CES SH-LL BE INST-LLED WITH - SLIP B-SE SYSTEM PER UDOT ST-ND-RD FOUND ON UDOT'S WEBSITE -T HTTPS://WWW.UDOT.UT-H.GOV/CONNECT/BUSINESS/ST-ND-RDS/
6. TOP OF V–LOC SYSTEM SH-LL BE FLUSH WITH THE TOP OF CURB.
7. POST SH-LL BE PL-CED IN CENTER OF CONCRETE FOOTING, -ND SH-LL NOT BE PL-CED IN THE -NCHOR UNTIL THE CONCRETE FOOTING H-S CURED FOR MINIMUM 48 HOURS.

NO.	REVISION DESCRIPTION	D-TE
1	2024 ST-ND-RDS UPD-TE	12/13/2022

THIS DOCUMENT AND ANY ILLUSTRATIONS HEREON ARE PROVIDED AS STANDARD CONSTRUCTION DETAILS WITHIN HERRIMAN CITY. DEVIATION FROM THIS DOCUMENT REQUIRES APPROVAL OF HERRIMAN CITY. HERRIMAN CITY CANNOT BE HELD LIABLE FOR MISUSE OR CHANGES REGARDING THIS DOCUMENT.

HERRIMAN CITY

HERRIMAN CITY
ENGINEERING DEPARTMENT
ROADWAY
STANDARD REGULATORY AND WARNING SIGN

RD-06

6/25/2024 3:12 PM Q:\ENGINEERING\STANDARDS\CITY STANDARDS\WORKING EDITION\CAD\SECTION 6 STANDARD DRAWINGS\02 - RD\RD-06.DWG

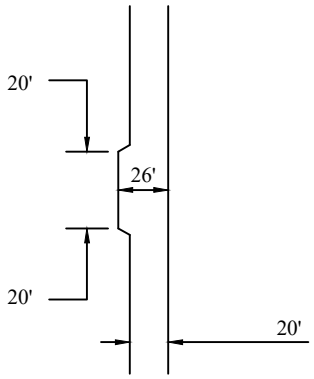

A DETAIL - MINIMUM CLEARANCE AROUND FIRE HYDRANT
SCALE: NO SCALE

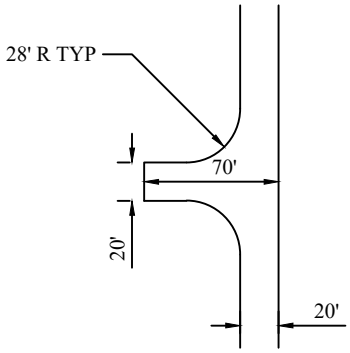

B DETAIL - ACCEPTABLE ALTERNATIVE TO 120' HAMMERHEAD
SCALE: NO SCALE

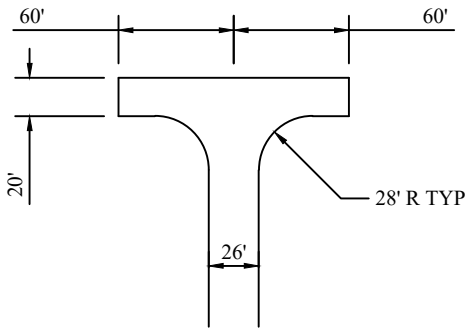

C DETAIL - 120' HAMMERHEAD
SCALE: NO SCALE

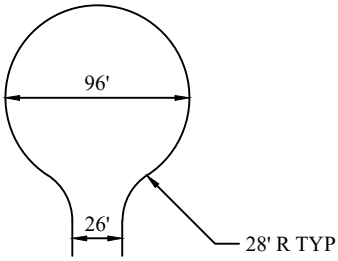

D DETAIL - 96' DIA. CUL-DE-SAC
SCALE: NO SCALE

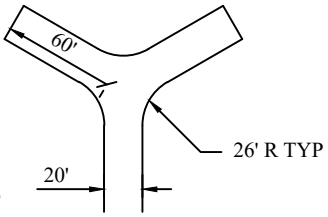

E DETAIL - 60' "Y"
SCALE: NO SCALE

REQUIREMENTS FOR DEAD-END FIRE APPARATUS ACCESS ROADS		
LENGTH (FEET)	WIDTH (FEET)	TURNAROUNDS REQUIRED
0-150	20	NONE REQUIRED
151-500	20	120-FOOT HAMMERHEAD, 60-FOOT "Y" OR 96-FOOT-DIAMETER CUL-DE-SAC IN ACCORDANCE WITH FIGURE BELOW
501-750	20	120-FOOT HAMMERHEAD, 60-FOOT "Y" OR 96-FOOT-DIAMETER CUL-DE-SAC IN ACCORDANCE WITH FIGURE BELOW
OVER 750	SPECIAL APPROVAL REQUIRED	

F DETAIL - TABLE
SCALE: NO SCALE



G DETAIL - SIGN TYPE "A"
SCALE: NO SCALE



H DETAIL - SIGN TYPE "C"
SCALE: NO SCALE

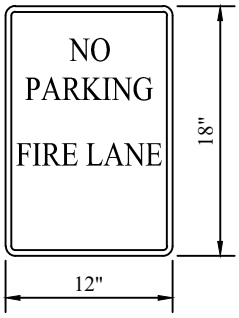

I DETAIL - SIGN TYPE "D"
SCALE: NO SCALE

SEE NOTES ON RD-07A

NO.	REVISION DESCRIPTION	D-TE

THIS DOCUMENT -ND -NY ILLUSTR-TIONS HEREON -RE PROVIDED -S ST-ND-RD CONSTRUCTION DET-ILS WITHIN HERRIM-N CITY. DEVI-TION FROM THIS DOCUMENT REQUIRES -PPROV-L OF HERRIM-N CITY. HERRIM-N CITY C-NNOT BE HELD LI-BLE FOR MISUSE OR CH-NGES REG-RDING THIS DOCUMENT.

HERRIMAN CITY

HERRIMAN CITY
ENGINEERING DEPARTMENT
ROADWAY
FIRE APPARATUS ACCESS ROADS

RD-07

6/7/2024 12:18 PM Q:\ENGINEERING\STANDARDS\CITY STANDARDS\WORKING EDITION\CAD\SECTION 6 STANDARD DRAWINGS\RD\RD-07.DWG

NOTES:

1. FIRE APPARATUS ACCESS ROADS SHALL BE IN ACCORDANCE WITH THIS DETAIL AND ALL OTHER APPLICABLE REQUIREMENTS OF THE INTERNATIONAL FIRE CODE.

2. ACCESS AND LOADING. FACILITIES, BUILDINGS OR PORTIONS OF BUILDINGS HEREAFTER CONSTRUCTED SHALL BE ACCESSIBLE TO FIRE DEPARTMENT APPARATUS BY THE WAY OF AN APPROVED ALL-WEATHER MAINTAINABLE ACCESS ROAD WITH ASPHALT, OR CONCRETE CAPABLE OF SUPPORTING THE IMPOSED LOAD OF FIRE APPARATUS WEIGHING AT LEAST 75,000 POUNDS. ACCESS ROADS SHALL HAVE A MINIMUM CLEAR WIDTH OF 20 FEET AND A MINIMUM CLEAR HEIGHT OF 13 FEET 6 INCHES.

3. ACCESS ROAD WIDTH WITH A HYDRANT. WHERE A FIRE HYDRANT IS LOCATED ON A FIRE APPARATUS ACCESS ROAD, THE MINIMUM ROAD WIDTH SHALL BE 26 FEET.

4. GRADE. FIRE APPARATUS ACCESS ROADS SHALL NOT EXCEED 10% IN GRADE. EXCEPTION: GRADES STEEPER THAN 10% AS APPROVED BY FIRE CODE OFFICIAL.

5. TURNING RADIUS. THE MINIMUM TURNING RADIUS SHALL BE 28 FOOT INSIDE DIAMETER AND 48 FOOT OUTSIDE DIAMETER FOR FIRE APPARATUS ACCESS ROADS.

6. DEAD ENDS. DEAD END FIRE APPARATUS ACCESS ROADS IN EXCESS OF 150 FEET SHALL BE PROVIDED WITH WIDTH AND TURNAROUND PROVISIONS IN ACCORDANCE WITH TABLE DETAIL F.

7. BRIDGES AND ELEVATED SURFACES. BRIDGES AND ELEVATED SURFACES MUST BE CONSTRUCTED AND MAINTAINED IN ACCORDANCE WITH AASHTO STANDARD SPECIFICATION FOR HIGHWAY BRIDGES AND DESIGNED TO CARRY THE LOADS OF FIRE APPARATUS (75,000 POUNDS).

8. WHERE TWO ACCESS POINTS ARE REQUIRED, THEY SHALL BE PLACED A DISTANCE APART EQUAL TO NOT LESS THAN ONE HALF OF THE LENGTH OF THE MAXIMUM OVERALL DIMENSION OF THE PROPERTY OR AREA TO BE SERVED, MEASURED IN A STRAIGHT LINE BETWEEN ACCESSES.

9. FIRE APPARATUS ACCESS ROAD GATES. GATES SECURING THE FIRE APPARATUS ROADS SHALL BE APPROVED BY THE FIRE CODE OFFICIAL AND MUST COMPLY WITH ALL OF THE FOLLOWING CRITERIA:

   9.A. THE MINIMUM GATE WIDTH SHALL BE 20 FEET FOR A SINGLE GATE, OR 12 FEET FOR A DOUBLE GATE.

   9.B. GATES SHALL BE OF THE SWINGING OR SLIDING TYPE.

   9.C. CONSTRUCTION OF GATES SHALL BE OF MATERIAL THAT ALLOW MANUAL OPERATION BY ONE PERSON.

   9.D. GATE COMPONENTS SHALL BE MAINTAINED IN AN OPERATIVE CONDITION AT ALL TIMES AND REPLACED OR REPAIRED WHEN DEFECTIVE.

   9.E. ELECTRIC GATES SHALL BE EQUIPPED WITH A MEANS OF OPENING THE GATE BY FIRE DEPARTMENT PERSONAL FOR EMERGENCY ACCESS. EMERGENCY OPENING DEVICES SHALL BE APPROVED BY THE FIRE CODE OFFICIAL.

   9.F. MANUAL OPENING GATES SHALL NOT BE LOCKED WITH A PADLOCK OR CHAIN AND PADLOCK UNLESS THEY HAVE A KEY BOX CONTAINING THE KEY(S) TO THE LOCK IS INSTALLED AT THE GATE LOCATION.

   9.G. LOCKING DEVICE SPECIFICATIONS SHALL BE SUBMITTED FOR APPROVAL BY THE FIRE CODE OFFICIAL.

10. SIGNS. WHERE REQUIRED BY THE FIRE CODE OFFICIAL, FIRE APPARATUS ACCESS ROADS SHALL BE MARKED WITH PERMANENT "NO PARKING- FIRE LANE" SIGNS COMPLYING WITH THE MANUAL ON UNIFORM TRAFFIC CONTROL DEVICES 2009 EDITION OR CURRENT EDITION. SIGNS SHALL HAVE A MINIMUM DIMENSION OF 12 INCHES WIDE BY 18 INCHES HIGH AND HAVE RED LETTERS ON A WHITE REFLECTIVE BACKGROUND. SIGNS SHALL BE POSTED ON ONE OR BOTH SIDES OF THE FIRE APPARATUS ROAD AS REQUIRED.

   10.A. ROADS OR ALLEYS 20 TO 26 FEET WIDE SHALL BE POSTED ON BOTH SIDES AS A FIRE LANE. 1 1

   10.B. ROADS 26 TO 32 FEET WIDE SHALL BE POSTED ON ONE SIDE OF THE ROAD (FIRE HYDRANT SIDE) WITH 150 FOOT SPACING.

   10.C. ANY QUESTIONS PLEASE CALL FIRE CODE OFFICIAL @ 801-824-3719 1

6/25/2024 3:19 PM Q:\ENGINEERING\STANDARDS\CITY STANDARDS\WORKING EDITION\CAD\SECTION 6 STANDARD DRAWINGS\02 - RD\RD-07A.DWG

NO.	REVISION DESCRIPTION	D-TE
1	2024 ST-ND-RDS UPD-TE	6/25/2024

THIS DOCUMENT -ND -NY ILLUSTR-TIONS HEREON -RE PROVIDED -S ST-ND-RD CONSTRUCTION DET-ILS WITHIN HERRIM-N CITY. DEVI-TION FROM THIS DOCUMENT REQUIRES -PPROV-L OF HERRIM-N CITY. HERRIM-N CITY C-NNOT BE HELD LI-BLE FOR MISUSE OR CH-NGES REG-RDING THIS DOCUMENT.

HERRIMAN CITY

HERRIMAN CITY
ENGINEERING DEPARTMENT
ROADWAY
FIRE APPARATUS ACCESS ROADS

RD-07A

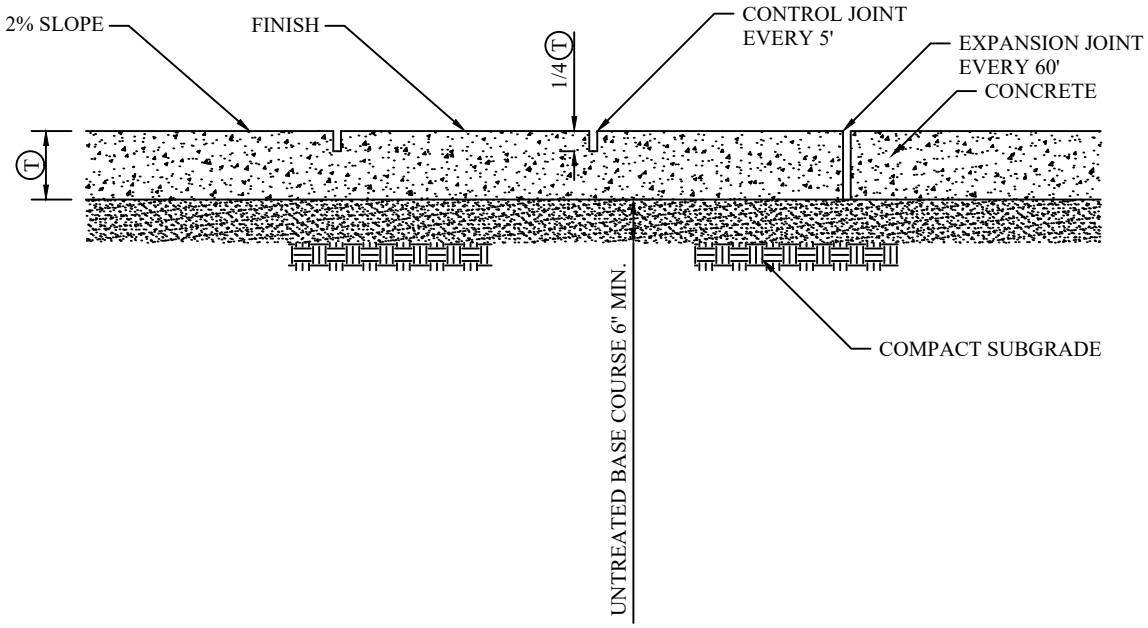

STREET TYPE	(T)
RESIDENTIAL (WITH PARK STRIP)	6"
RESIDENTIAL (NO PARK STRIP)	6"
OTHER	
REPLACEMENTS	MATCH EXISTING 6" MIN.

SEE DRIVEWAY APPROACH PLANS FOR
SIDEWALK THICKNESS AT DRIVEWAYS
FOLLOW APWA PLAN NO. 231

6/7/2024 12:19 PM Q:\ENGINEERING\STANDARDS\CITY STANDARDS\WORKING EDITION\CAD\SECTION 6 STANDARD DRAWINGS\RD\RD-08.DWG

NO.	REVISION DESCRIPTION	DATE

THIS DOCUMENT AND ANY ILLUSTRATIONS HEREON ARE PROVIDED AS STANDARD CONSTRUCTION DETAILS WITHIN HERRIMAN CITY. DEVIATION FROM THIS DOCUMENT REQUIRES APPROVAL OF HERRIMAN CITY. HERRIMAN CITY CANNOT BE HELD LIABLE FOR MISUSE OR CHANGES REGARDING THIS DOCUMENT.

HERRIMAN CITY

HERRIMAN CITY
ENGINEERING DEPARTMENT
ROADWAY
CONCRETE SIDEWALK

RD-08

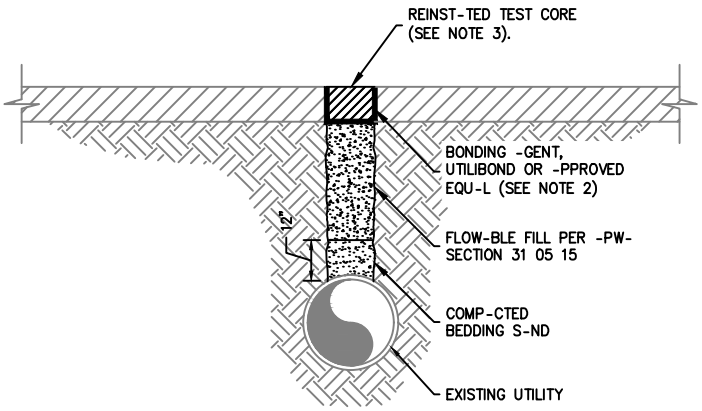

NOTES:

1. CONTR-CTOR SH-LL COMPLY WITH TEST HOLE REP-IR SPECIFIC-TIONS OUTLINED IN HERRIM-N CITY ST-ND-RDS CH-PTER 5 SECTION 32 01 18.
2. SEE T-BLE 1 IN TEST HOLE REP-IR SPECIFIC-TIONS FOR BONDING -GENT REQUIREMENTS.
3. TEST HOLE CORE DI-METER SH-LL BE - MINIMUM OF 6 INCHES -ND - M-XIMUM OF 18 INCHES.

TEST HOLE REPAIR

NTS

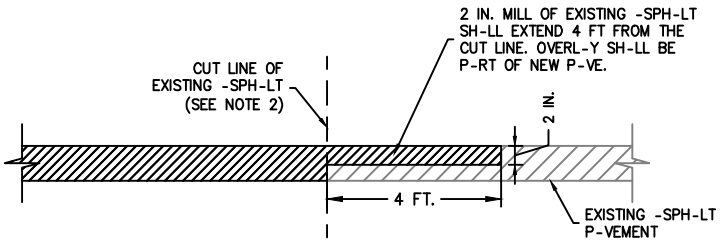

NOTES:

1. THIS DET-IL SH-LL -PPLY TO CONNECTION TO -LL EXISTING -SPH-LT EDGES, INCLUDING BUT NOT LIMITED TO UTILITY TRENCHES, PH-SE LINES, CURB CUTS ETC.
2. CUT LINE SH-LL BE M-DE WITH DI-MOND CUTTING 2 FT FROM THE EXISTING EDGE OF -SPH-LT.
3. -DDITION-L P-VEMENT REMOV-L: REMOVE -DDITION-L P-VEMENT TO - P-INTED L-NE STRIPE, - LIP OF GUTTER, - CURB, -N EXISTING P-VEMENT P-TCH, OR -N EDGE OF P-VEMENT IF SUCH - FE-TURE IS WITHIN 2' OF THE SECOND S-W-CUT. IF MORE TH-N 50% OF THE PERM-NENT SURF-CING OF - TR-VELED L-NE IS IMP-CTED BY THE EXC-V-TION, THE ENTIRE L-NE WIDTH SH-LL BE S-W-CUT, REMOVED, -ND REPL-CED.
4. T-CK CO-T: FULL T-CK CO-T COVER-GE ON -LL VERTIC-L SURF-CES PER SECTION 32 12 14.
5. -SPH-LT P-VEMENT: USE -SPH-LT H.M.- SPECIFIED IN SECTION 32 12 05 -ND SECTION 32 12 03.
   -) INST-LL IN LIFTS NO GRE-TER TH-N 3" -FTER COMP-CTION.
   B) COMP-CT E-CH LIFT IN CONFORM-NCE WITH SECTION 32 12 03.
   C) PL-NE OFF SURF-CE DISTORTIONS TH-T EXCEED 1/4" DEVI-TION IN 10'. CO-T PL-NED SURF-CES WITH - C-TIONIC OR
   D) -NIONIC EMULSION -S -PPROVED BY CITY ENGINEER.
   E) USE 1/2" GR-D-TION PER SECTION 32 12 05.
6. CR-CK SE-L TRENCH JOINTS
7. EQUIPMENT: -LL -SPH-LT P-VEMENT SH-LL BE INST-LLED WITH MECH-NIC-L P-VING EQUIPMENT UNLESS OTHERWISE -PPROVED BY THE CITY ENGINEER.

CONNECTION TO EXISTING ASPHALT EDGE

NTS

NO.	REVISION DESCRIPTION	D-TE
1	NEW DR-WING -DDED TO ST-ND-RDS	6/5/2024

THIS DOCUMENT -ND -NY ILLUSTR-TIONS HEREON -RE PROVIDED -S ST-ND-RD CONSTRUCTION DET-ILS WITHIN HERRIM-N CITY. DEVI-TION FROM THIS DOCUMENT REQUIRES -PPROV-L OF HERRIM-N CITY. HERRIM-N CITY C-NNOT BE HELD LI-BLE FOR MISUSE OR CH-NGES REG-RDING THIS DOCUMENT.

HERRIMAN CITY

HERRIMAN CITY
ENGINEERING DEPARTMENT
ROADWAY
ASPHALT CONNECTION & REPAIR DETAILS

RD-09

6/7/2024 12:21 PM Q:\ENGINEERING\STANDARDS\CITY STANDARDS\WORKING EDITION\CAD\SECTION 6 STANDARD DRAWINGS\RD\RD-09.DWG

APEX BIDIRECTIONAL CURB RAMP DETAIL

CLEAR SPACE/GUTTER AREA

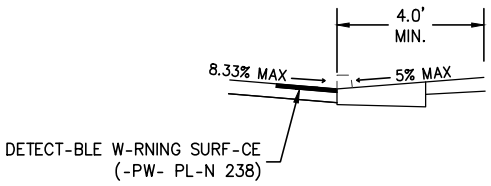

T-BLE OF DIMMENSIONS			
ELEMENT	RUNNING SLOPE M-X (%)	CROSS SLOPE M-X (%)	MIN. WIDTH (FT)
(R)	8.33	2	4
(T)	2	2	4 x 4
(F)	25	--	2
(C)	5	2	4 x 4

GENER-L NOTE: -LL WORK SH-LL BE INST-LLED IN THE RO-D RIGHT-OF-W-Y

NO.	REVISION DESCRIPTION	D-TE
1	NEW DR-WNG -DDED TO ST-ND-RDS	6/5/2024

THIS DOCUMENT -ND -NY ILLUSTR-TIONS HEREON -RE PROVIDED -S ST-ND-RD CONSTRUCTION DET-ILS WITHIN HERRIM-N CITY. DEVI-TION FROM THIS DOCUMENT REQUIRES -PPROV-L OF HERRIM-N CITY. HERRIM-N CITY C-NNOT BE HELD LI-BLE FOR MISUSE OR CH-NGES REG-RDING THIS DOCUMENT.

HERRIMAN CITY
ENGINEERING DEPARTMENT
ROADWAY
APEX BIDIRECTIONAL ADA RAMP

RD-10

DIRECTIONAL CURB RAMP DETAIL

CLEAR SPACE/GUTTER AREA

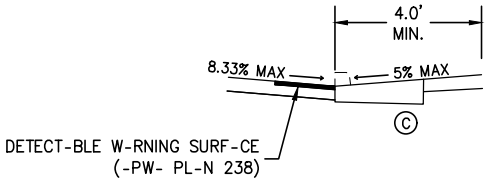

T-BLE OF DIMMENSIONS			
ELEMENT	RUNNING SLOPE M-X (%)	CROSS SLOPE M-X (%)	MIN. WIDTH (FT)
Ⓡ	8.33	2	4
Ⓣ	2	2	4 x 4
Ⓕ	25	--	2
Ⓒ	5	2	4 x 4

NOTES:

1. -LL WORK SH-LL BE INST-LLED IN THE RO-D RIGHT-OF-W-Y
2. -LTERN-TIVE DIRECTION-L R-MP DESIGNS M-Y BE -PPROVED BY CITY ENGINEER IF RIGHT OF W-Y LIMIT-TIONS OR SITE CONDITIONS REQUIRE IT

NO.	REVISION DESCRIPTION	D-TE
⚠	NEW DR-WNG -DDED TO ST-ND-RDS	6/5/2024

THIS DOCUMENT -ND -NY ILLUSTR-TIONS HEREON -RE PROVIDED -S ST-ND-RD CONSTRUCTION DET-ILS WITHIN HERRIM-N CITY. DEVI-TION FROM THIS DOCUMENT REQUIRES -PPROV-L OF HERRIM-N CITY. HERRIM-N CITY C-NNOT BE HELD LI-BLE FOR MISUSE OR CH-NGES REG-RDING THIS DOCUMENT.

HERRIMAN CITY
ENGINEERING DEPARTMENT
ROADWAY
DIRECTIONAL ADA RAMP

RD-11

PARTS LIST	
DESCRIPTION	PART NUMBER
LIGHT FIXTURE	HADCO #S8512JA3R7730140A21SNNNA
POLE	MSL #16'OH/12'AGRTS/3-5.25
DECORATIVE BASE	MSL #22"HX16"W VIRG/HERRIMAN/HH/GL/BK
CONCRETE MOW STRIP	MSL #CMS24X
PHOTOCELL	MSL #RD8645BK

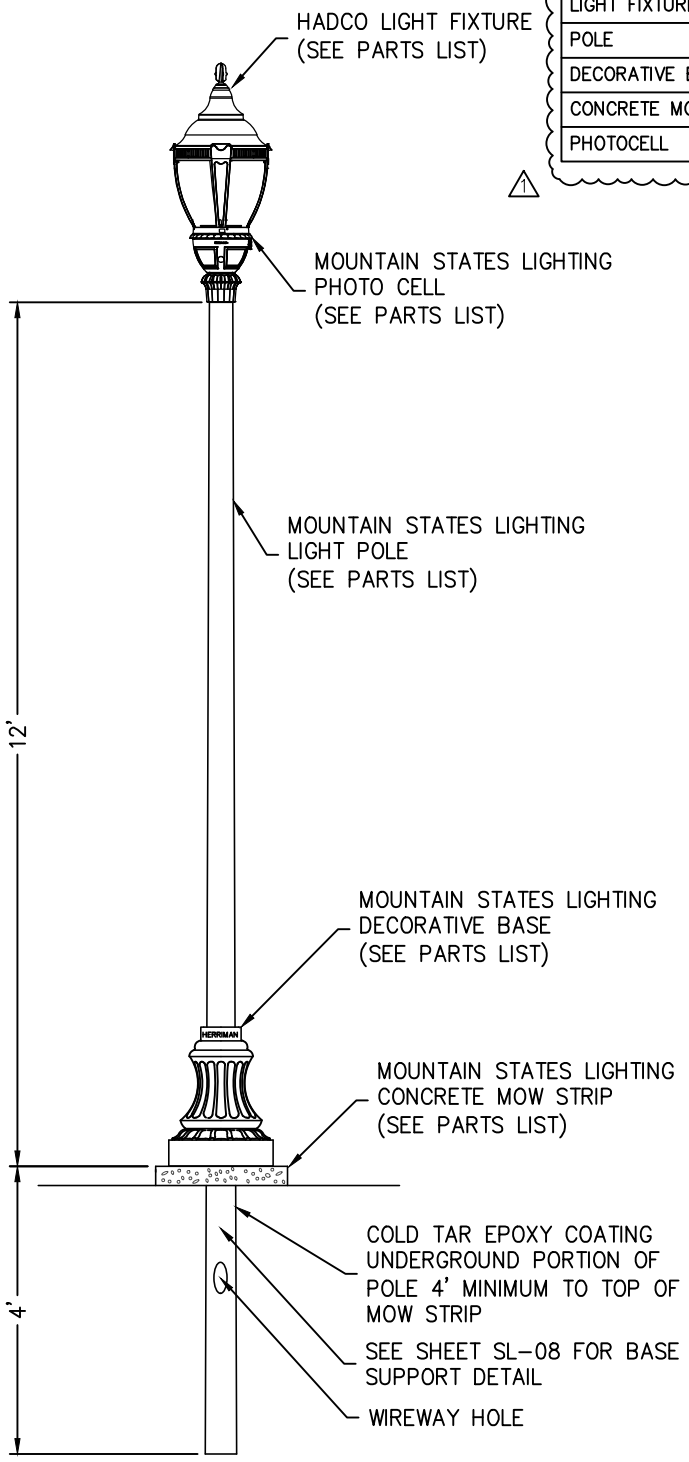

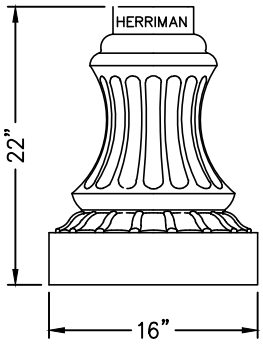

ENLARGED BASE DETAIL

NO.	REVISION DESCRIPTION	DATE
1	2024 STANDARDS UPDATE	11/01/2022

THIS DOCUMENT AND ANY ILLUSTRATIONS HEREON ARE PROVIDED AS STANDARD CONSTRUCTION DETAILS WITHIN HERRIMAN CITY. DEVIATION FROM THIS DOCUMENT REQUIRES APPROVAL OF HERRIMAN CITY. HERRIMAN CITY CANNOT BE HELD LIABLE FOR MISUSE OR CHANGES REGARDING THIS DOCUMENT.

HERRIMAN CITY

HERRIMAN CITY
ENGINEERING DEPARTMENT
STREET LIGHTING
RESIDENTIAL STREET LIGHT

SL-01

6/21/2024 8:08 AM Q:\ENGINEERING\STANDARDS\CITY STANDARDS\WORKING EDITION\CAD\SECTION 6 STANDARD DRAWINGS\SL\SL-01 LED RESI.DWG

P-RTS LIST	
DESCRIPTION	P-RT NUMBER
LIGHT FIXTURE	H-DCO #S5812J-3R7730140-21SNNN-
POLE	MSL #14EF--5.0-3X3TT-BK
DECOR-TIVE B-SE	MSL #FR-NK-17"X40"-HDEB(HERRIM-N)-BK
-NCHOR BOLTS	MSL #3/4"X18"G-LV
PHOTOCELL	MSL #RD8645BK

1

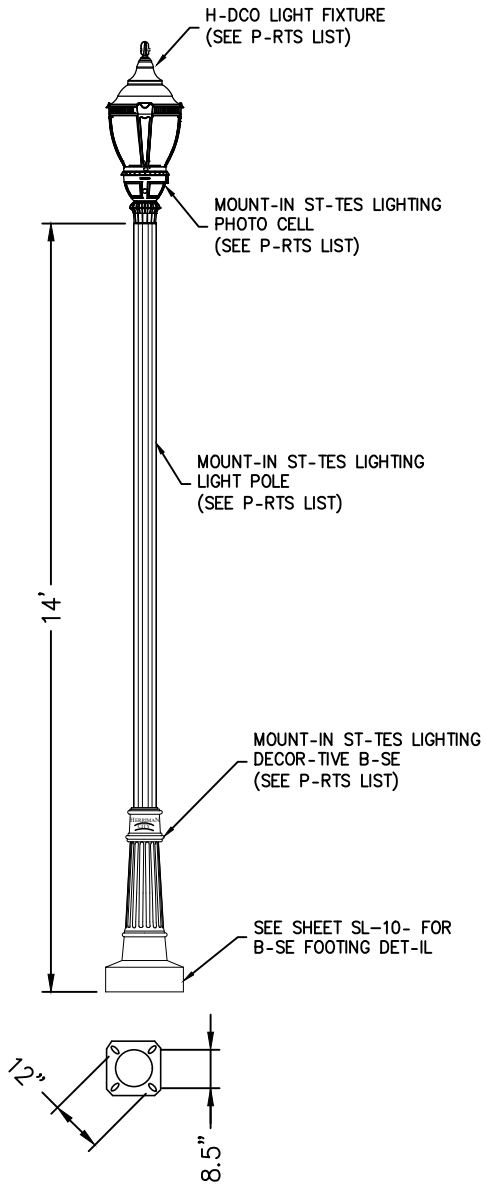

ANCHOR BASE DETAIL 12" BOLT CIRCLE
(SEE PARTS LIST FOR ANCHOR BOLTS)

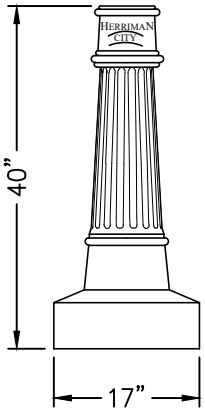

DECORATIVE BASE
ENLARGED BASE DETAIL

NO.	REVISION DESCRIPTION	D-TE
1	2024 ST-ND-RDS UPD-TE	11/01/2022

THIS DOCUMENT AND ANY ILLUSTRATIONS HEREON ARE PROVIDED AS STANDARD CONSTRUCTION DETAILS WITHIN HERRIMAN CITY. DEVIATION FROM THIS DOCUMENT REQUIRES APPROVAL OF HERRIMAN CITY. HERRIMAN CITY CANNOT BE HELD LIABLE FOR MISUSE OR CHANGES REGARDING THIS DOCUMENT.

HERRIMAN CITY

HERRIMAN CITY
ENGINEERING DEPARTMENT
STREET LIGHTING
TOWNE CENTER POST TOP STREET LIGHT

SL-01A

6/21/2024 8:10 AM Q:\ENGINEERING\STANDARDS\CITY STANDARDS\WORKING EDITION\CAD\SECTION 6 STANDARD DRAWINGS\SL\SL-01A TOWN CENTER RESI.DWG

P-RTS LIST	
DESCRIPTION	P-RT NUMBER
LIGHT FIXTURE	H-DCO #S5812J-3R7730140-21SNNN-
POLE	MSL #8EF--5.0-3X3TT-BK
DECOR-TIVE B-SE	MSL #FR-NK-10"X34"-HDEB(HERRIM-N)-BK
-NCHOR BOLTS	MSL #3/4"X18"G-LV
PHOTOCELL	MSL #RD8645BK

1

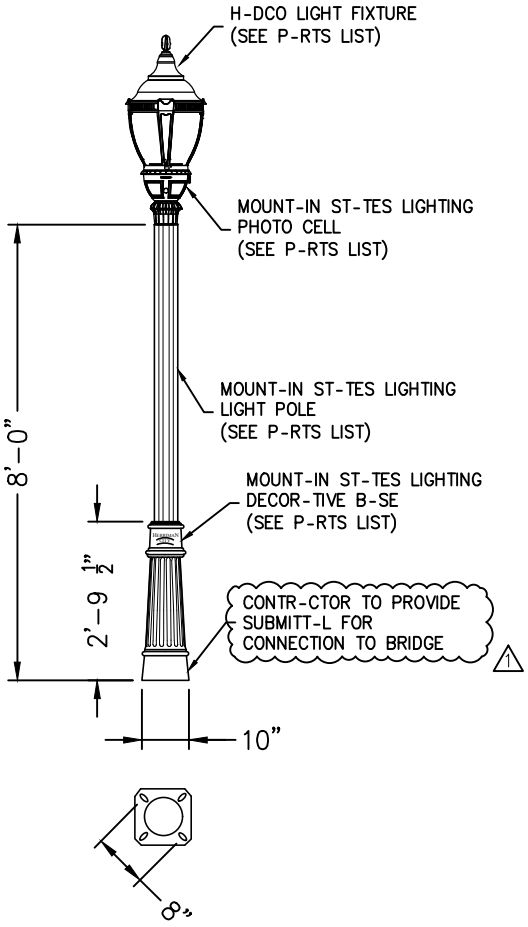

ANCHOR BASE DETAIL 8" BOLT CIRCLE
(SEE PARTS LIST FOR ANCHOR BOLTS)

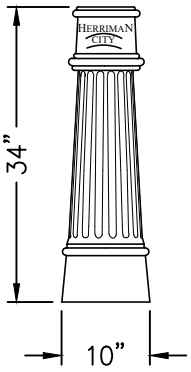

DECORATIVE BASE
ENLARGED BASE DETAIL

NO.	REVISION DESCRIPTION	D-TE
1	2024 ST-ND-RDS UPD-TE	11/01/2022

THIS DOCUMENT AND ANY ILLUSTRATIONS HEREON ARE PROVIDED AS STANDARD CONSTRUCTION DETAILS WITHIN HERRIMAN CITY. DEVIATION FROM THIS DOCUMENT REQUIRES APPROVAL OF HERRIMAN CITY. HERRIMAN CITY CANNOT BE HELD LIABLE FOR MISUSE OR CHANGES REGARDING THIS DOCUMENT.

HERRIMAN CITY

HERRIMAN CITY
ENGINEERING DEPARTMENT
STREET LIGHTING
POST TOP BRIDGE STREETLIGHT

SL-01B

6/21/2024 8:16 AM Q:\ENGINEERING\STANDARDS\CITY STANDARDS\WORKING EDITION\CAD\SECTION 6 STANDARD DRAWINGS\SL\SL-01B BRIDGE LIGHTING.DWG

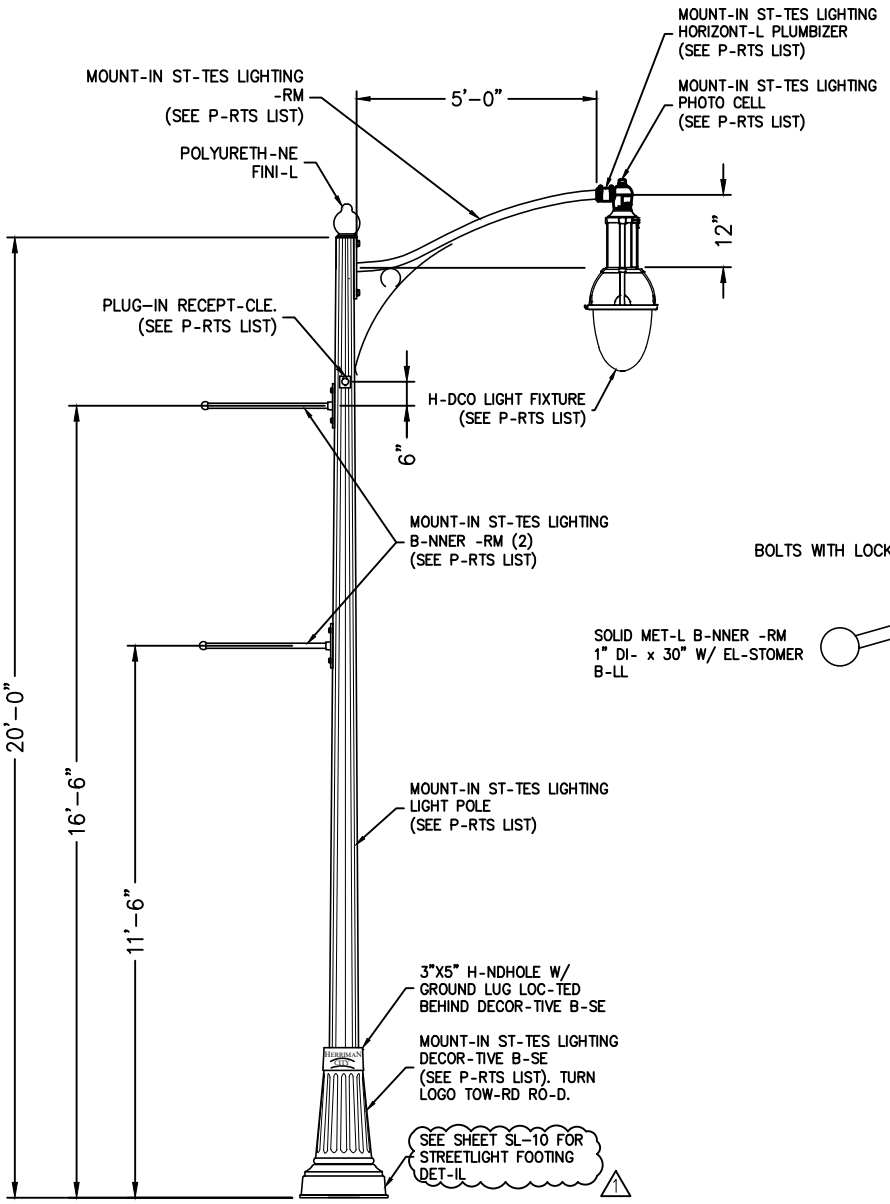

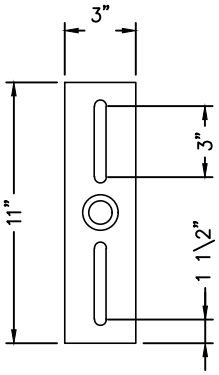

SLOTTED B-NNER PL-TE DET-IL

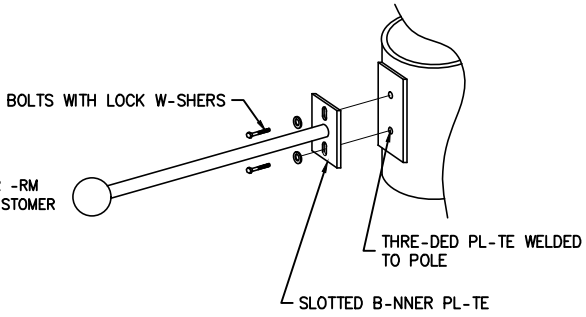

B-NNER -RM -TT-CHMENT DET-IL

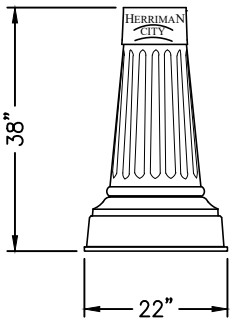

ENL-RGED DECOR-TIVE B-SE DET-IL

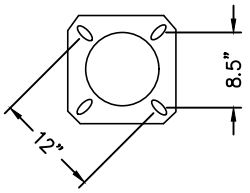

-NCHOR B-SE DET-IL 12" BOLT CIRCLE
(SEE P-RTS LIST FOR -NCHOR BOLTS)

P-RTS LIST	
DESCRIPTION	P-RT NUMBER
LIGHT FIXTURE	H-DCO #S8512M-3NN73032-10SNNN-
POLE	MSL #20TFS-7.8/4.4-(2)SB--BK
-RM	MSL #5'SS-/18"R-BK
HORIZ. PLUMIZER	MSL #HPWPC
B-NNER -RM (2)	MSL #SB--30"
DECOR-TIVE B-SE	MSL #22"DI-.X38"HIGH M-DISON(HERRIM-N)-BK
-NCHOR BOLTS	MSL #3/4"X18"G-LV
PHOTOCELL	MSL #RD8645BK
PLUG-IN RECEPT-CLE	120 V DUPLEX -ND GFCI WITH WE-THER COVER

1

NO.	REVISION DESCRIPTION	D-TE
1	2024 ST-ND-RDS UPD-TE	11/01/2022

THIS DOCUMENT AND ANY ILLUSTRATIONS HEREON ARE PROVIDED AS STANDARD CONSTRUCTION DETAILS WITHIN HERRIMAN CITY. DEVIATION FROM THIS DOCUMENT REQUIRES APPROVAL OF HERRIMAN CITY. HERRIMAN CITY CANNOT BE HELD LIABLE FOR MISUSE OR CHANGES REGARDING THIS DOCUMENT.

HERRIMAN CITY

HERRIMAN CITY
ENGINEERING DEPARTMENT
STREET LIGHTING
SINGLE ARTERIAL STREET LIGHT STANDARD

SL-02

1/20/20 Q:\ENGINEERING\STANDARDS\CITY STANDARDS\WORKING EDITION\CAD\SECTION 6 STANDARD DRAWINGS\SL\SL-02 LED ARTERIAL.DWG

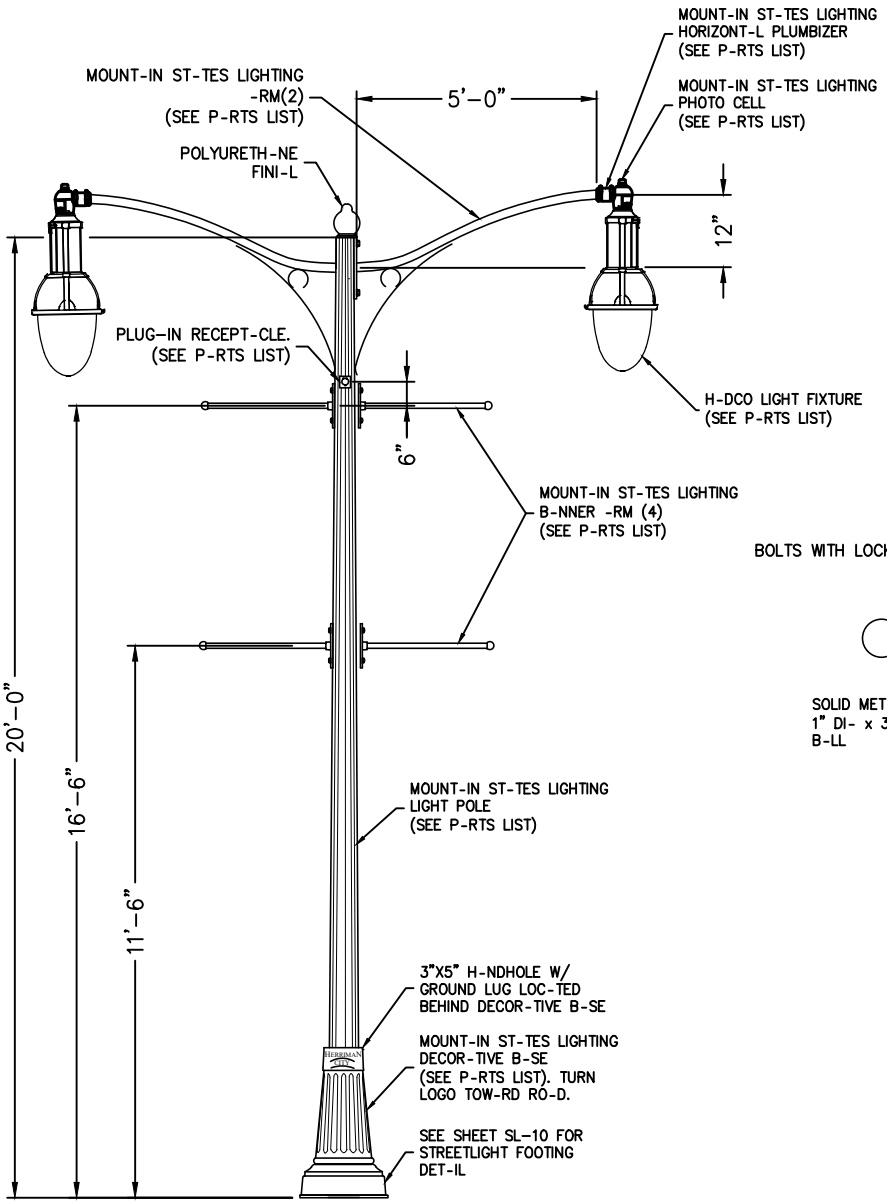

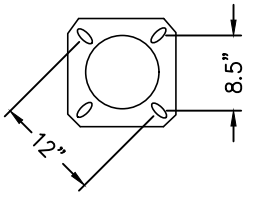

-NCHOR B-SE DET-IL 12" BOLT CIRCLE
(SEE P-RTS LIST FOR -NCHOR BOLTS)

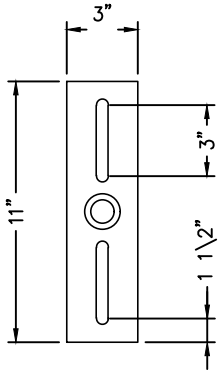

SLOTTED B-NNER PL-TE DET-IL

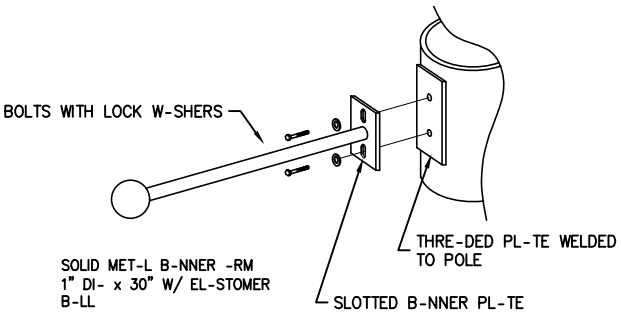

B-NNER -RM -TT-CHMENT DET-IL

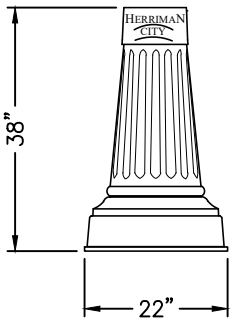

ENL-RGED DECOR-TIVE B-SE DET-IL

P-RTS LIST	
DESCRIPTION	P-RT NUMBER
LIGHT FIXTURE	H-DCO #S8512M-3NN73032-10SNNN-
POLE	MSL #20TFS-7.8/4.4-(2)SB--BK
-RM (2)	MSL #5'SS-/18"R-BK
HORIZ. PLUMIZER	MSL #HPWPC
B-NNER -RM (4)	MSL #SB--30"
DECOR-TIVE B-SE	MSL #22"DI-.X38"HIGH M-DISON(HERRIM-N)-BK
-NCHOR BOLTS	MSL #3/4"X18"G-LV
PHOTOCELL	MSL #RD8645BK
PLUG-IN RECEPT-CLE	120 V DUPLEX -ND GFCI WITH WE-THER COVER

1

NO.	REVISION DESCRIPTION	D-TE
1	2024 ST-ND-RDS UPD-TE	11/01/2022

THIS DOCUMENT -ND -NY ILLUSTR-TIONS HEREON -RE PROVIDED -S ST-ND-RD CONSTRUCTION DET-ILS WITHIN HERRIM-N CITY. DEVI-TION FROM THIS DOCUMENT REQUIRES -PPROV-L OF HERRIM-N CITY. HERRIM-N CITY C-NNOT BE HELD LI-BLE FOR MISUSE OR CH-NGES REG-RDING THIS DOCUMENT.

HERRIMAN CITY

HERRIMAN CITY
ENGINEERING DEPARTMENT
STREET LIGHTING
DOUBLE ARTERIAL STREET LIGHT STANDARD

SL-02A

6/21/2024 8:28 AM Q:\ENGINEERING\STANDARDS\CITY STANDARDS\WORKING EDITION\CAD\SECTION 6 STANDARD DRAWINGS\SL\SL-02A LED ARTERIAL.DWG

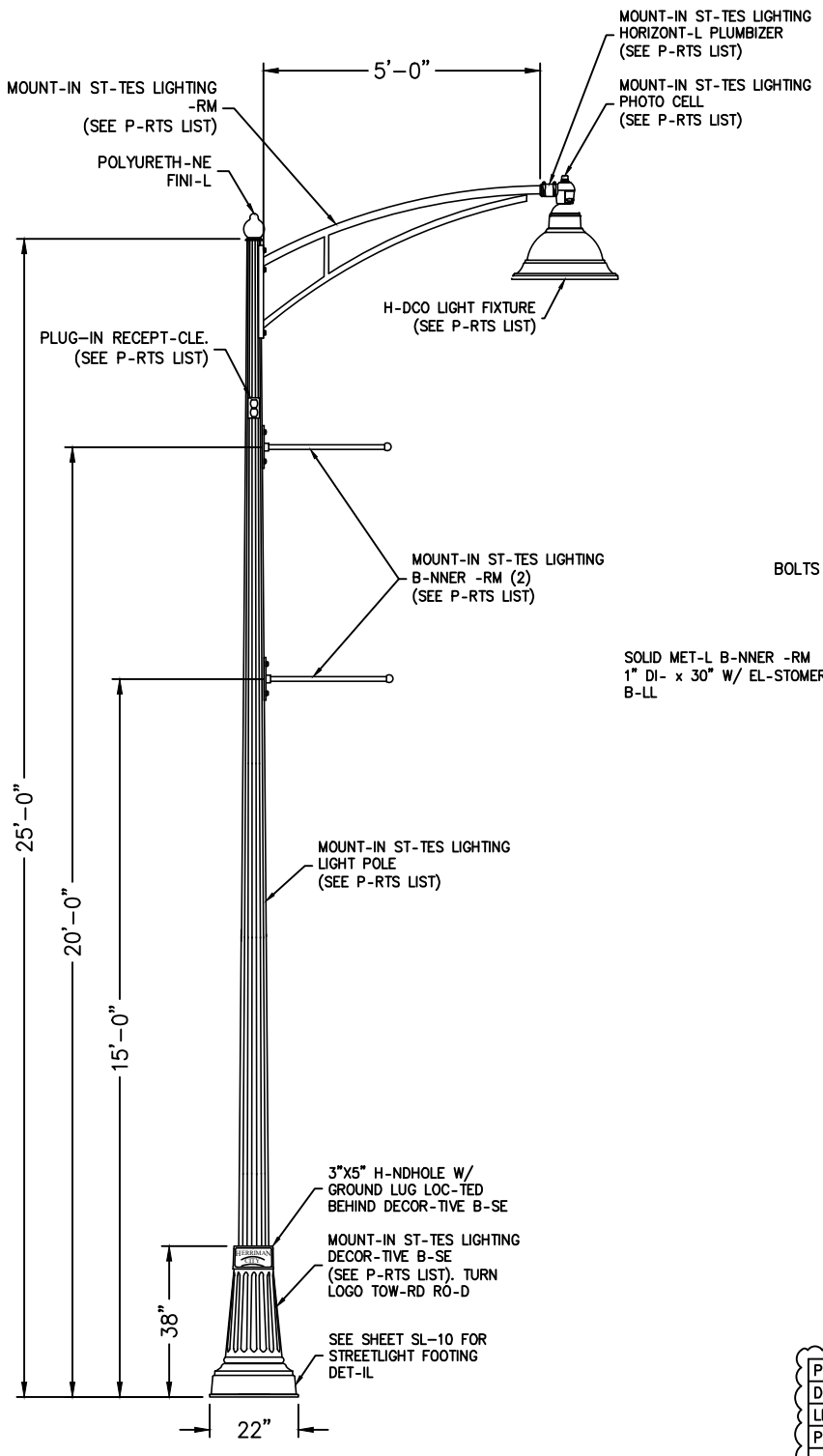

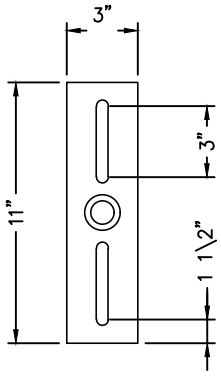

SLOTTED B-NNER PL-TE DET-IL

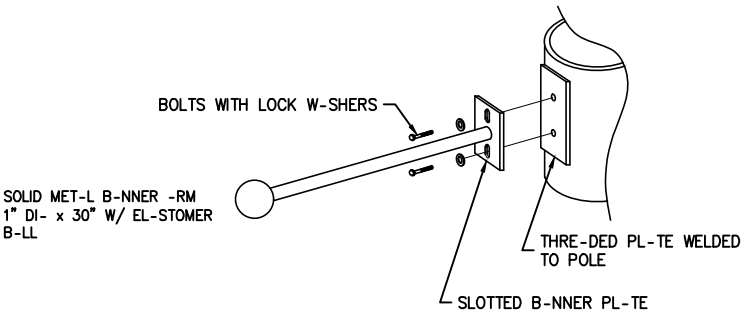

B-NNER -RM -TT-CHMENT DET-IL

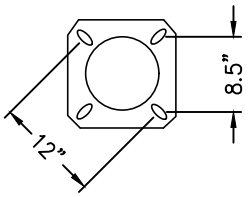

-NCHOR B-SE DET-IL 12" BOLT CIRCLE
(SEE P-RTS LIST FOR -NCHOR BOLTS)

P-RTS LIST	
DESCRIPTION	P-RT NUMBER
LIGHT FIXTURE	H-DCO #S8512M-3NN73032-10SNNN-
POLE	MSL #20TFS-7.8/4.4-(2)SB--BK
-RM (2)	MSL #5'SS-/18"R-BK
HORIZ. PLUMIZER	MSL #HPWPC
B-NNER -RM (2)	MSL #SB--30"
DECOR-TIVE B-SE	MSL #22"DI-.X38"HIGH M-DISON(HERRIM-N)-BK
-NCHOR BOLTS	MSL #3/4"X18"G-LV
PHOTOCELL	MSL #RD8645BK
PLUG-IN RECEPT-CLE	120 V DUPLEX -ND GFCI WITH WE-THER COVER

1

NO.	REVISION DESCRIPTION	D-TE
1	2024 ST-ND-RDS UPD-TE	11/01/2022

THIS DOCUMENT -ND -NY ILLUSTR-TIONS HEREON -RE PROVIDED -S ST-ND-RD CONSTRUCTION DET-ILS WITHIN HERRIM-N CITY. DEVI-TION FROM THIS DOCUMENT REQUIRES -PPROV-L OF HERRIM-N CITY. HERRIM-N CITY C-NNOT BE HELD LI-BLE FOR MISUSE OR CH-NGES REG-RDING THIS DOCUMENT.

HERRIMAN CITY

HERRIMAN CITY
ENGINEERING DEPARTMENT
STREET LIGHTING
25' SINGLE ARM CITY PARKING LOT POLE

SL-03

6/21/2024 8:36 AM Q:\ENGINEERING\STANDARDS\CITY STANDARDS\WORKING EDITION\CAD\SECTION 6 STANDARD DRAWINGS\SL\SL-03 CITY PARKING.DWG

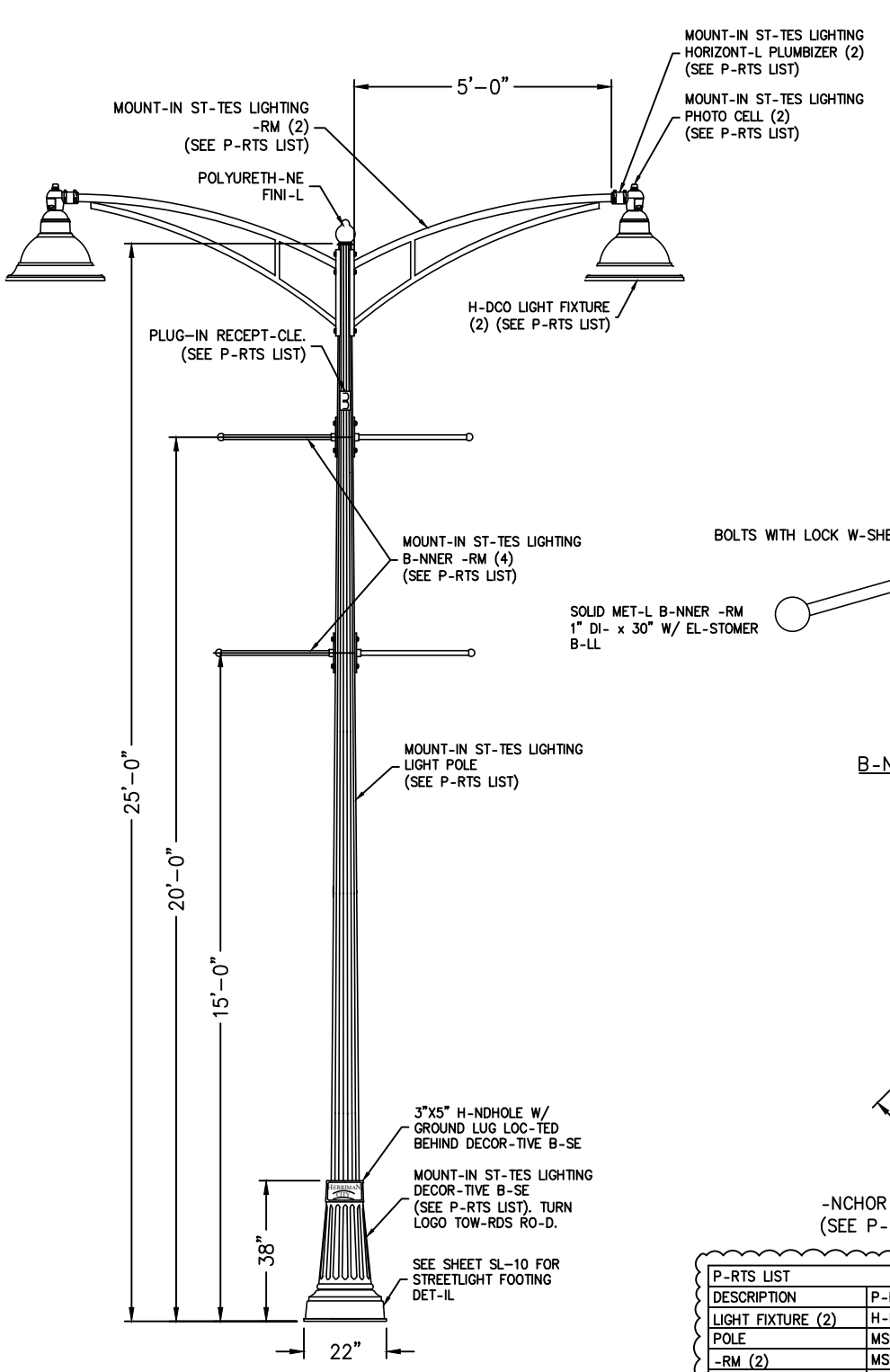

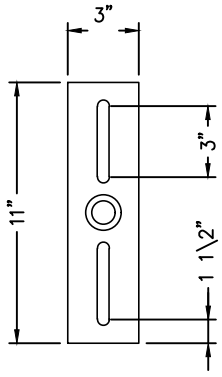

SLOTTED B-NNER PL-TE DET-IL

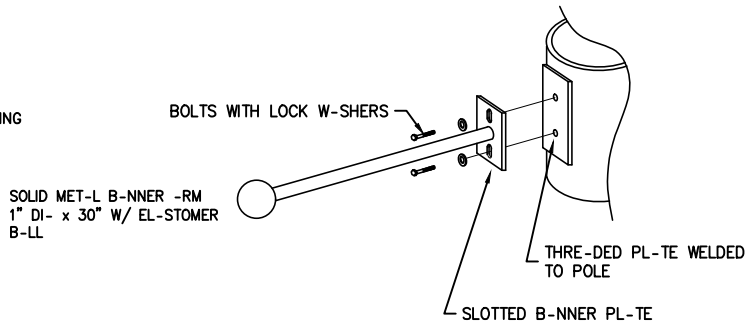

B-NNER -RM -TT-CHMENT DET-IL

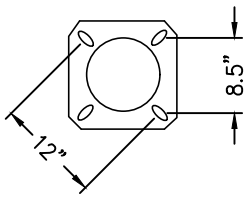

-NCHOR B-SE DET-IL 12" BOLT CIRCLE
(SEE P-RTS LIST FOR -NCHOR BOLTS)

P-RTS LIST	
DESCRIPTION	P-RT NUMBER
LIGHT FIXTURE (2)	H-DCO #S8512M-3NN73032-10SNNN-
POLE	MSL #20TFS-7.8/4.4-(2)SB--BK
-RM (2)	MSL #5'SS-/18"R-BK
HORIZ. PLUMIZER (2)	MSL #HPWPC
B-NNER -RM (4)	MSL #SB--30"
DECOR-TIVE B-SE	MSL #22"DI-.X38"HIGH M-DISON(HERRIM-N)-BK
-NCHOR BOLTS	MSL #3/4"X18"G-LV
PHOTOCELL (2)	MSL #RD8645BK
PLUG-IN RECEPT-CLE	120 V DUPLEX -ND GFCI WITH WE-THER COVER

NO.	REVISION DESCRIPTION	D-TE
⚠	2024 ST-ND-RDS UPD-TE	11/01/2022

THIS DOCUMENT -ND -NY ILLUSTR-TIONS HEREON -RE PROVIDED -S ST-ND-RD CONSTRUCTION DET-ILS WITHIN HERRIM-N CITY. DEVI-TION FROM THIS DOCUMENT REQUIRES -PPROV-L OF HERRIM-N CITY. HERRIM-N CITY C-NNOT BE HELD LI-BLE FOR MISUSE OR CH-NGES REG-RDING THIS DOCUMENT.

HERRIMAN CITY

HERRIMAN CITY
ENGINEERING DEPARTMENT
STREET LIGHTING

25' DOUBLE ARM CITY PARKING LOT POLE

SL-03A

6/21/2024 8:40 AM Q:\ENGINEERING\STANDARDS\CITY STANDARDS\WORKING EDITION\CAD\SECTION 6 STANDARD DRAWINGS\SL\SL-03A CITY PARKING.DWG

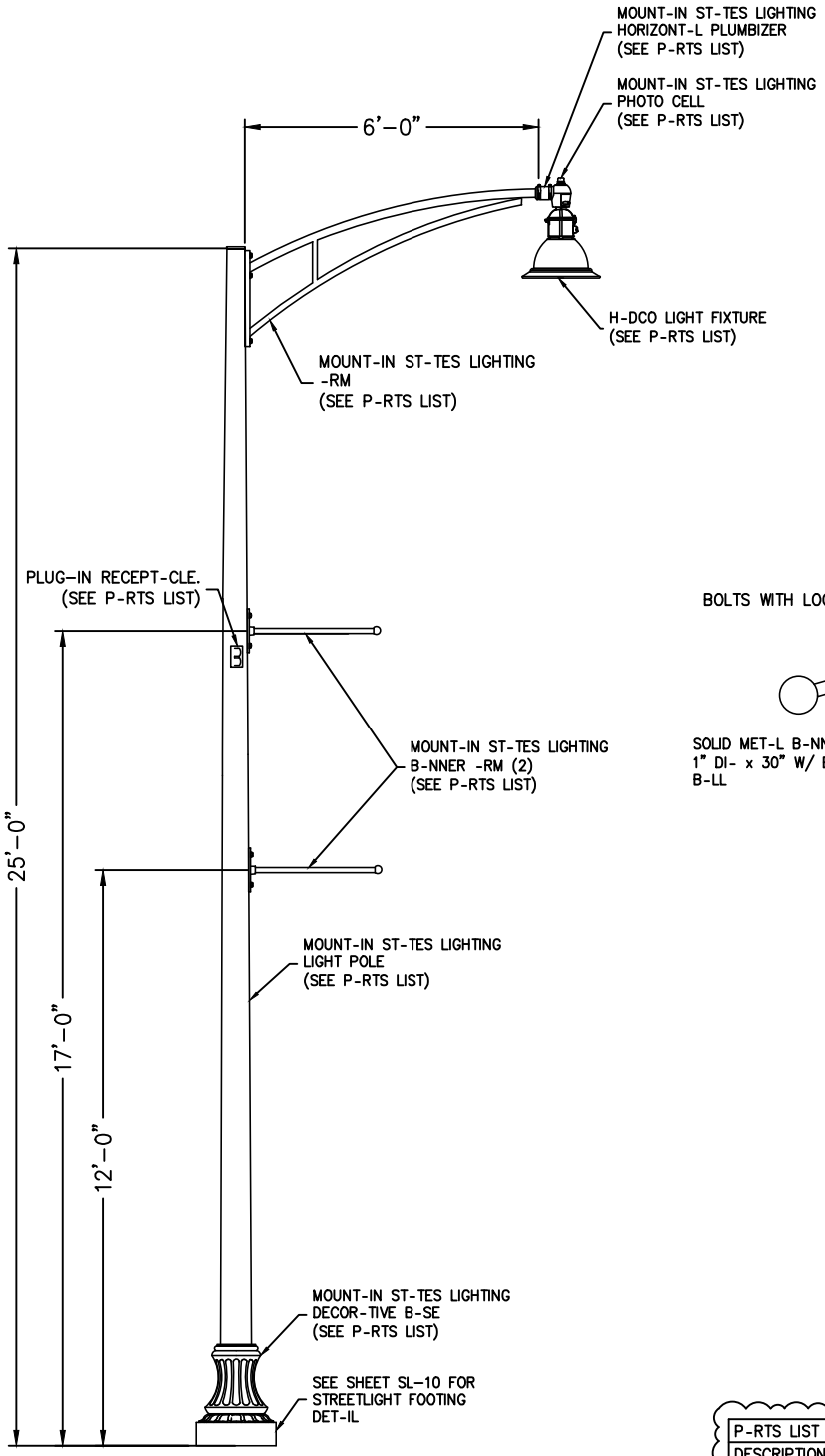

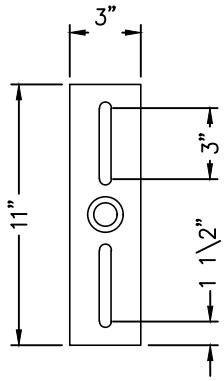

SLOTTED B-NNER PL-TE DET-IL

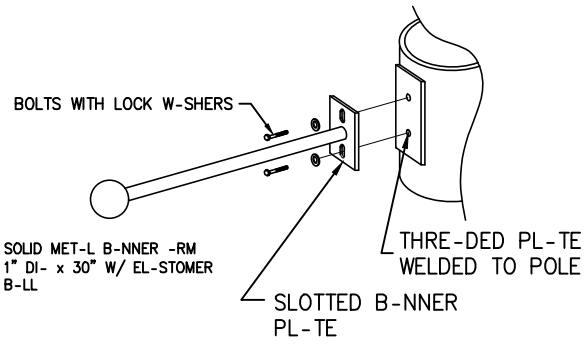

B-NNER -RM -TT-CHMENT DET-IL

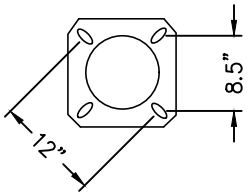

-NCHOR B-SE DET-IL 12" BOLT CIRCLE
(SEE P-RTS LIST FOR -NCHOR BOLTS)

P-RTS LIST	
DESCRIPTION	P-RT NUMBER
LIGHT FIXTURE	H-DCO #S8512M-3NN73032-10SNNN-
POLE	MSL #20TFS-7.8/4.4-(2)SB--BK
-RM	MSL #5'SS-/18"R-BK
HORIZ. PLUMIZER	MSL #HPWPC
B-NNER -RM (2)	MSL #SB--30"
DECOR-TIVE B-SE	MSL #22"DI-.X38"HIGH M-DISON(HERRIM-N)-BK
-NCHOR BOLTS	MSL #3/4"X18"G-LV
PHOTOCELL	MSL #RD8645BK
PLUG-IN RECEPT-CLE	120 V DUPLEX -ND GFCI WITH WE-THER COVER

1

NO.	REVISION DESCRIPTION	D-TE
⚠	2024 ST-ND-RDS UPD-TE	11/01/2022

THIS DOCUMENT -ND -NY ILLUSTR-TIONS HEREON -RE PROVIDED -S ST-ND-RD CONSTRUCTION DET-ILS WITHIN HERRIM-N CITY. DEVI-TION FROM THIS DOCUMENT REQUIRES -PPROV-L OF HERRIM-N CITY. HERRIM-N CITY C-NNOT BE HELD LI-BLE FOR MISUSE OR CH-NGES REG-RDING THIS DOCUMENT.

HERRIMAN CITY

HERRIMAN CITY
ENGINEERING DEPARTMENT
STREET LIGHTING
25' SINGLE ARM RETAIL POLE

SL-04

6/21/2024 8:43 AM Q:\ENGINEERING\STANDARDS\CITY STANDARDS\WORKING EDITION\CAD\SECTION 6 STANDARD DRAWINGS\SL\SL-04 RETAIL PARKING.DWG

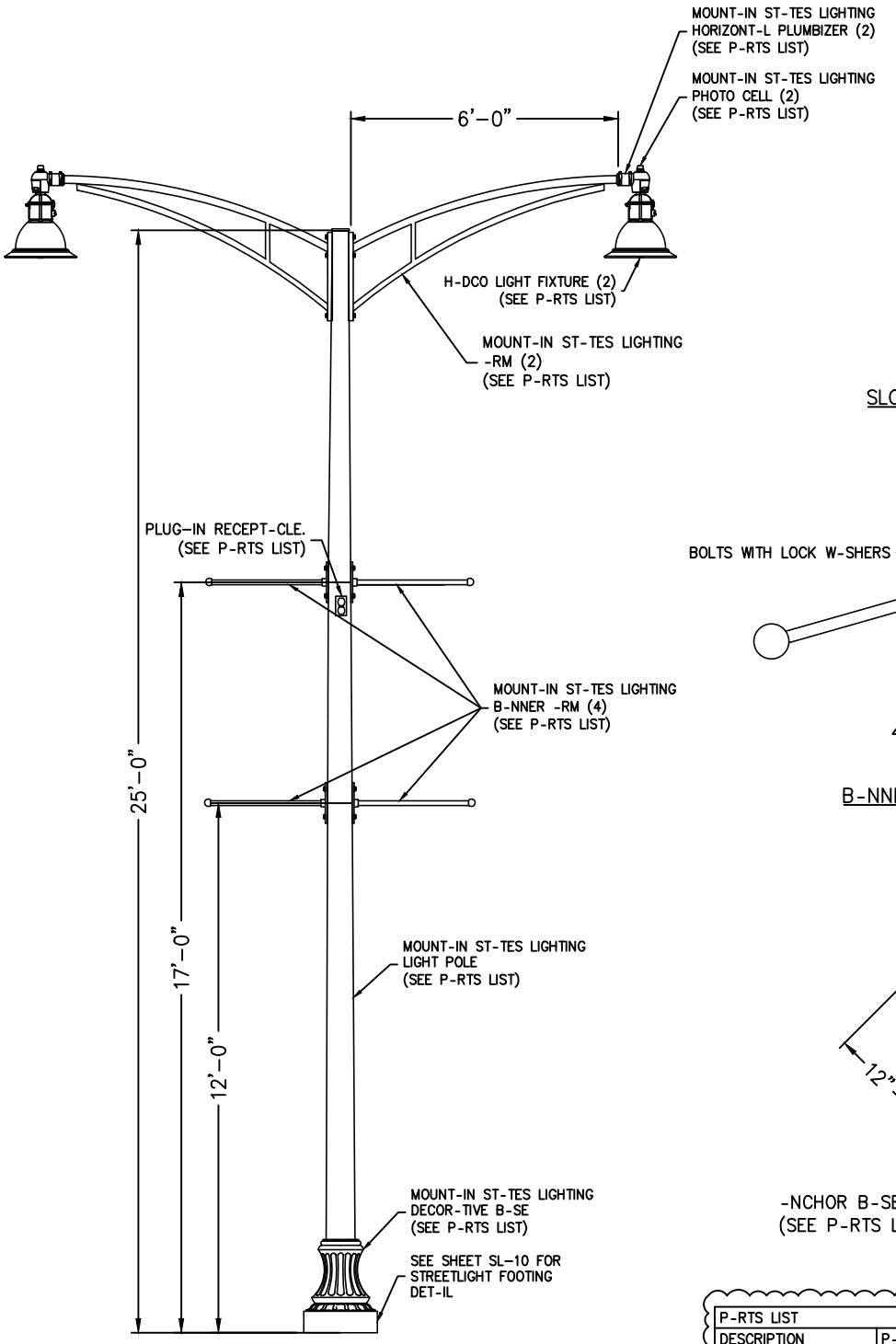

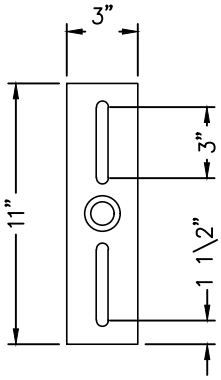

SLOTTED B-NNER PL-TE DET-IL

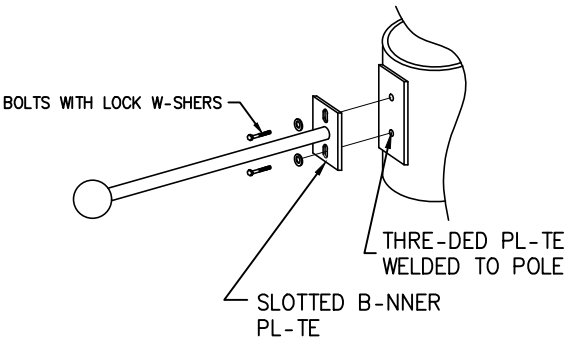

B-NNER -RM -TT-CHMENT DET-IL

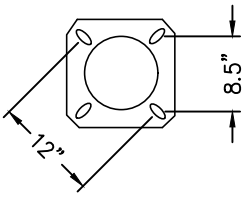

-NCHOR B-SE DET-IL 12" BOLT CIRCLE
(SEE P-RTS LIST FOR -NCHOR BOLTS)

P-RTS LIST	
DESCRIPTION	P-RT NUMBER
LIGHT FIXTURE (2)	H-DCO #S8512M-3NN73032-10SNNN-
POLE	MSL #20TFS-7.8/4.4-(2)SB--BK
-RM (2)	MSL #5'SS-/18"R-BK
HORIZ. PLUMIZER (2)	MSL #HPWPC
B-NNER -RM (4)	MSL #SB--30"
DECOR-TIVE B-SE	MSL #22"DI-.X38"HIGH M-DISON(HERRIM-N)-BK
-NCHOR BOLTS	MSL #3/4"X18"G-LV
PHOTOCELL (2)	MSL #RD8645BK
PLUG-IN RECEPT-CLE	120 V DUPLEX -ND GFCI WITH WE-THER COVER

1

NO.	REVISION DESCRIPTION	D-TE
⚠	2024 ST-ND-RDS UPD-TE	11/01/2022

THIS DOCUMENT -ND -NY ILLUSTR-TIONS HEREON -RE PROVIDED -S ST-ND-RD CONSTRUCTION DET-ILS WITHIN HERRIM-N CITY. DEVI-TION FROM THIS DOCUMENT REQUIRES -PPROV-L OF HERRIM-N CITY. HERRIM-N CITY C-NNOT BE HELD LI-BLE FOR MISUSE OR CH-NGES REG-RDING THIS DOCUMENT.

HERRIMAN CITY

HERRIMAN CITY
ENGINEERING DEPARTMENT
STREET LIGHTING
25' DOUBLE ARM RETAIL POLE

SL-04A

6/21/2024 8:47 AM Q:\ENGINEERING\STANDARDS\CITY STANDARDS\WORKING EDITION\CAD\SECTION 6 STANDARD DRAWINGS\SL\SL-04A RETAIL PARKING.DWG

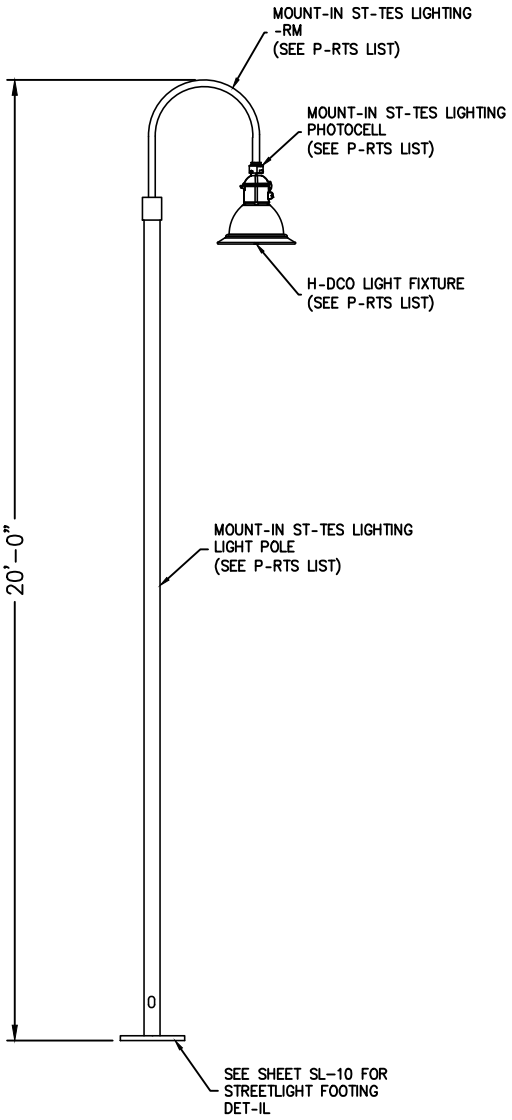

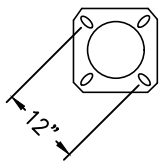

-NCHOR B-SE DET-IL 12" BOLT CIRCLE
(SEE P-RTS LIST FOR -NCHOR BOLTS)

P-RTS LIST	
DESCRIPTION	P-RT NUMBER
LIGHT FIXTURE	H-DCO #S8512M-3NN73032-10SNNN-
POLE	MSL #20TFS-7.8/4.4-(2)SB--BK
-RM	MSL #5'SS-/18"R-BK
-NCHOR BOLTS	MSL #3/4"X18"G-LV
PHOTOCELL	MSL #RD8645BK

1

NO.	REVISION DESCRIPTION	D-TE
1	2024 ST-ND-RDS UPD-TE	11/01/2022

THIS DOCUMENT -ND -NY ILLUSTR-TIONS HEREON -RE PROVIDED -S ST-ND-RD CONSTRUCTION DET-ILS WITHIN HERRIM-N CITY. DEVI-TION FROM THIS DOCUMENT REQUIRES -PPROV-L OF HERRIM-N CITY. HERRIM-N CITY C-NNOT BE HELD LI-BLE FOR MISUSE OR CH-NGES REG-RDING THIS DOCUMENT.

HERRIMAN CITY

HERRIMAN CITY
ENGINEERING DEPARTMENT
STREET LIGHTING
RETAIL SINGLE SHEPARD HOOK

SL-05

6/21/2024 8:50 AM Q:\ENGINEERING\STANDARDS\CITY STANDARDS\WORKING EDITION\CAD\SECTION 6 STANDARD DRAWINGS\SL\SL-05 SHEPARD HOOK.DWG

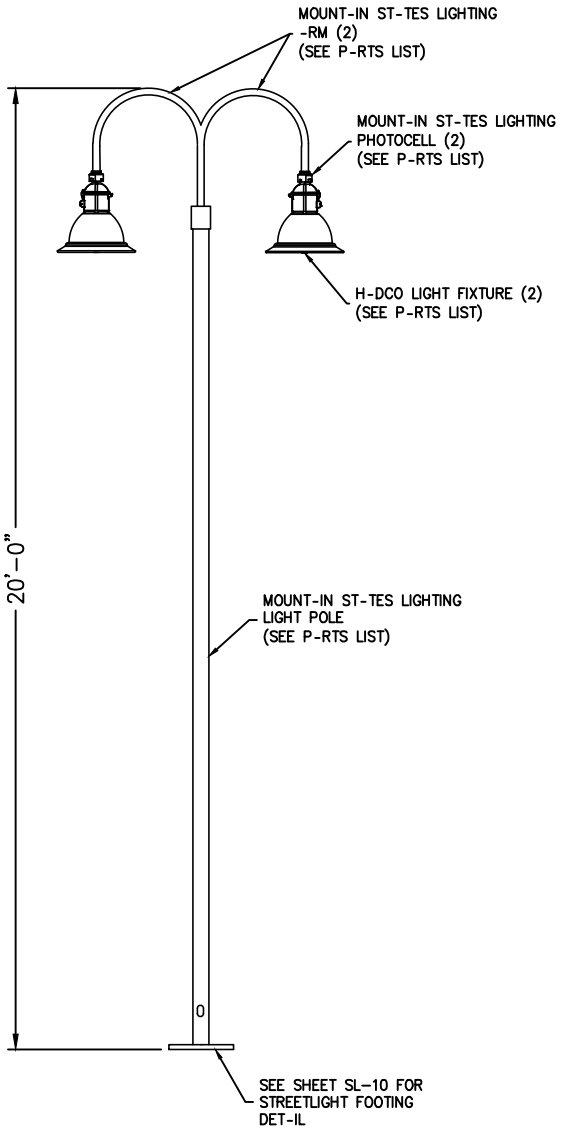

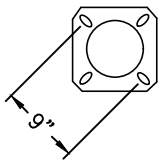

-NCHOR B-SE DET-IL 9" BOLT CIRCLE
(SEE P-RTS LIST FOR -NCHOR BOLTS)

P-RTS LIST	
DESCRIPTION	P-RT NUMBER
LIGHT FIXTURE	H-DCO #S8512M-3NN73032-10SNNN-
POLE	MSL #20TFS-7.8/4.4-(2)SB--BK
-RM	MSL #5'SS-/18"R-BK
-NCHOR BOLTS	MSL #3/4"X18"G-LV
PHOTOCELL	MSL #RD8645BK

1

NO.	REVISION DESCRIPTION	D-TE
1	2024 ST-ND-RDS UPD-TE	11/01/2022

THIS DOCUMENT -ND -NY ILLUSTR-TIONS HEREON -RE PROVIDED -S ST-ND-RD CONSTRUCTION DET-ILS WITHIN HERRIM-N CITY. DEVI-TION FROM THIS DOCUMENT REQUIRES -PPROV-L OF HERRIM-N CITY. HERRIM-N CITY C-NNOT BE HELD LI-BLE FOR MISUSE OR CH-NGES REG-RDING THIS DOCUMENT.

HERRIMAN CITY

HERRIMAN CITY
ENGINEERING DEPARTMENT
STREET LIGHTING
RETAIL DOUBLE SHEPARD HOOK

SL-05A

6/21/2024 8:51 AM Q:\ENGINEERING\STANDARDS\CITY STANDARDS\WORKING EDITION\CAD\SECTION 6 STANDARD DRAWINGS\SL\SL-05A SHEPARD HOOK.DWG

6/21/2024 8:56 AM Q:\ENGINEERING\STANDARDS\CITY STANDARDS\WORKING EDITION\CAD\SECTION 6 STANDARD DRAWINGS\SL\SL-06 RESI STREET LIGHT LAYOUT.DWG

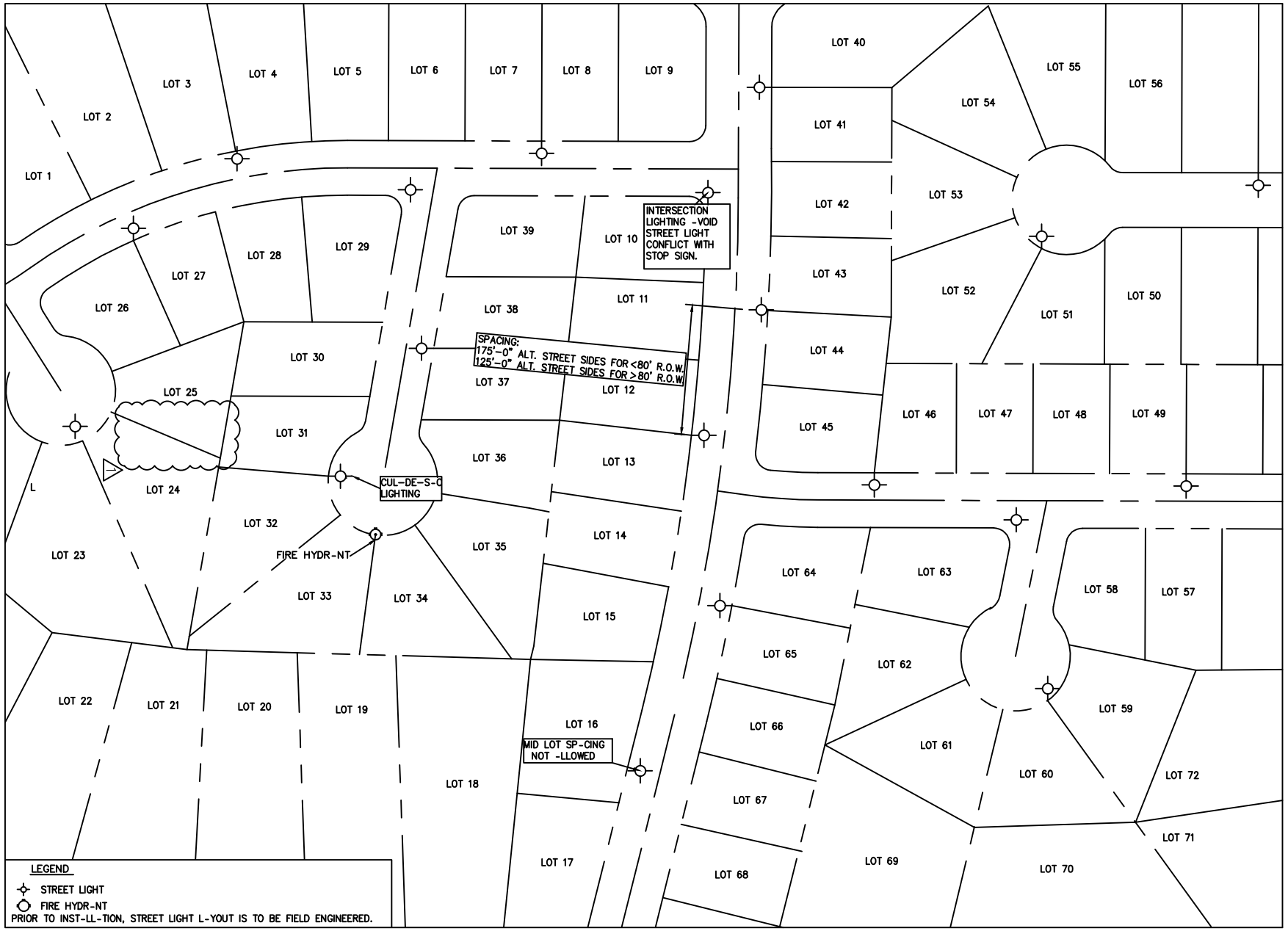

NO.	REVISION DESCRIPTION	D-TE
1	2024 ST-ND-RDS UPD-TE	6/21/2024

THIS DOCUMENT -ND -NY ILLUSTR-TIONS HEREON -RE PROVIDED -S ST-ND-RD CONSTRUCTION DET-ILS WITHIN HERRIM-N CITY. DEVI-TION FROM THIS DOCUMENT REQUIRES -PPROV-L OF HERRIM-N CITY. HERRIM-N CITY C-NNOT BE HELD LI-BLE FOR MISUSE OR CH-NGES REG-RDING THIS DOCUMENT.

HERRIMAN CITY

HERRIMAN CITY
ENGINEERING DEPARTMENT
STREET LIGHTING
TYPICAL STREET LIGHTING LAYOUT

SL-06

RESIDENTIAL

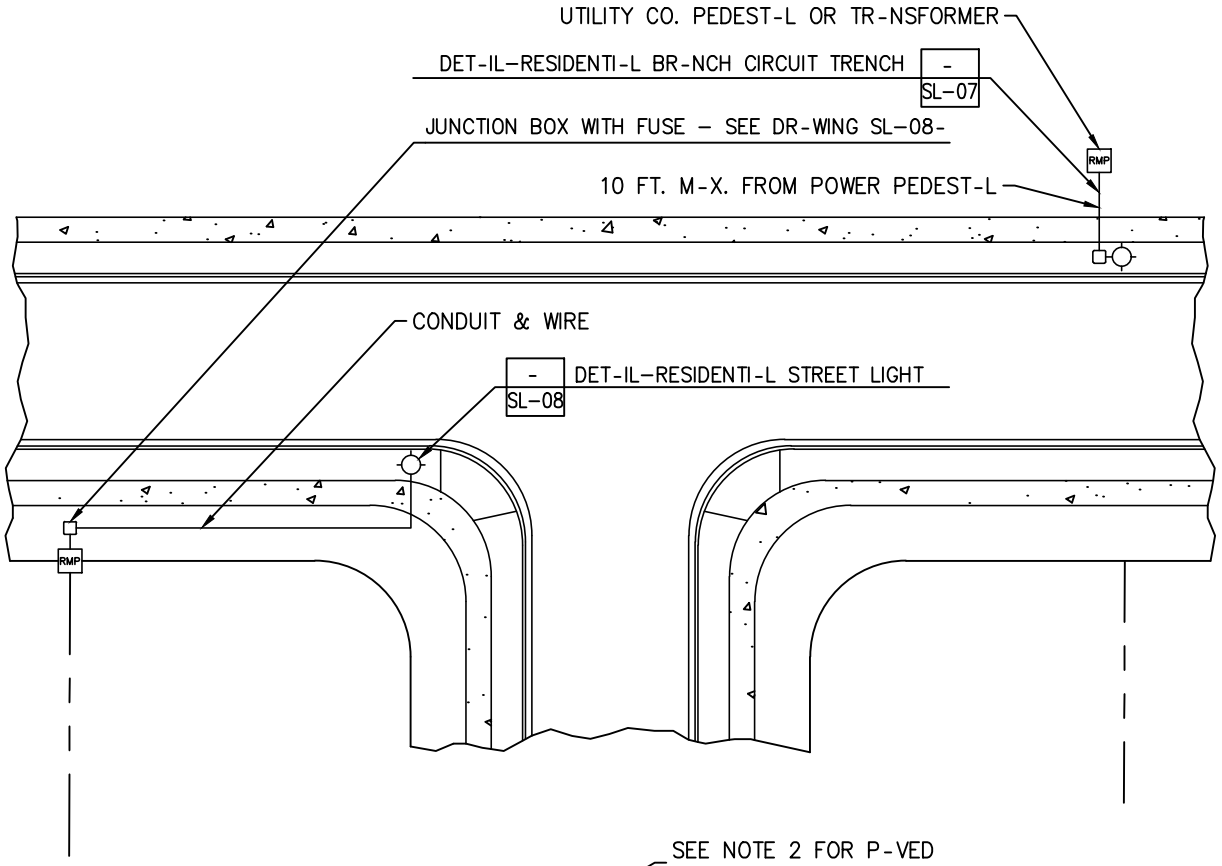

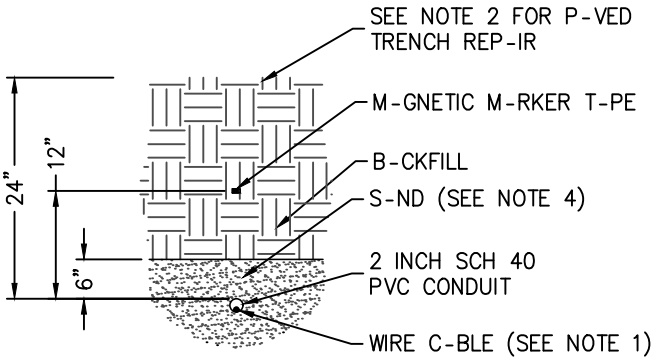

A DETAIL-RESIDENTIAL BRANCH CIRCUIT TRENCH
SC-LE: NO SC-LE

NOTES:

1. -LL RESIDENTI-L STREET LIGHT C-BLE SH-LL PL-CED IN CONDUIT -ND BE PER HC SPECIFIC-TIONS SECTION 26 56 19(2.1)(-).

2. TRENCH REP-IR IN - RO-D W-Y OR P-VED TR-IL IS TO BE REP-IRED -S PER HERRIM-N CITY EXC-V-TION PERMIT SPECIFIC-TION.

3. -LL L-NDSC-PE -ND IRRIG-TION IS TO BE REP-IRED TO ORIGIN-L CONDITION OR BETTER.

4. PIPE ZONE SH-LL BE S-ND PER -PW- SECTION 31 05 13

NO.	REVISION DESCRIPTION	D-TE

THIS DOCUMENT -ND -NY ILLUSTR-TIONS HEREON -RE PROVIDED -S ST-ND-RD CONSTRUCTION DET-ILS WITHIN HERRIM-N CITY. DEVI-TION FROM THIS DOCUMENT REQUIRES -PPROV-L OF HERRIM-N CITY. HERRIM-N CITY C-NNOT BE HELD LI-BLE FOR MISUSE OR CH-NGES REG-RDING THIS DOCUMENT.

HERRIMAN CITY

HERRIMAN CITY
ENGINEERING DEPARTMENT
STREET LIGHTING
RESIDENTIAL STREET LIGHT POWER LAYOUT

SL-07

7/20/2023 4:05 PM Q:\ENGINEERING\STANDARDS\CITY STANDARDS\WORKING EDITION\CAD\SECTION 6 STANDARD DRAWINGS\SL\SL-07 RESI STREET LIGHT POWER LAYOUT.DWG

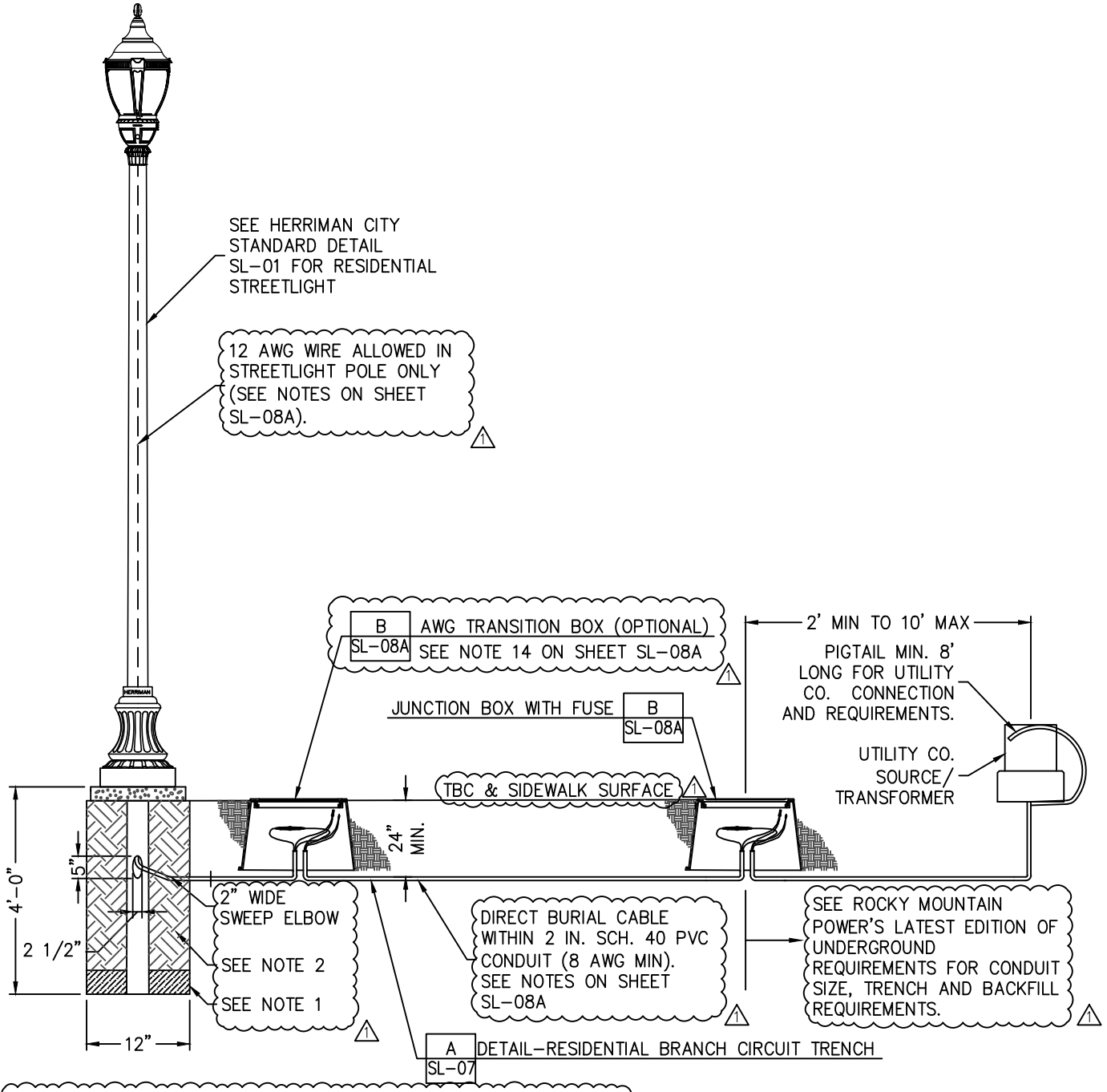

BACKFILL REQUIREMENTS:

1. PLACE (1) 60# BAG OF CONCRETE OR POUR 4 IN. THICK CLASS 4000 AT BOTTOM OF HOLE. CONCRETE PER APWA SPECIFICATION SECTION 03 30 04
2. PLACE GRANULAR BACKFILL BORROW PER APWA SPECIFICATION 31 05 13 COMPACTED TO 90% RC NO MORE THAN 6 INCH LIFTS
3. ALTERNATIVE BACKFILL OPTION – FILL ENTIRE HOLE WITH FLOWABLE FILL (CEMENT TREATED FILL) PER APWA SPECIFICATION SECTION 31 05 15
4. SEE ALL NOTES ON STANDARD DRAWING SL-08A.

1

NO.	REVISION DESCRIPTION	DATE
1	2024 STANDARDS UPDATE	11/01/2022

THIS DOCUMENT AND ANY ILLUSTRATIONS HEREON ARE PROVIDED AS STANDARD CONSTRUCTION DETAILS WITHIN HERRIMAN CITY. DEVIATION FROM THIS DOCUMENT REQUIRES APPROVAL OF HERRIMAN CITY. HERRIMAN CITY CANNOT BE HELD LIABLE FOR MISUSE OR CHANGES REGARDING THIS DOCUMENT.

HERRIMAN CITY

HERRIMAN CITY
ENGINEERING DEPARTMENT
STREET LIGHT
RESIDENTIAL STREET LIGHT UNDERGROUND

SL-08

6/21/2024 9:55 AM Q:\ENGINEERING\STANDARDS\CITY STANDARDS\WORKING EDITION\CAD\SECTION 6 STANDARD DRAWINGS\SL\SL-08 RESI STREET LIGHT UNDERGROUND.DWG

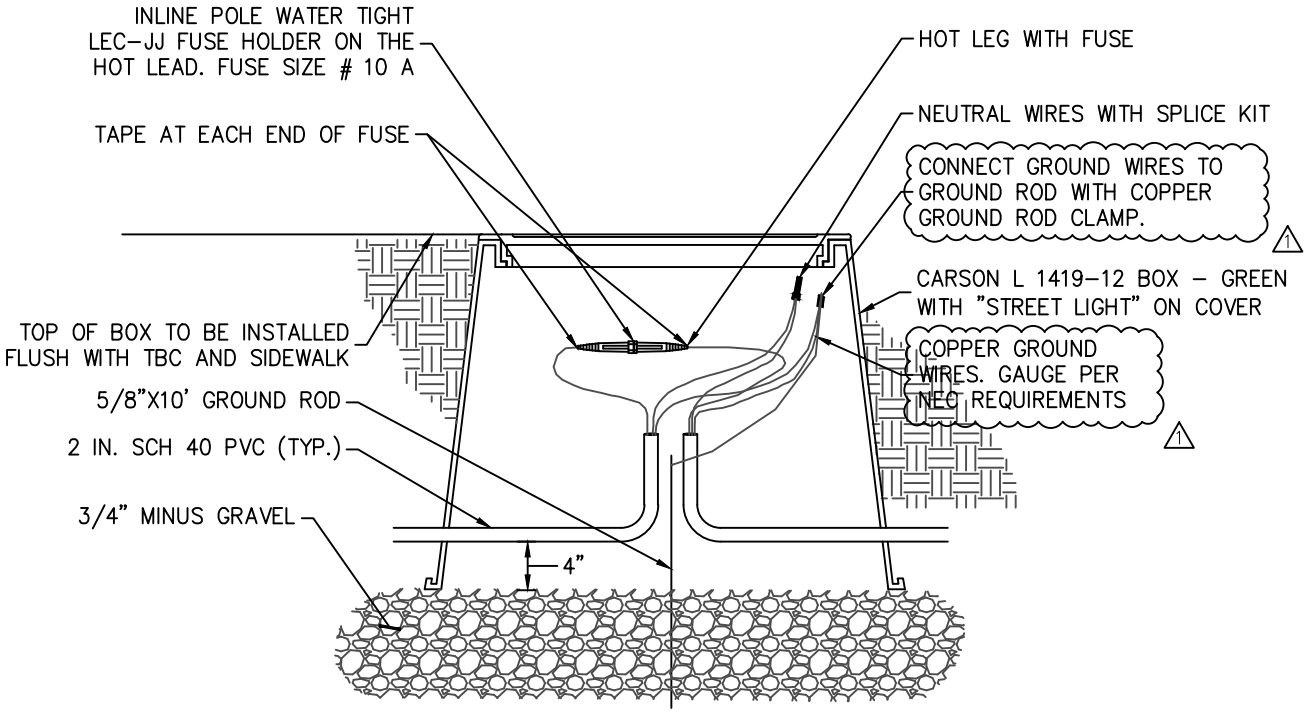

B DETAIL-JUNCTION/SPLICE BOX WITH FUSE (120 VOLT SYSTEM)
SCALE: NO SCALE

NOTES:

1. CONTRACTORS SHALL FOLLOW HERRIMAN CITY INSTALLATION AND INSPECTION PROCEDURES BEFORE ACCEPTANCE.
2. ALL CONSTRUCTION TO MEET HERRIMAN CITY SPECIFICATIONS AND NATIONAL ELECTRIC CODE.
3. UNDISTURBED NATIVE GRAVEL OR 90% COMPACTED ROAD BASE IN 6" LIFTS.
4. WIRES FROM TRANSFORMER AND ALL CONDUCTORS SHALL BE 8 GAUGE TYPE TC CABLE COPPER OR, THHN-THWN DIRECT BURY COPPER CONDUCTORS. 1
5. FUSE HOT WIRE IN JUNCTION BOX. SUPPLY AND INSTALL SPLICE KIT FOR NEUTRAL.
6. CONTRACTOR TO INSTALL JUNCTION BOX WITH FUSE. BOX TO BE LOCATED WITHIN 10 FEET FROM UTILITY CO. TRANSFORMER OR SECONDARY BOX. LEAVE PIGTAIL 8 FEET LONG TO TRANSFORMER OR SECONDARY BOX. UTILITY CO. TO MAKE CONNECTION.
7. CONTRACTORS SHALL PROVIDE ALL NECESSARY PARTS AND LABOR FOR COMPLETE AND OPERABLE INSTALLATION OF STREET LIGHTS.
8. EACH STREET LIGHT SHALL HAVE A JUNCTION BOX WITH LID MARKED "STREETLIGHTS"
9. TRAFFIC RATED BOX IF IN, OR WITHIN 5 FT OF A DRIVEWAY.
10. ALL TRENCHES TO BE INSPECTED BY CITY INSPECTOR AND SURVEYED BY GIS DEPARTMENT.
11. NOTIFY PW INSPECTOR 2 WEEKS BEFORE INSTALLATION OF STREET LIGHTS. PHONE # (801-446-5323)
12. NOTIFY PW INSPECTOR PRIOR TO FINALIZATION. 1
13. CONTRACTOR SHALL PROVIDE A 5 DAY BURN PRIOR TO OBTAINING SUBSTANTIAL COMPLETION
14. JUNCTION/SPLICE BOX REQUIRED FOR TRANSITION IF STEPPING DOWN TO 12 AWG WIRE IN POLE FROM 8 AWG WIRE IN CONDUIT STREETLIGHT SYSTEM. TRANSITION BOX REQUIRED WITHIN 24 IN. OF POLE.
15. NO MORE THAN FOUR STREETLIGHTS MAY BE CONNECTED TO SINGLE POWER SOURCE, UNLESS OTHERWISE DESIGNATED IN PROJECT DRAWINGS, STAMPED AND SIGNED BY ELECTRICAL ENGINEER. 1

NO.	REVISION DESCRIPTION	DATE
1	2024 STANDARDS UPDATE	6/21/2024

THIS DOCUMENT AND ANY ILLUSTRATIONS HEREON ARE PROVIDED AS STANDARD CONSTRUCTION DETAILS WITHIN HERRIMAN CITY. DEVIATION FROM THIS DOCUMENT REQUIRES APPROVAL OF HERRIMAN CITY. HERRIMAN CITY CANNOT BE HELD LIABLE FOR MISUSE OR CHANGES REGARDING THIS DOCUMENT.

HERRIMAN CITY

HERRIMAN CITY
ENGINEERING DEPARTMENT
STREET LIGHT
RESIDENTIAL STREET LIGHT UNDERGROUND

SL-08A

1/20/20 Q:\ENGINEERING\STANDARDS\CITY STANDARDS\WORKING EDITION\CAD\SECTION 6 STANDARD DRAWINGS\SL\SL-08A RESI STREET LIGHT UNDERGROUND.DWG

NO.	REVISION DESCRIPTION	D-TE
2	2024 ST-ND-RDS UPD-TE	11/01/2022

THIS DOCUMENT -ND -NY ILLUSTR-TIONS HEREON -RE PROVIDED -S ST-ND-RD CONSTRUCTION DET-ILS WITHIN HERRIM-N CITY. DEVI-TION FROM THIS DOCUMENT REQUIRES THAT HERRIM-N CITY -NNOT BE HELD -IABLE FOR MISUSE OR CH-NGES REG-RDING THIS DOCUMENT.

HERRIMAN CITY
ENGINEERING DEPARTMENT
STREET LIGHT
ARTERIAL SL CONDUIT & POWER LAYOUT

SL-09

ARTERIAL

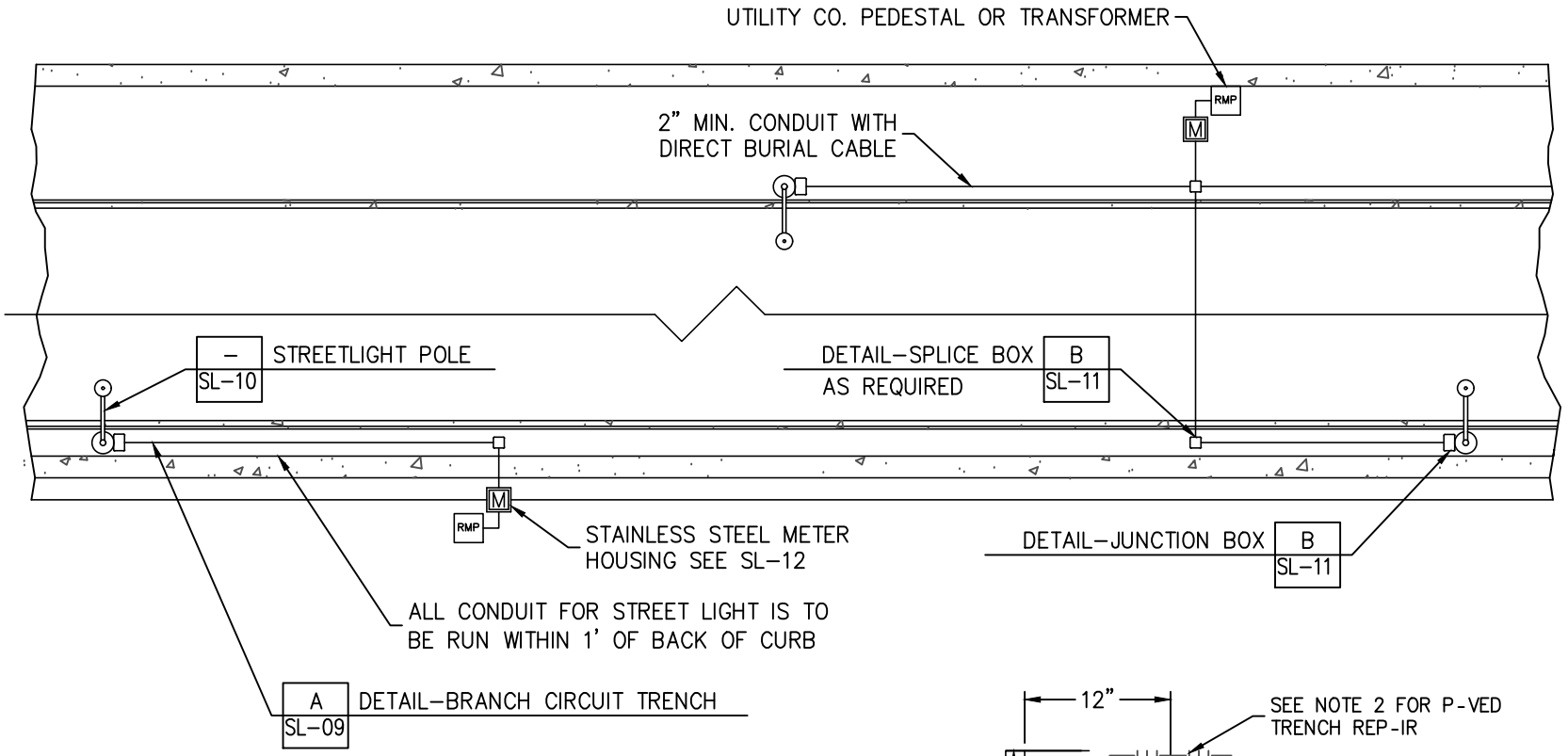

NOTES:

1. ALL COMMERCIAL STREET LIGHT CABLE SHALL BE MINIMUM 6 AWG DIRECT BURIAL CABLE IN CONDUIT 2" MINIMUM SCHEDULE 40 GRAY NON–CONDUCTIVE PVC. ⚠1
2. IF TRENCH REPAIR IS IN A ROADWAY OR PAVED TRAIL THE REPAIR WILL BE AS PER HERRIMAN CITY EXCAVATION PERMIT SPECIFICATION.
3. IN–GROUND BOXES LOCATED WITHIN 20' OF APPROACHES AND INTERSECTIONS SHALL BE CARSON H SERIES H1324.
4. PIPE ZONE SHALL BE SAND PER APWA SECTION 31 05 13 ⚠1

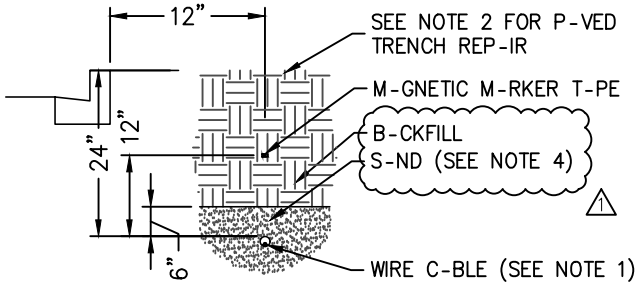

A DETAIL–COMMERCIAL BRANCH CIRCUIT TRENCH
SC-LE: NO SC-LE

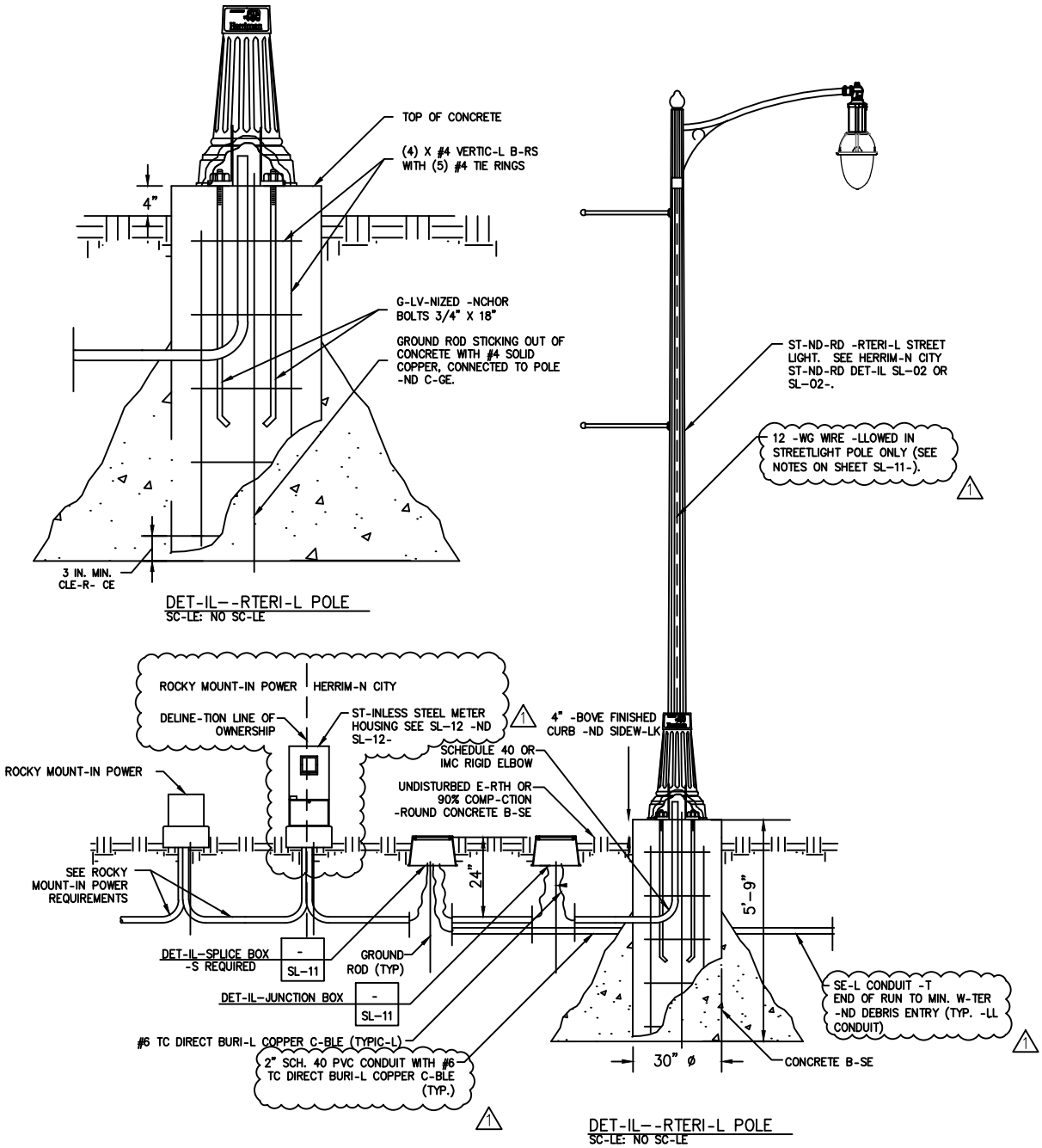

SEE NOTES ON SHEET SL-11- FOR -DDITION-L REQUIREMENTS.

NO.	REVISION DESCRIPTION	D-TE
1	2024 ST-ND-RDS UPD-TE	11/01/2022

THIS DOCUMENT -ND -NY ILLUSTR-TIONS HEREON -RE PROVIDED -S ST-ND-RD CONSTRUCTION DET-ILS WITHIN HERRIM-N CITY. DEVI-TION FROM THIS DOCUMENT REQUIRES -PPROV-L OF HERRIM-N CITY. HERRIM-N CITY C-NNOT BE HELD LI-BLE FOR MISUSE OR CH-NGES REG-RDING THIS DOCUMENT.

HERRIMAN CITY

HERRIMAN CITY
ENGINEERING DEPARTMENT
STREET LIGHT
ARTERIAL STREET LIGHT UNDERGROUND DET.

SL-10

6/21/2024 12:05 PM Q:\ENGINEERING\STANDARDS\CITY STANDARDS\WORKING EDITION\CAD\SECTION 6 STANDARD DRAWINGS\SL\SL-10 ARTERIAL SL UNDERGROUND.DWG

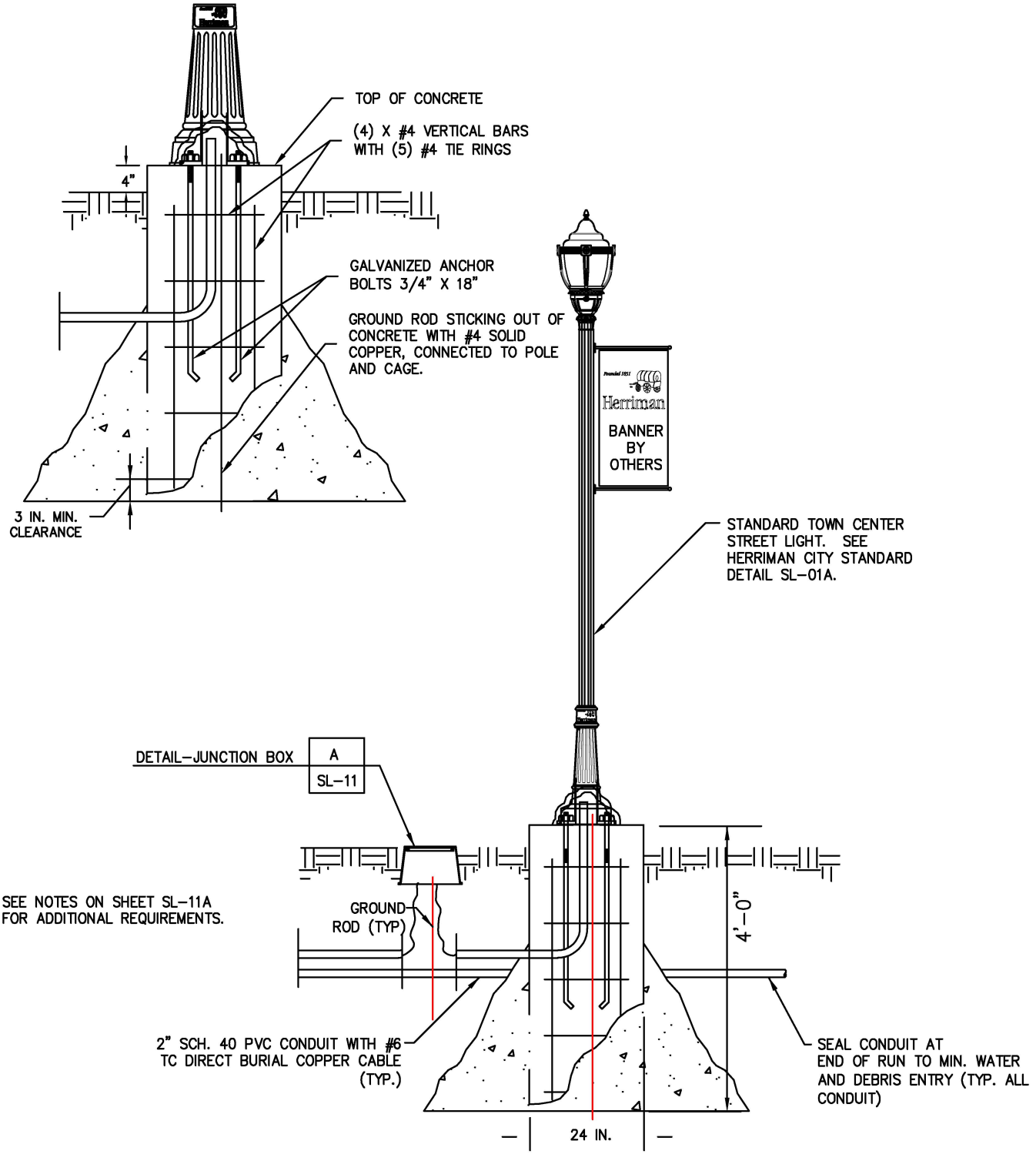

DETAIL-SIDEWALK POLE

SCALE: NO SCALE

NO.	REVISION DESCRIPTION	DATE
⚠	ADDED SHEET BACK INTO STANDARDS	11/01/2022

THIS DOCUMENT AND ANY ILLUSTRATIONS HEREON ARE PROVIDED AS STANDARD CONSTRUCTION DETAILS WITHIN HERRIMAN CITY. DEVIATION FROM THIS DOCUMENT REQUIRES APPROVAL OF HERRIMAN CITY. HERRIMAN CITY CANNOT BE HELD LIABLE FOR MISUSE OR CHANGES REGARDING THIS DOCUMENT.

HERRIMAN CITY

HERRIMAN CITY
ENGINEERING DEPARTMENT
STREET LIGHT
TOWN CENTER STREET LIGHT UNDERGROUND

SL-10A

6/21/2024 1:14 PM Q:\ENGINEERING\STANDARDS\CITY STANDARDS\WORKING EDITION\CAD\SECTION 6 STANDARD DRAWINGS\SL\SL-10A TOWN CENTER SL UNDERGROUND.DWG

SEE ADDITIONAL NOTES ON SL-11A

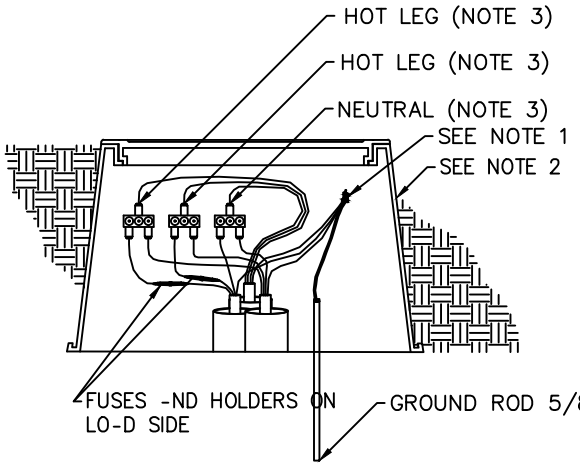

DET-IL NOTES

1. CONNECT GROUND WIRES TO GROUND ROD WITH COPPER GROUND ROD CL-MP
2. BOX TYPE: C-RSON H-1118-12 C-RSON H-1118-P1 WITH "STREET LIGHT" ON LID
3. CONNECT WITH UTILCO PED 350SS POL-RIS, OR -PPROVED EQU-L.

⚠1

A DETAIL-JUNCTION OR SPLICE BOX (240 V SYSTEM) ⚠1

SCALE: NO SCALE

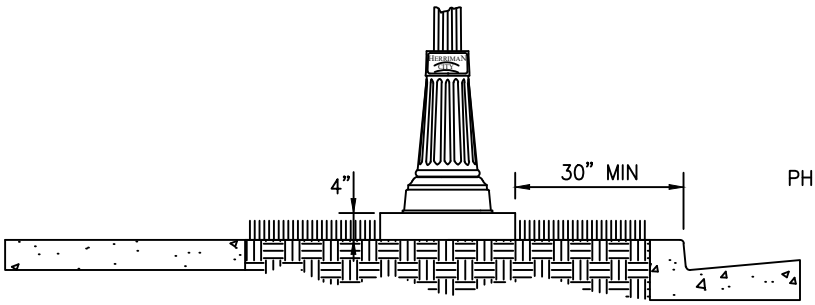

B DETAIL-POLE SPACING FROM FACE OF CURB

SC-LE: NO SC-LE

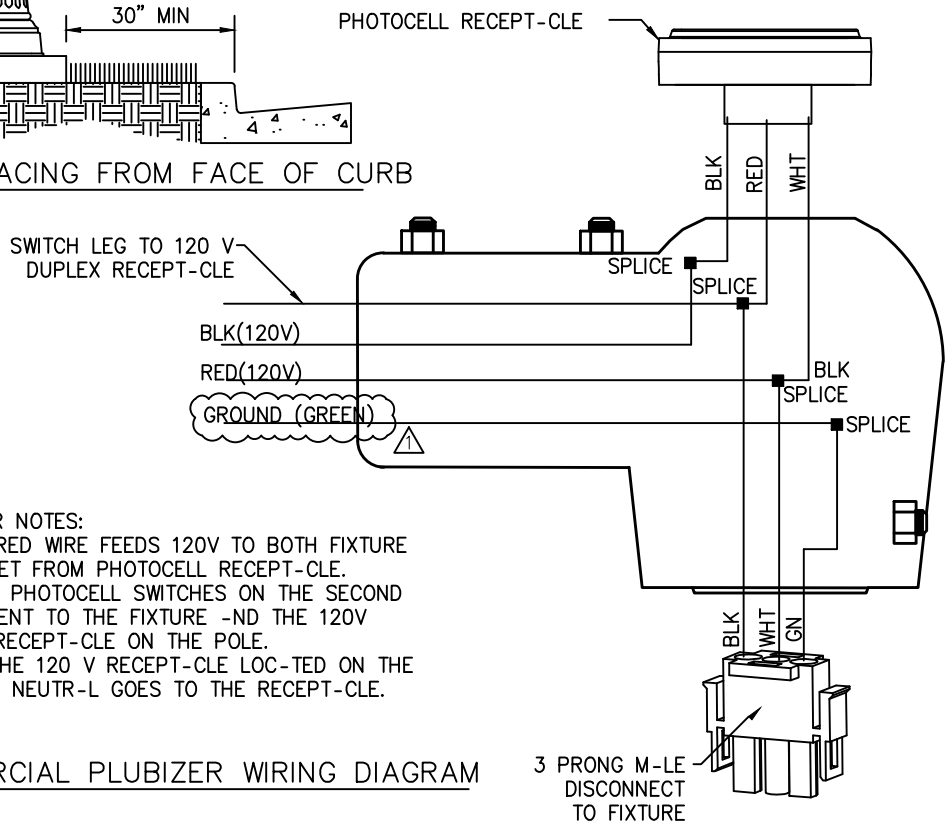

PLUMBIZER NOTES:
1 - THE RED WIRE FEEDS 120V TO BOTH FIXTURE -ND OUTLET FROM PHOTOCELL RECEPT-CLE. WHEN THE PHOTOCELL SWITCHES ON THE SECOND 120V IS SENT TO THE FIXTURE -ND THE 120V PLUG-IN RECEPT-CLE ON THE POLE.
2 - ON THE 120 V RECEPT-CLE LOC-TED ON THE POLE, THE NEUTR-L GOES TO THE RECEPT-CLE.

C DETAIL- COMMERCIAL PLUBIZER WIRING DIAGRAM

SCALE: NO SCALE

NO.	REVISION DESCRIPTION	D-TE
⚠	2024 ST-ND-RDS UPD-TE	11/01/2022

THIS DOCUMENT -ND -NY ILLUSTR-TIONS HEREON -RE PROVIDED -S ST-ND-RD CONSTRUCTION DET-ILS WITHIN HERRIM-N CITY. DEVI-TION FROM THIS DOCUMENT REQUIRES -PPROV-L OF HERRIM-N CITY. HERRIM-N CITY C-NNOT BE HELD LI-BLE FOR MISUSE OR CH-NGES REG-RDING THIS DOCUMENT.

HERRIMAN CITY

HERRIMAN CITY
ENGINEERING DEPARTMENT
STREET LIGHT
ARTERIAL STREET LIGHT WIRING DETAIL

SL-11

6/21/2024 8:06 AM Q:\ENGINEERING\STANDARDS\CITY STANDARDS\WORKING EDITION\CAD\SECTION 6 STANDARD DRAWINGS\SL\SL-11 ARTERIAL SL WIRING.DWG

NOTES:

1. CONTR-CTOR SH-LL FOLLOW HERRIM-N CITY INST-LL-TION -ND INSPECTION PROCEDURE FOR LIGHT POLES -ND LIGHT FIXTURES BEFORE -CCEPT-NCE.

2. -RTERI-L LIGHT POLES SH-LL BE LOC-TED -S INDIC-TED ON THE -PPROVED LIGHTING SITE PL-N, -ND INST-LLED -S DESCRIBED IN THE CITY ST-ND-RDS.

3. E-CH COMMERCI-L LIGHT SH-LL H-VE - JUNCTION BOX WITH COVER M-RKED "STREETLIGHTING"

4. SUPPLY SPLICE KIT FOR NEUTR-L WIRE.

5. INST-LL GR-Y 2 IN. NON–CONDUCTIVE PVC CONDUITS WITH 24" COVER -ND S-ND BEDDING.

6. CONTR-CTOR TO INST-LL METER C-BINET WITH BRE-KER P-NEL. BOX TO BE LOC-TED MIN. 8' FROM UTILITY CO. TR-NSFORMER OR SECOND-RY BOX (SEE DET-IL SL–12 & SL–12-).

7. B-L-NCE LO-DS -CROSS PH-SES FOR 120 V RECEPT-CLES.

8. VIBR-TED 4000 PSI CONCRETE @ 28 D-YS (6.5 CITY MIX).

9. -NY DISTURBED M-TERI-L WITHIN 8' OF POLE FOUND-TION SH-LL BE COMP-CTED TO 90% OR GRE-TER.

10. UNDISTURBED N-TIVE GR-VEL–S-NDY GR-VEL -SSUMED. IF DIFFERENT, CONT-CT CITY ENGINEER.

11. USE - 30" DI-. SONO TUBE.

~~12. ELECTRONIC -S-BUILTS MUST BE SENT -S -UTOC-D DWG OR ESRI SH-PEFILE~~ 1

13. GROUND -ND NEUTR-L SH-LL BE SEP-R-TE.

14. M-INT-IN 3" CLE-R-NCE ON -LL SIDES OF REB-R.

~~15. FIELD -S-BUILTS BY CONTR-CTOR~~ 1

16. LO-D SCHEDULE (COPY GIVEN TO BUILDING DEP-RTMENT).

17. FIVE D-Y BURN TEST -ND REMOV-L OF T-PE.

18. IF DEPTH C-NNOT BE MET, M-SS MUST BE EQUIV-LENT TO M-SS -S SHOWN.

19. REB-R -ND TRENCH MUST BE INSPECTED PRIOR TO CONCRETE POUR.

20. -LL SPECIFIC-TIONS FOR WIRE, CONDUIT, FUSE KITS, SPLICE KITS, JUNCTION BOXES -ND CONNECTORS MUST BE SUBMITTED TO THE CITY INSPECTOR FOR -PPROV-L PRIOR TO -NY WORK BEING PERFORMED.

21. -LL CONDUCTORS SH-LL BE 6 G-UGE TYPE TC COPPER, OR THHN–THWN DIRECT BURY COPPER CONDUCTORS.

22. NO MORE TH-N FOUR STREETLIGHTS M-Y BE CONNECTED TO - SINGLE POWER SOURCE, UNLESS OTHERWISE DESIGN-TED IN PROJECT DR-WINGS, ST-MPED -ND SIGNED BY -N ELECTRIC-L ENGINEER. 1

23. CONTR-CTOR TO PROVIDE POL-RIS CONNECTORS OUTLINED ON SHEET SL–11

NO.	REVISION DESCRIPTION	D-TE
1	2024 ST-ND-RDS UPD-TE	6/21/2024

THIS DOCUMENT -ND -NY ILLUSTR-TIONS HEREON -RE PROVIDED -S ST-ND-RD CONSTRUCTION DET-ILS WITHIN HERRIM-N CITY. DEVI-TION FROM THIS DOCUMENT REQUIRES -PPROV-L OF HERRIM-N CITY. HERRIM-N CITY C-NNOT BE HELD LI-BLE FOR MISUSE OR CH-NGES REG-RDING THIS DOCUMENT.

HERRIMAN CITY

HERRIMAN CITY
ENGINEERING DEPARTMENT
STREET LIGHT
ARTERIAL STREET LIGHT WIRING DETAIL

SL-11A

6/21/2024 12:24 PM Q:\ENGINEERING\STANDARDS\CITY STANDARDS\WORKING EDITION\CAD\SECTION 6 STANDARD DRAWINGS\SL\SL-11A ARTERIAL SL WIRING NOTES.DWG

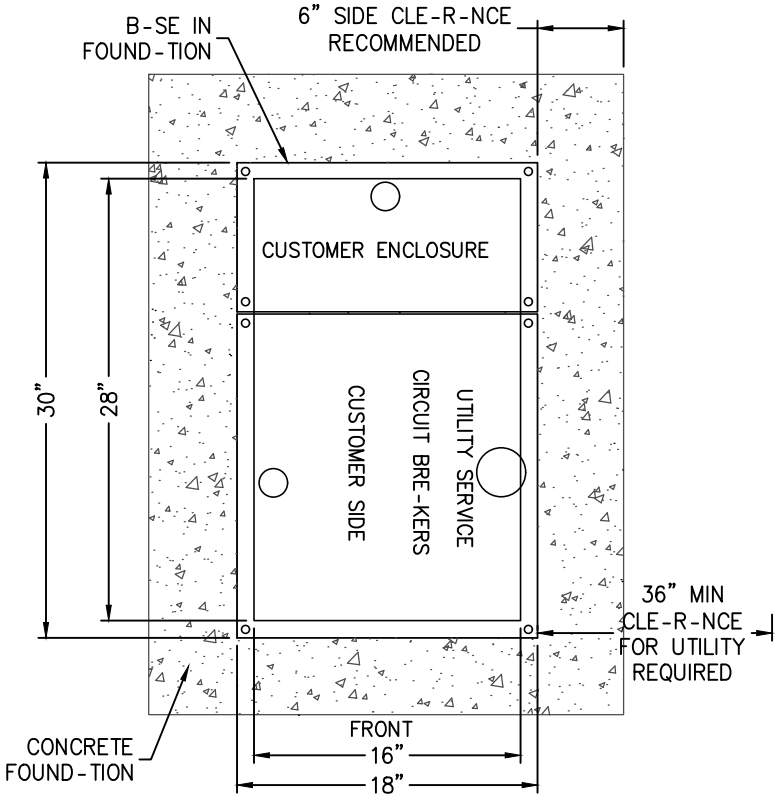

A DETAIL–METER HOUSING PAD
SC-LE: NO SC-LE

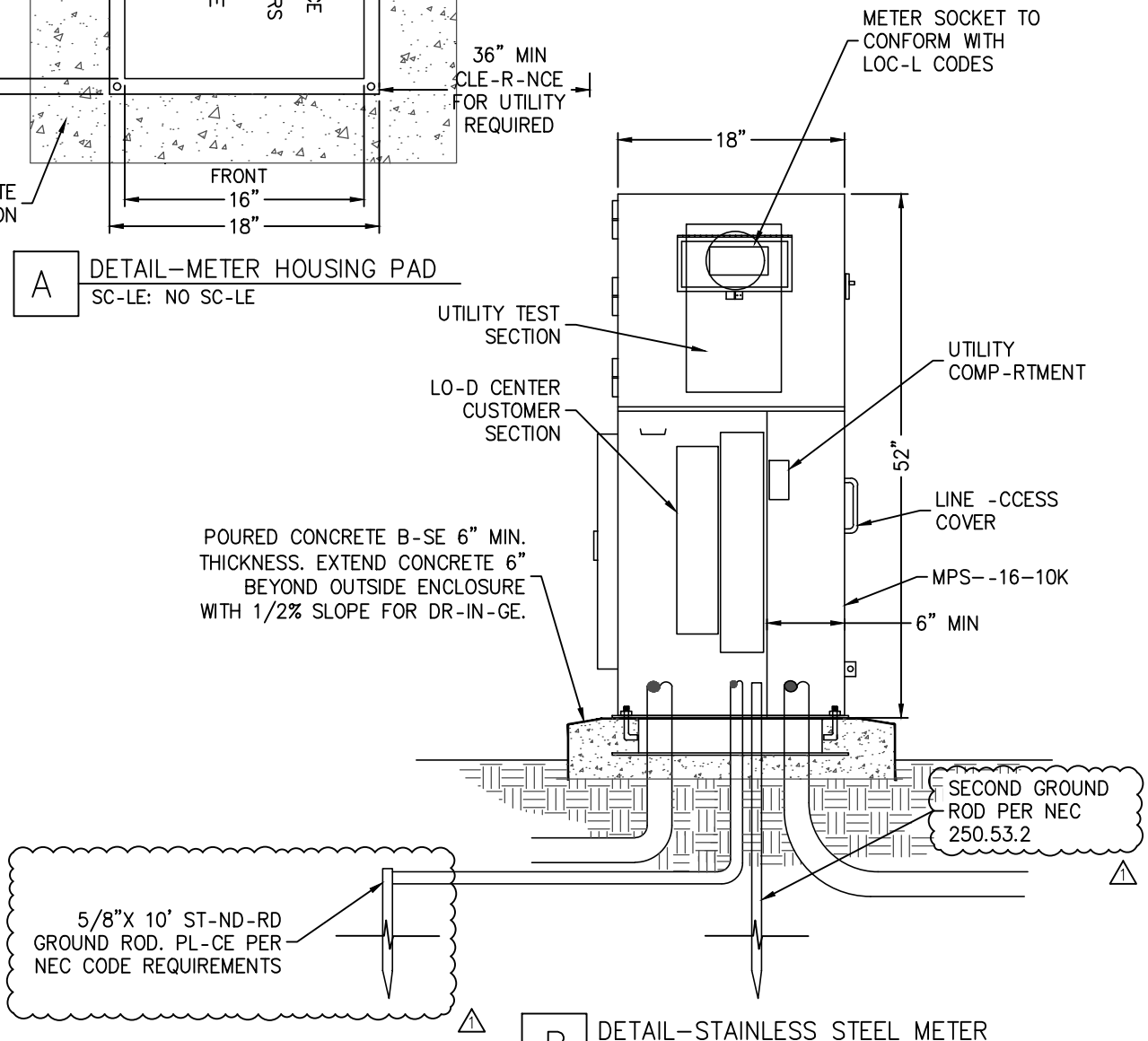

B DETAIL–STAINLESS STEEL METER HOUSING FRONT VIEW
SC-LE: NO SC-LE

NO.	REVISION DESCRIPTION	D-TE
1	2024 ST-ND-RDS UPD-TE	11/01/2022

THIS DOCUMENT AND ANY ILLUSTRATIONS HEREON ARE PROVIDED AS STANDARD CONSTRUCTION DETAILS WITHIN HERRIMAN CITY. DEVIATION FROM THIS DOCUMENT REQUIRES APPROVAL OF HERRIMAN CITY. HERRIMAN CITY CANNOT BE HELD LIABLE FOR MISUSE OR CHANGES REGARDING THIS DOCUMENT.

HERRIMAN CITY

HERRIMAN CITY
ENGINEERING DEPARTMENT
STREET LIGHT
STAINLESS STEEL METER HOUSING DETAIL

SL-12

6/21/2024 1:33 PM Q:\ENGINEERING\STANDARDS\CITY STANDARDS\WORKING EDITION\CAD\SECTION 6 STANDARD DRAWINGS\SL\SL-12 STAINLESS STEEL METER HOUSING.DWG

NO.	REVISION DESCRIPTION	D-TE

THIS DOCUMENT AND ANY ILLUSTRATIONS HEREON ARE PROVIDED AS STANDARD CONSTRUCTION DETAILS WITHIN HERRIMAN CITY. DEVIATION FROM THIS DOCUMENT REQUIRES APPROVAL OF HERRIMAN CITY. HERRIMAN CITY CANNOT BE HELD LIABLE FOR MISUSE OR CHANGES REGARDING THIS DOCUMENT.

HERRIMAN CITY

HERRIMAN CITY
ENGINEERING DEPARTMENT
STREET LIGHT
STAINLESS STEEL METER HOUSING DETAIL

SL-12A

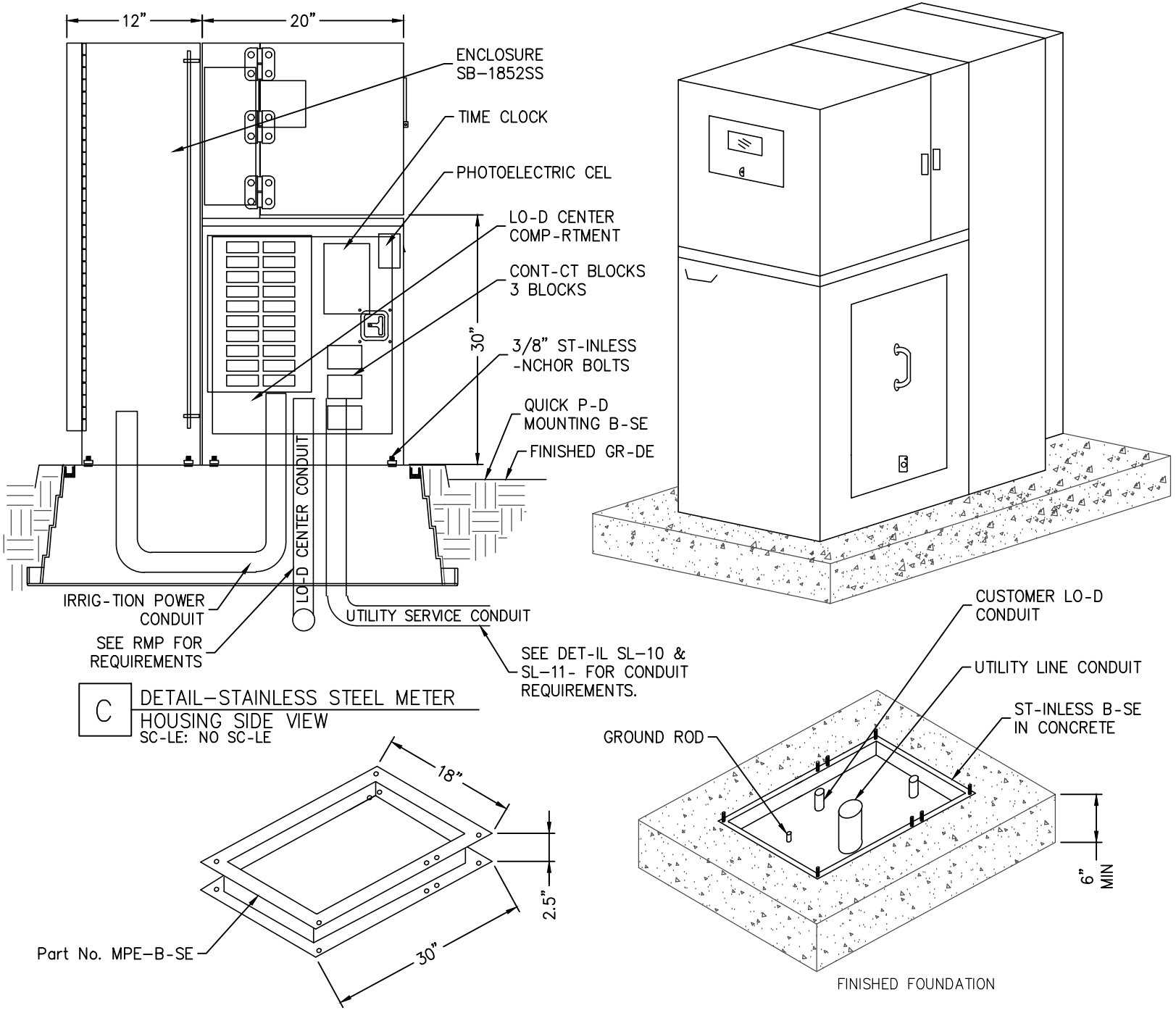

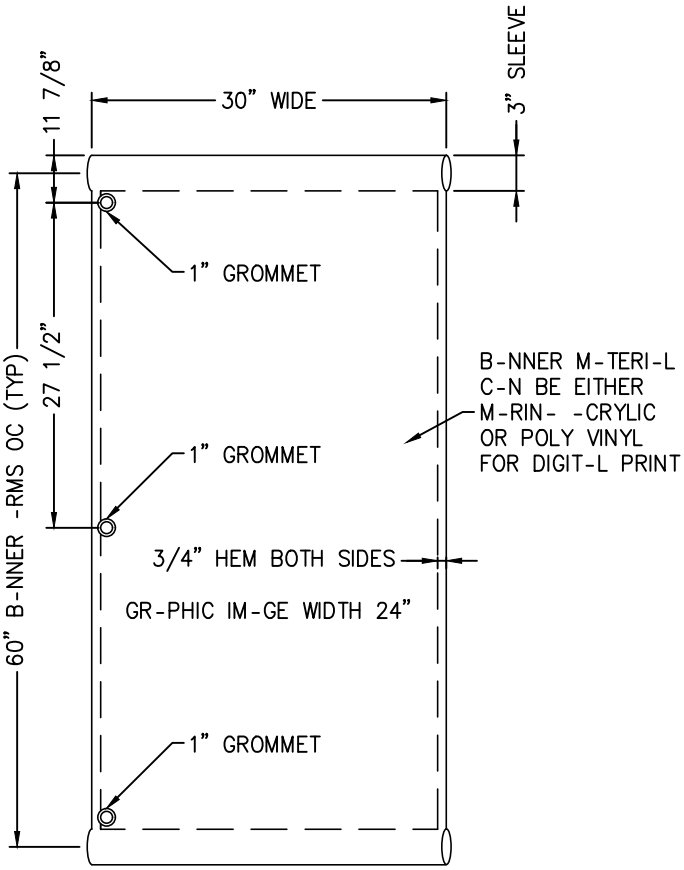

5 FOOT BANNER

SC-LE: NO SC-LE

FOR 20' TO 28' POLES

NO.	REVISION DESCRIPTION	D-TE
1	6 FT -ND 4 FT B-NNERS REMOVED	6/07/2024

THIS DOCUMENT AND ANY ILLUSTRATIONS HEREON ARE PROVIDED AS STANDARD CONSTRUCTION DETAILS WITHIN HERRIMAN CITY. DEVIATION FROM THIS DOCUMENT REQUIRES APPROVAL OF HERRIMAN CITY. HERRIMAN CITY CANNOT BE HELD LIABLE FOR MISUSE OR CHANGES REGARDING THIS DOCUMENT.

HERRIMAN CITY

HERRIMAN CITY

ENGINEERING DEPARTMENT

STREET LIGHT

BANNER PROGRAM SPECIFICATIONS

SL-13

6/7/2024 9:45 AM Q:\ENGINEERING\STANDARDS\CITY STANDARDS\WORKING EDITION\CAD\SECTION 6 STANDARD DRAWINGS\SL\SL-13 BANNER PROGRAM SPECIFICATIONS.DWG

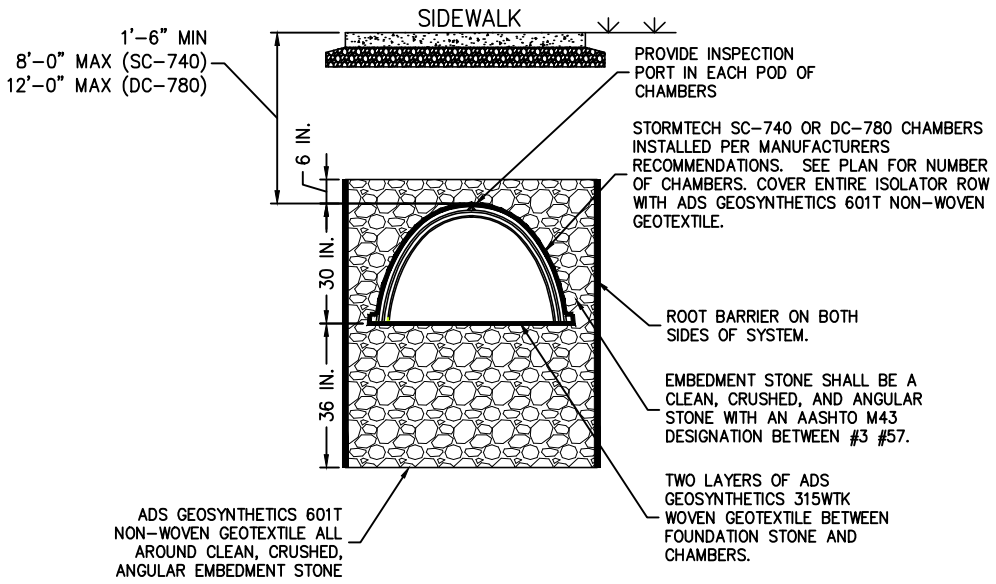

CHAMBER SYSTEM

(ADS OR APPROVED EQUAL)

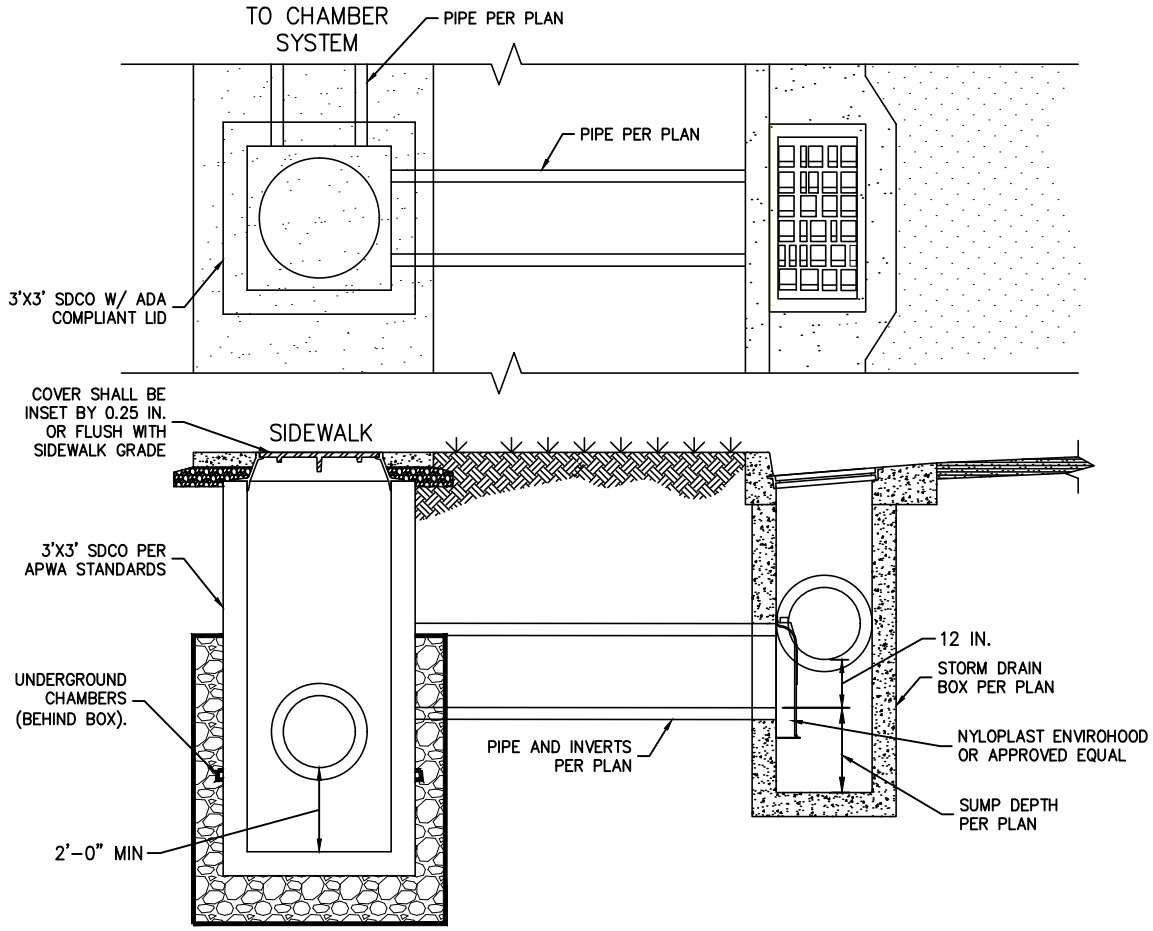

NO.	REVISION DESCRIPTION	DATE
	SHEET ADDED TO 2024 STANDARDS	6/26/2024

THIS DOCUMENT AND ANY ILLUSTRATIONS HEREON ARE PROVIDED AS STANDARD CONSTRUCTION DETAILS WITHIN HERRIMAN CITY. DEVIATION FROM THIS DOCUMENT REQUIRES APPROVAL OF HERRIMAN CITY. HERRIMAN CITY CANNOT BE HELD LIABLE FOR MISUSE OR CHANGES REGARDING THIS DOCUMENT.

HERRIMAN CITY

HERRIMAN CITY

ENGINEERING DEPARTMENT

STORM DRAIN

LID INFILTRATION CHAMBERS

SD-01

6/26/2024 9:58 AM Q:\ENGINEERING\STANDARDS\CITY STANDARDS\WORKING EDITION\CAD\SECTION 6 STANDARD DRAWINGS\04 - SD\SD-01.DWG

NO.	REVISION DESCRIPTION	DATE
	SHEET ADDED TO 2024 STANDARDS	6/26/2024

THIS DOCUMENT AND ANY ILLUSTRATIONS HEREON ARE PROVIDED AS STANDARD CONSTRUCTION DETAILS WITHIN HERRIMAN CITY. DEVIATION FROM THIS DOCUMENT REQUIRES HERRIMAN CITY APPROVAL. HERRIMAN CITY CANNOT BE HELD LIABLE FOR MISUSE OR CHANGES REGARDING THIS DOCUMENT.

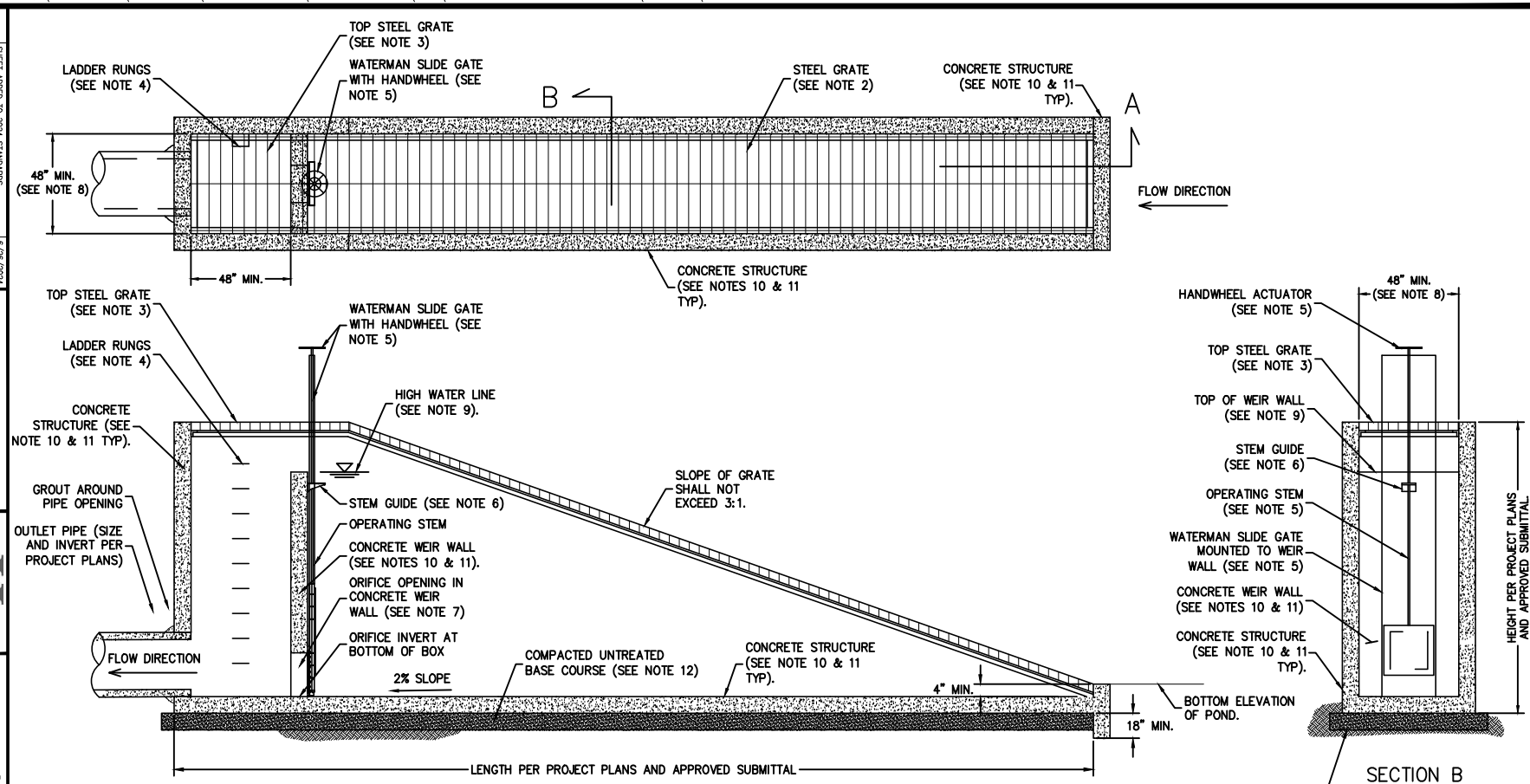

NOTES:

1. THIS DRAWING IS A DEPICTION OF THE STRUCTURE REQUIREMENTS. ENGINEER OF RECORD FOR THE PROJECT SHALL PROVIDE A DETAIL OR SHOP DRAWING THAT IS STAMPED AND SIGNED BY A LICENSED PROFESSIONAL ENGINEER IN THE STATE OF UTAH.
2. STEEL GRATE REQUIREMENTS: GALVANIZED STEEL, 2"X1/4" BARS @ 3" O.C., 2-3/4" CLEAR OPENING, OR SIMILAR CONFIGURATION. GRATE SECTIONS SHALL BE A MAXIMUM OF 4'X4' SECTIONS. GRATE SHALL REST ON A STEEL FRAME AND BE REMOVABLE BY MAINTENANCE EQUIPMENT.
3. TOP STEEL GRATE SHALL BE REMOVABLE FOR ACCESS AND FABRICATED TO ALLOW FOR SLIDE GRATE FRAME TO COME UP THROUGH GRATE.
4. LADDER RUNGS: LADDER RUNGS SPACED UNIFORMLY AT 12"; PLASTIC COATED STEEL; 8" WIDE.
5. WATERMAN GATE AND HANDWHEEL: PROVIDE MODEL A-251-Y-18X18-15 OR APPROVED EQUAL. SHALL INCLUDE SLIDE GATE, HANDWHEEL ACTUATOR, STEM GUIDE, AND OPERATING STEM. WATERMAN SLIDE GATE SHALL BE MOUNTED TO CONCRETE WEIR WALL.
6. STEM GUIDE: REQUIRED AT EVERY 10' OR A MINIMUM OF ONE (1) AS SHOWN.
7. ORIFICE: SIZE SHALL BE DETERMINED BY THE ENGINEER OF RECORD. ORIFICE SHALL BE INSTALLED INTO THE CONCRETE WEIR WALL. IF SIZE EXCEEDS 18" IN DIAMETER OR WIDTH, THEN A NEW SLIDE GATE SIZE SHALL BE CALLED OUT AND APPROVED BY HERRIMAN CITY.
8. MINIMUM INSIDE WIDTH OF STRUCTURE SHALL BE 48". ENGINEER OF RECORD AND CONTRACTOR RESPONSIBLE TO VERIFY IF WIDER STRUCTURE IS NEEDED TO ACCOMMODATE THE OUTLET PIPE.
9. HIGH WATER LINE: THIS SHALL BE THE CALCULATED PEAK WATER ELEVATION FOR THE GOVERNING 100-YEAR STORM EVENT. THE POND SHALL HAVE A MINIMUM OF 1 FT FREEBOARD ABOVE THIS ELEVATION.
10. CONCRETE STRUCTURE: CONCRETE SHALL BE MIN. CLASS 4,000 PER APWA 03 30 04. CONCRETE WALL THICKNESS SHALL BE PER THE PROJECT PLANS OR CONTRACTOR SUBMITTAL (BOTH TO BE STAMPED AND SIGNED BY PROFESSIONAL ENGINEER IN THE STATE OF UTAH).
11. STEEL REINFORCEMENT BAR SHALL BE PER THE PROJECT PLANS OR STRUCTURE SUBMITTAL (STAMPED AND SIGNED BY PROFESSIONAL ENGINEER IN THE STATE OF UTAH).
12. UNTREATED BASE COURSE (UBC): UBC SHALL BE PER APWA SECTION 32 11 23. THICKNESS SHALL BE PER PROJECT DRAWINGS, STAMPED AND SIGNED BY ENGINEER OF RECORD. MINIMUM THICKNESS SHALL BE 12".

HERRIMAN CITY
ENGINEERING DEPARTMENT
STORM DRAIN
POND OUTLET STRUCTURE

SD-02

***REFER TO PARTS LIST ON CW-PL FOR APPROVED PARTS MODELS.**

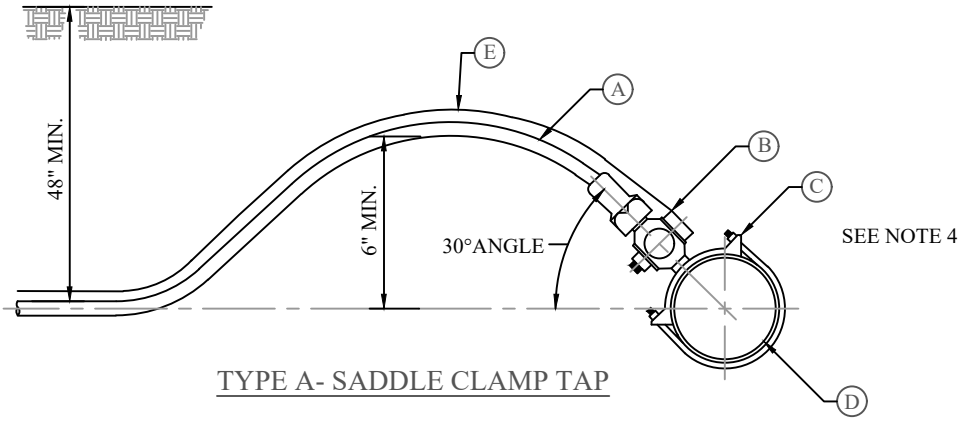

TYPE A- SADDLE CLAMP TAP

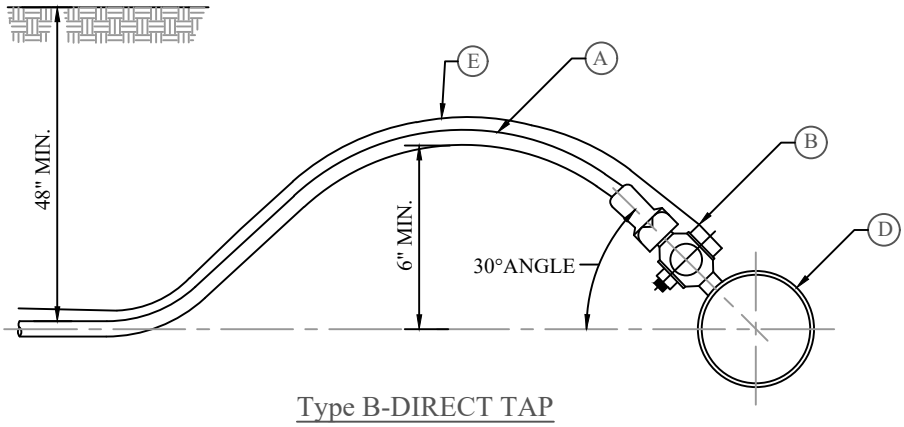

Type B-DIRECT TAP

NOTES FOR 1" MINIMUM SERVICE TAPS:

1. INSPECTION: PRIOR TO BACKFILLING, SECURE INSPECTION OF INSTALLATION BY CITY.
2. BACKFILL: INSTALL ALL BACKFILL MATERIAL PER APWA SECTION 31 05 13 IN LIFTS NOT EXCEEDING 8" AFTER COMPACTION. COMPACT EACH LIFT TO A MINIMUM RELATIVE DENSITY OF 95%. .
3. TAPPING: PLACE TAPS A MINIMUM 24" APART. USE A TAPPING TOOL WHICH IS SIZED CORRESPONDING TO THE SIZE OF THE SERVICE LINE TO BE INSTALLED. NO TAPS WITHIN 24" OF THE END OF PIPE OR ANY FITTING.
4. PVC PIPE: A SERVICE SADDLE CLAMP IS REQUIRED ON ALL PVC PIPE.
5. TAPE: TEFLON TAPE IS REQUIRED ON ALL TAPS.

LEGEND			
NO.	ITEM	DESCRIPTION	
Ⓐ	1" POLY PIPE	IPS POLY PIPE	
Ⓑ	1" CORPORATION STOP	TYPE A SEE PARTS LIST*	TYPE B SEE PARTS LIST*
Ⓒ	SERVICE SADDLE CLAMP	SEE PARTS LIST*	
Ⓓ	WATER MAIN PIPE	(D.I., P.V.C.) *	
Ⓔ	TRACER WIRE	10G TYPE K (SOFT)	

1

* DI PIPE MAY BE DIRECT TAPPED, IF DIRECT TAP USE CC THREADS

NO.	REVISION DESCRIPTION	D-TE
1	2024 ST-ND-RDS UPD-TE REVISION	6/25/2024

THIS DOCUMENT -ND -NY ILLUSTR-TIONS HEREON -RE PROVIDED -S ST-ND-RD CONSTRUCTION DET-ILS WITHIN HERRIM-N CITY. DEVI-TION FROM THIS DOCUMENT REQUIRES -PPROV-L OF HERRIM-N CITY. HERRIM-N CITY C-NNOT BE HELD LI-BLE FOR MISUSE OR CH-NGES REG-RDING THIS DOCUMENT.

HERRIMAN CITY

HERRIMAN CITY
ENGINEERING DEPARTMENT
CULINARY WATER
¾" AND 1" WATER METER W/ 1" WATER SERVICE

CW-01

6/25/2024 3:42 PM Q:\ENGINEERING\STANDARDS\CITY STANDARDS\WORKING EDITION\CAD\SECTION 6 STANDARD DRAWINGS\05 - CW\CW-01.DWG

LEGEND		
NO.	ITEM	DESCRIPTION
Ⓐ	FRAME AND COVER	SEE PARTS LIST FOR SIZE INFORMATION THE WORDS "WATER METER" CAST INTO COVER RECESSED ANTENNA HOLE REQUIRED IN COVER
Ⓑ	WATER METER	SEE PARTS LIST*
Ⓒ	3/4" WATER METER YOKE	SEE PARTS LIST*
	1" WATER METER YOKE	SEE PARTS LIST*
Ⓓ	METER BARREL	3/4" METER - 21" DIAM. - 36" HEIGHT WHITE HDPE BARREL (SEE NOTE 4 BELOW) ⚠1 1" METER - 24" DIAM. - 36" HEIGHT WHITE HDPE BARREL 1.5" & 2" METER - 30" DIAM. - 36" HEIGHT HDPE BARREL (LANDSCAPE INSTALLATIONS ONLY)
Ⓔ	1" CONNECTION	SEE PARTS LIST*
Ⓕ	1" POLY PIPE	IPS POLY PIPE
Ⓖ	WATER METER PIT ADJUSTING RING	SEE PARTS LIST*

TYPICAL 3/4" METER

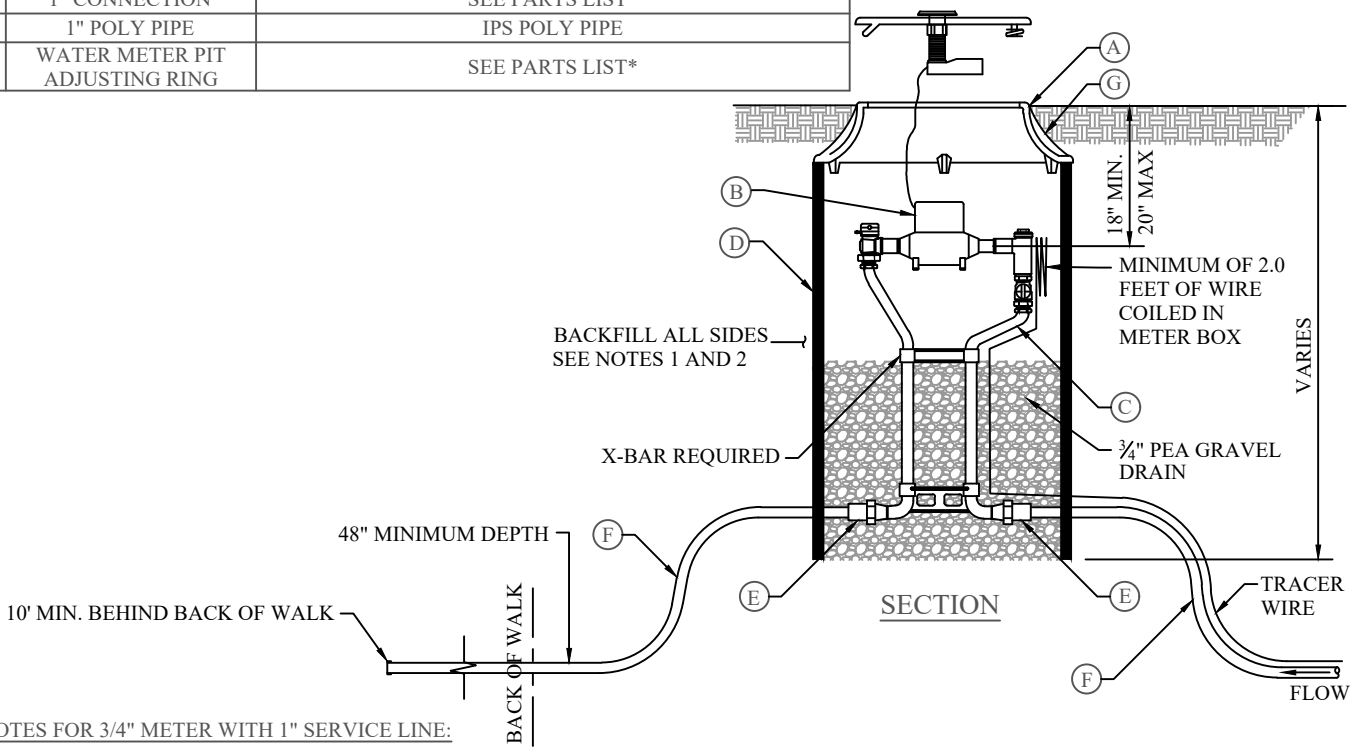

NOTES FOR 3/4" METER WITH 1" SERVICE LINE:

1. INSPECTION: PRIOR TO BACKFILLING AROUND THE METER BOX, SECURE INSPECTION OF INSTALLATION BY ENGINEER.
2. BACKFILLING: INSTALL ALL BACKFILL MATERIAL PER APWA SECTION 31 05 13 IN LIFTS NOT EXCEEDING 6" AFTER COMPACTION. COMPACT EACH LIFT TO A MINIMUM RELATIVE DENSITY OF 95%.
3. METER BOX: NO GRADE RINGS ALLOWED TO RAISE METER BOX.
4. METER IN TRAFFIC AREAS: METER BARREL SHALL BE 30" DIAM. RING & LID SHALL BE 24" AND AS SPECIFIED IN PARTS LIST.
   A) ALL METERS IN TRAFFIC AREAS SHALL BE INSTALLED WITH A CONCRETE COLLAR PER CW-08 ⚠1
5. METER: HERRIMAN CITY WILL PROVIDE AND INSTALL METER.
6. PIPE: INSTALL 1" IPS POLY PIPE TO 10' MIN. FROM BACK OF WALK.
7. PLACEMENT:
   A) METERS WITHIN 3 FT OF A DRIVE APPROACH OR ANY VEHICLE PATH SHALL COMPLY WITH NOTE 4 & 4A (ABOVE) ⚠1
   B) IN NEW CONSTRUCTION, INSTALL METER BOX NEAR CENTER OF LOT IN PARKSTRIP. IF DRIVEWAY LOCATIONS ARE KNOWN, PLACE THE WATER SERVICE ON THE WIDE SIDE OF THE LOT.
   C) 5' MIN. AWAY FROM MAILBOXES, TREES, UTILITY BOX OR ANY OTHER OBSTRUCTION. ⚠1
8. INSERTS REQUIRED WITH ALL COMPRESSION FITTINGS.
9. METER SETTER MUST BE PLACED AT 90° ANGLE TO STREET.

NO.	REVISION DESCRIPTION	DATE
⚠	2024 STANDARDS UPDATE REVISION	5/24/2024

THIS DOCUMENT AND ANY ILLUSTRATIONS HEREON ARE PROVIDED AS STANDARD CONSTRUCTION DETAILS WITHIN HERRIMAN CITY. DEVIATION FROM THIS DOCUMENT REQUIRES APPROVAL OF HERRIMAN CITY. HERRIMAN CITY CANNOT BE HELD LIABLE FOR MISUSE OR CHANGES REGARDING THIS DOCUMENT.

HERRIMAN CITY

HERRIMAN CITY
ENGINEERING DEPARTMENT
CULINARY WATER
¾" & 1" WATER METER W/ 1" WATER SERVICE

CW-01A

Q:\ENGINEERING\STANDARDS\CITY STANDARDS\CURRENT EDITION\CAD\05 - CW\CW-01A.DWG
4/11/2025 4:25 PM

***REFER TO PARTS LIST ON CW-PL FOR APPROVED PARTS MODELS.**

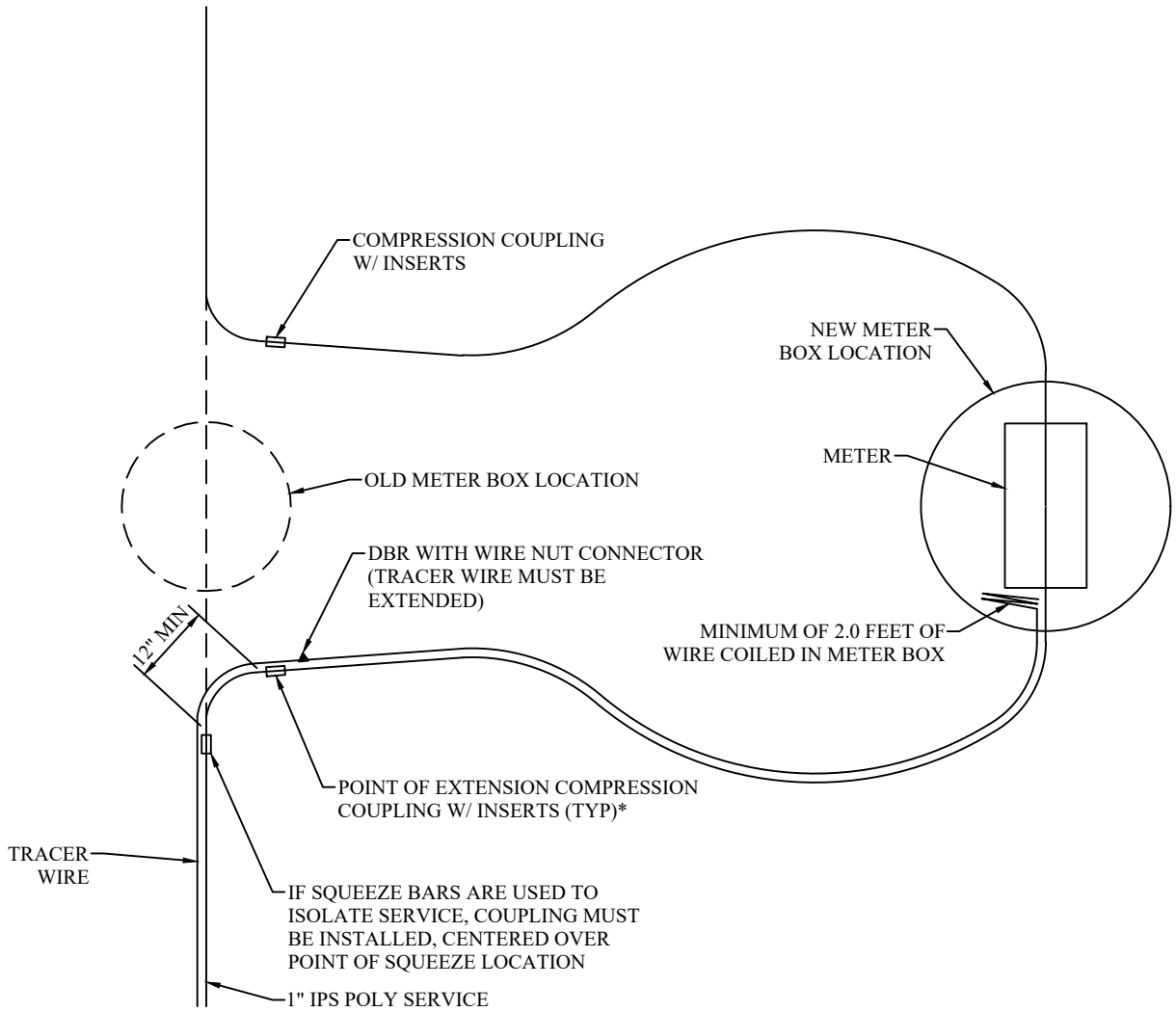

NOTES:

1. POINT OF CONNECTION MUST BE FRESHLY CUT.
2. CRIMP LOCATION MUST BE MINIMUM OF 12" FROM POINT OF EXTENSION.
3. INSPECTION MUST BE SCHEDULED WITH ENGINEERING DEPARTMENT MINIMUM 48 HOURS IN ADVANCE. (INSPECTION MUST BE MADE BEFORE BACKFILL OF EXCAVATION)
4. ALL CONNECTIONS AND NEW FITTINGS MUST BE SHOT BY G.I.S. DEPARTMENT.

NO.	REVISION DESCRIPTION	D-TE

THIS DOCUMENT -ND -NY ILLUSTR-TIONS HEREON -RE PROVIDED -S ST-ND-RD CONSTRUCTION DET-ILS WITHIN HERRIM-N CITY. DEVI-TION FROM THIS DOCUMENT REQUIRES -PPROV-L OF HERRIM-N CITY. HERRIM-N CITY C-NNOT BE HELD LI-BLE FOR MISUSE OR CH-NGES REG-RDING THIS DOCUMENT.

HERRIMAN CITY

HERRIMAN CITY
ENGINEERING DEPARTMENT
CULINARY WATER
WATER SERVICE RELOCATION

CW-01B

1/9/2021 6:21 PM Q:\ENGINEERING\PROJECTS\06 MUNICIPAL\2016-17\1617-03 DEV STDS AND REQ UPDATE\5-UPDATED DELIVERABLE\STANDARD DRAWINGS\CAD\CW\CW-01.DWG

***REFER TO PARTS LIST ON CW-PL FOR APPROVED PARTS MODELS.**

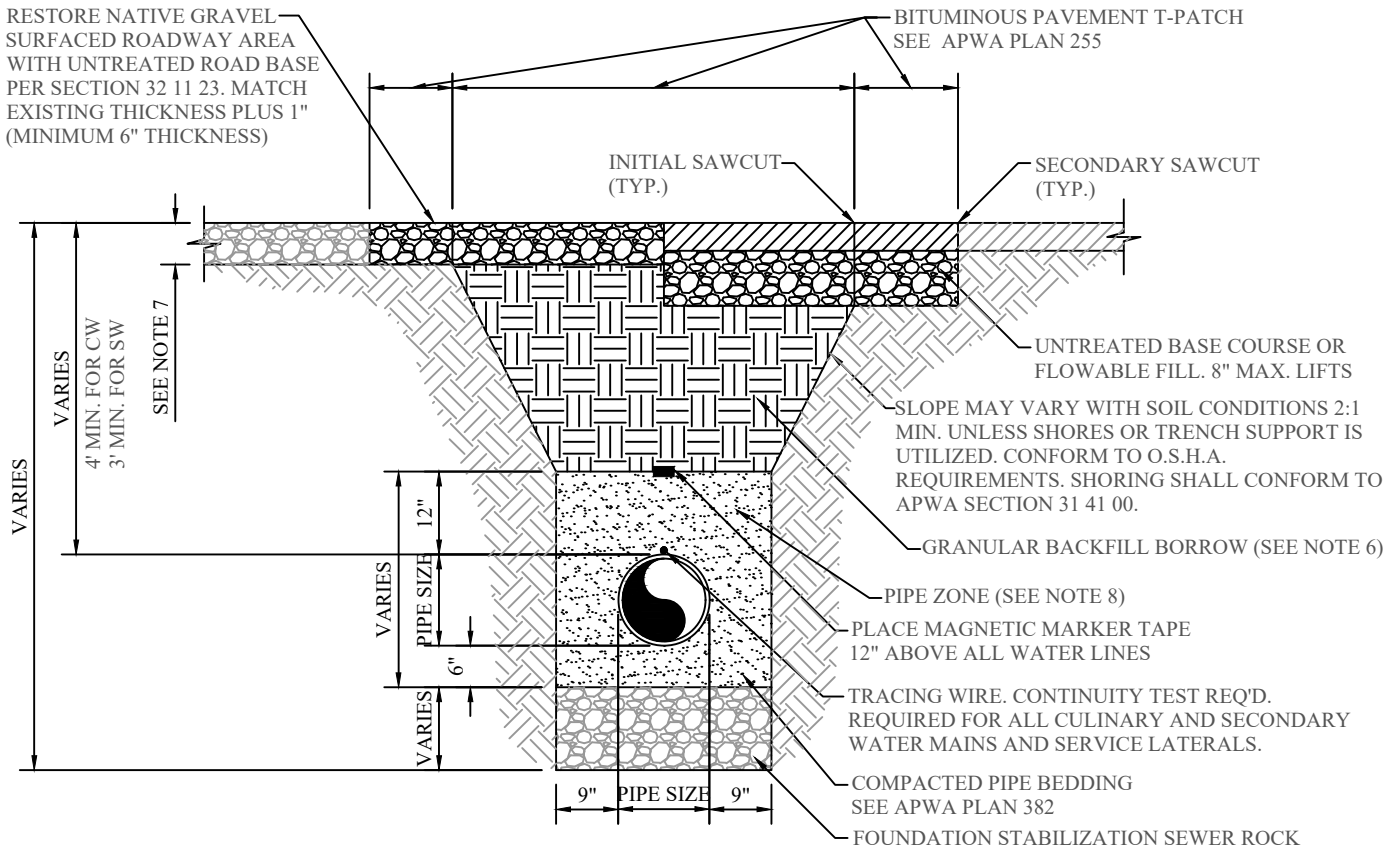

TYPICAL TRENCH

NOTES:

1. ADDITIONAL PAVEMENT REMOVAL: REMOVE ADDITIONAL PAVEMENT TO A PAINTED LANE STRIPE, A LIP OF GUTTER, A CURB, AN EXISTING PAVEMENT PATCH, OR AN EDGE OF PAVEMENT IF SUCH AFEATURE IS WITHIN 2' OF THE SECOND SAW-CUT. IF MORE THAN 50% OF THE PERMANENT SURFACING OF A TRAVELED LANE IS IMPACTED BY THE EXCAVATION, THE ENTIRE LANE WIDTH SHALL BE SAW-CUT, REMOVED, AND REPLACED.

2. TACK COAT: FULL TACK COAT COVERAGE ON ALL VERTICAL SURFACES PER SECTION 32 12 14.

3. ASPHALT PAVEMENT: USE ASPHALT H.M.A SPECIFIED IN SECTION 32 12 05 AND SECTION 32 12 03.
   A) INSTALL IN LIFTS NO GREATER THAN 3" AFTER COMPACTION.
   B) COMPACT EACH LIFT IN CONFORMANCE WITH SECTION 32 12 03.
   C) PLANE OFF SURFACE DISTORTIONS THAT EXCEED 1/4" DEVIATION IN 10'. COAT PLANED SURFACES WITH A CATIONIC OR ANIONIC EMULSION AS APPROVED BY CITY ENGINEER.
   D) USE 1/2" GRADATION PER SECTION 32 12 05.

4. CRACK SEAL TRENCH JOINTS, COORDINATE WITH CITY ENGINEERING.

5. EQUIPMENT: ALL ASPHALT PAVEMENT SHALL BE INSTALLED WITH MECHANICAL PAVING EQUIPMENT UNLESS OTHERWISE APPROVED BY THE CITY ENGINEER.

6. TRENCH BACKFILL SHALL CONFORM TO APWA SECTION 33 05 20 "BACKFILLING TRENCHES." SPECIFICALLY SUBSECTION 2.1, "BACKFILL MATERIALS." USE "GRANULAR BACKFILL BORROW" PER APWA SECTION 31 05 13 FOR ALL AREAS UNDER EXISTING, NEW OR FUTURE ROADWAYS OR TRAILS, OTHERWISE BACKFILL SHALL CONFORM TO GRANULAR BORROW (I.E. SUBSECTION 2.2 OF APWA SECTION 31 05 13)

7. ASPHALT AND UBC THICKNESS SHALL BE THE MINIMUM THICKNESS OUTLINED IN HERRIMAN CITY STANDARD, OR ASPHALT AND UBC THICKNESS SHALL BE 1 INCH THICKER THAN THE EXISTING SECTION, WHICHEVER IS MORE STRINGENT.

8. PIPE ZONE HAUNCHING AND BACKFILL MATERIAL SHALL BE SAND PER APWA SECTION 31 05 13. LIFTS AND COMPACTION SHALL BE PER APWA STANDARD PLAN 382.

9 JOINT TRENCHING NOT ALLOWED FOR ANY PUBLIC UTILITIES INCLUDING BUT NOT LIMITED TO WATER, SECONDARY WATER, SEWER OR STORM DRAIN.

NO.	REVISION DESCRIPTION	DATE
1	2024 STANDARDS UPDATE REVISION	5/23/2024

THIS DOCUMENT AND ANY ILLUSTRATIONS HEREON ARE PROVIDED AS STANDARD CONSTRUCTION DETAILS WITHIN HERRIMAN CITY. DEVIATION FROM THIS DOCUMENT REQUIRES APPROVAL OF HERRIMAN CITY. HERRIMAN CITY CANNOT BE HELD LIABLE FOR MISUSE OR CHANGES REGARDING THIS DOCUMENT.

HERRIMAN CITY

HERRIMAN CITY
ENGINEERING DEPARTMENT
CULINARY WATER
CULINARY AND SECONDARY WATER TRENCH

CW-02

5/28/2024 5:17 PM Q:\ENGINEERING\STANDARDS\CITY STANDARDS\WORKING EDITION\CAD\SECTION 6 STANDARD DRAWINGS\CW\CW-02.DWG

***REFER TO PARTS LIST ON CW-PL FOR APPROVED PARTS MODELS.**

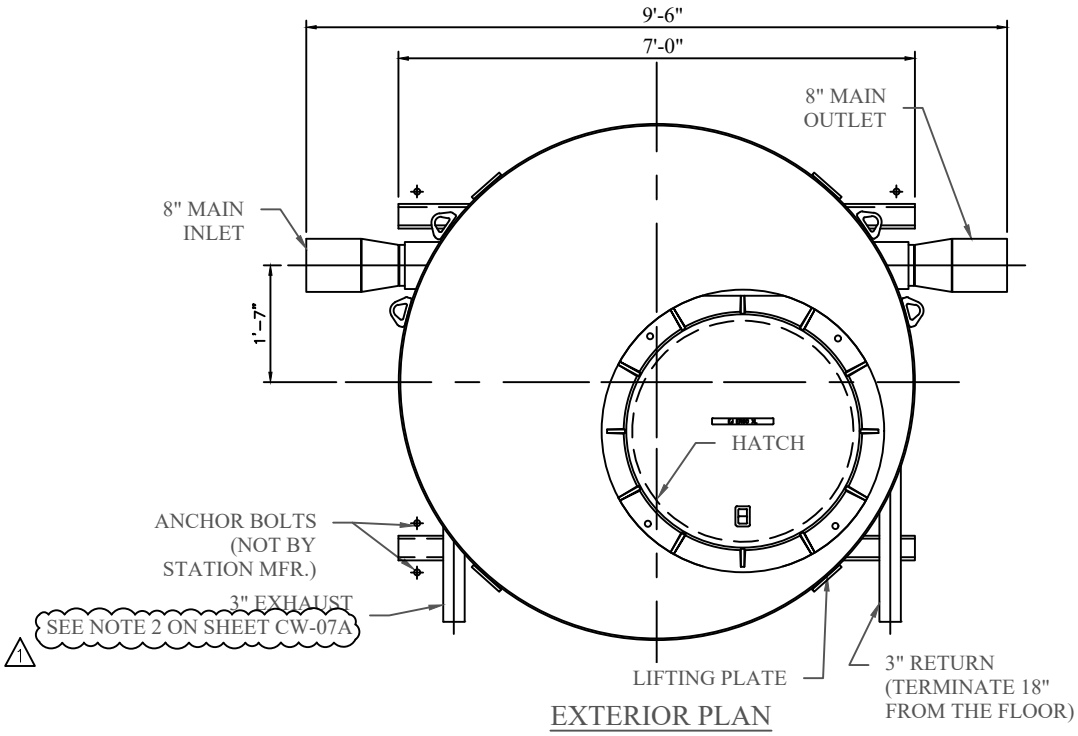

EXTERIOR PLAN

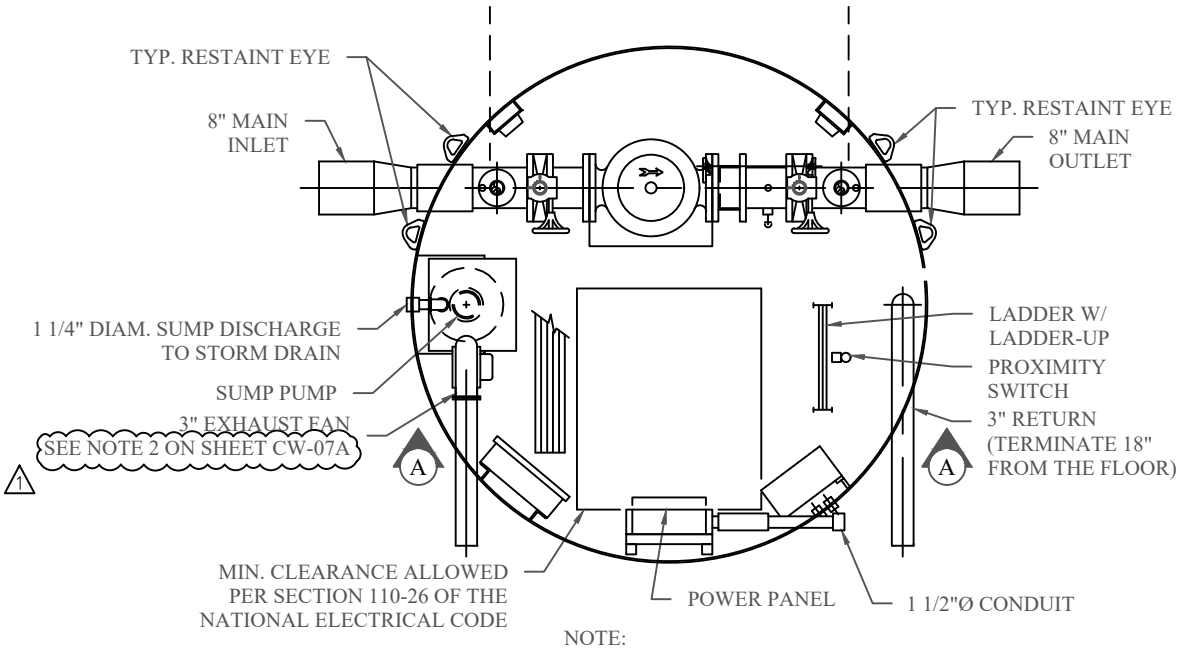

NOTE:
CAPSULE DESIGNED FOR H20 TRAFFIC LOADING.

INTERIOR PLAN

GENERAL NOTES:

1. ALL PIPING AND EQUIPMENT SHALL BE ADEQUATELY SUPPORTED AND BRACED
2. CONTRACTOR SHALL CONFORM TO THE MANUFACTURE PRODUCT SUBMITTAL.
3. INLET AND OUTLET PRESSURE SETTINGS SHALL BE VERIFIED WITH HERRIMAN CITY PRIOR TO ORDERING ASSEMBLY.

NO.	REVISION DESCRIPTION	D-TE
1	2024 EDITION	5/24/2024

THIS DOCUMENT -ND -NY ILLUSTR-TIONS HEREON -RE PROVIDED -S ST-ND-RD CONSTRUCTION DET-ILS WITHIN HERRIM-N CITY. DEVI-TION FROM THIS DOCUMENT REQUIRES -PPROV-L OF HERRIM-N CITY. HERRIM-N CITY C-NNOT BE HELD LI-BLE FOR MISUSE OR CH-NGES REG-RDING THIS DOCUMENT.

HERRIMAN CITY

HERRIMAN CITY
ENGINEERING DEPARTMENT
CULINARY WATER
PRESSURE REDUCING VALVE (PRV) EFI STATION

CW-07

5/24/2024 3:20 PM Q:\ENGINEERING\STANDARDS\CITY STANDARDS\WORKING EDITION\CAD\SECTION 6 STANDARD DRAWINGS\CW\CW-07.DWG

*REFER TO PARTS LIST ON CW-PL FOR APPROVED PARTS MODELS.

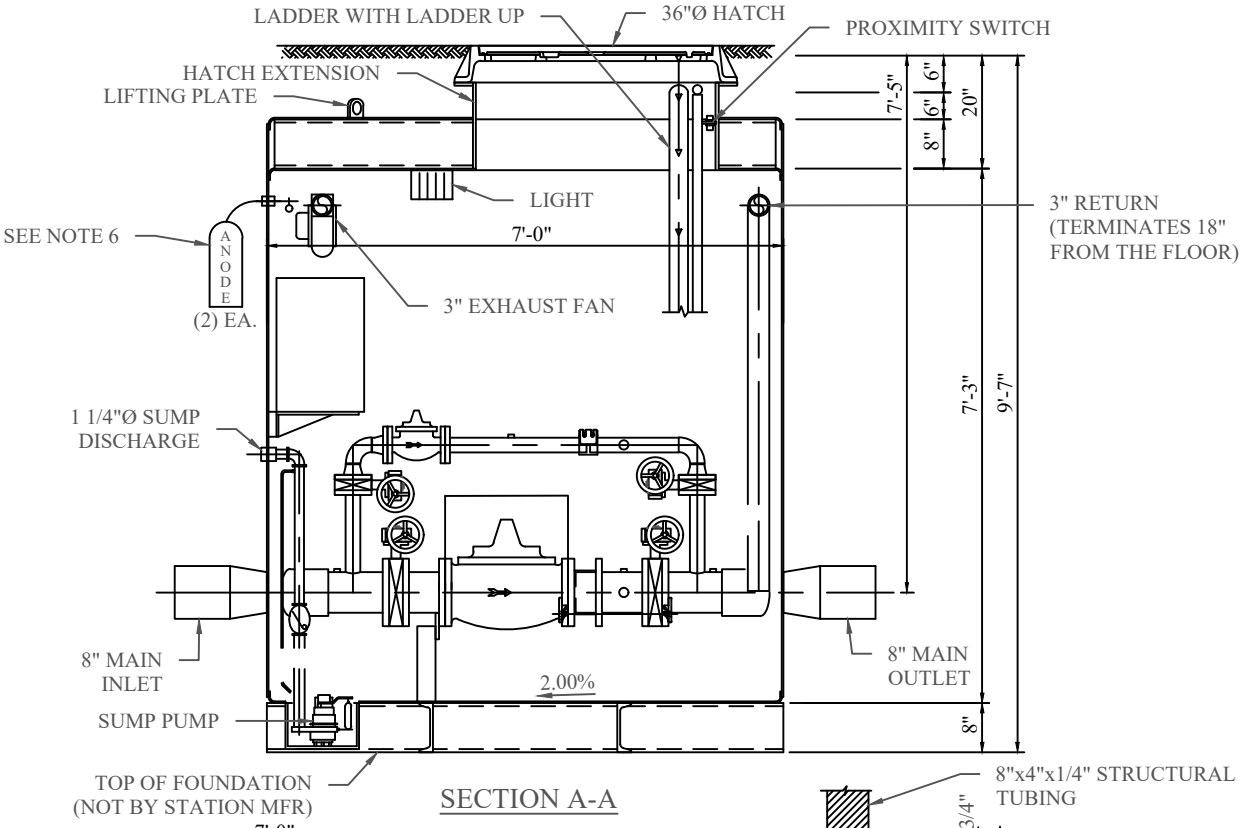

SECTION A-A

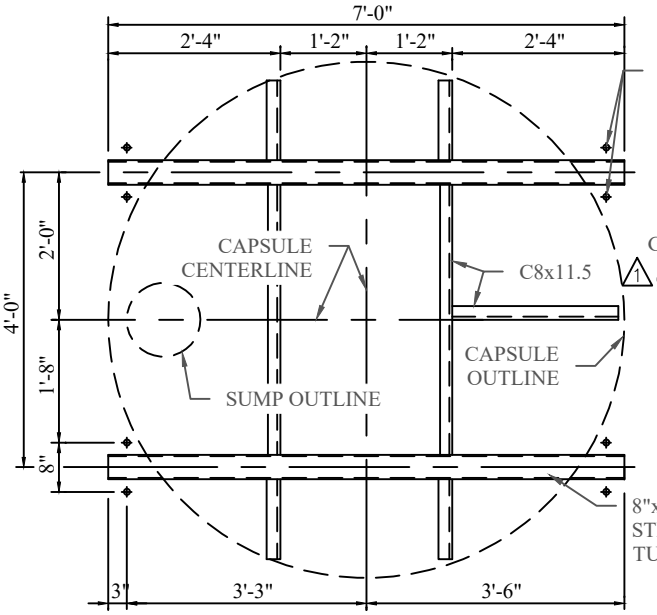

SKID PLAN

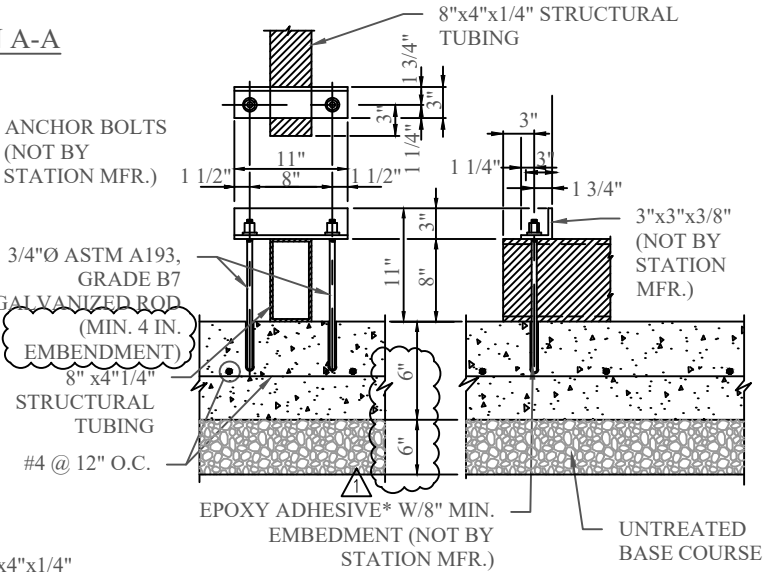

TYPICAL ANCHOR DETAIL

NOTES:
1. ANCHOR ANGLE, BOLTS, NUTS, & ADHESIVE CAPSULE NOT BY STATION MFR. CONCRETE MUST HAVE A MINIMUM F'c OF 3500 PSI FOR PROPER ANCHORAGE.
2. PAD IS TO BE SIZED TO ACCOMODATE THE PRV SIZE.

CONTRACTORS NOTES:
1. INSTALLING CONTRACTOR PROVIDED EXHAUST AND AIR VENT PIPING SHALL BE GALVANIZED STEEL.
2. EXHAUST AND AIR VENT CAPS PROVIDED BY INSTALLING CONTRACTOR, SHALL BE MUSHROOM TYPE. SEE DETAILS CW-09 & CW-09A.
3. INSTALLING CONTRACTOR SHALL PROVIDE FULL METER ENCLOSURE (SEE DETAIL SL-12 & SL-12A) FOR METER BASE AND PROVIDE POWER TO METER BASE. PRESSURE REDUCING STATION SHALL BE FULLY FUNCTIONING STATION.
4. SUMP PUMP AND DEHUMIDIFIER MUST BE POWERED UP AND TURNED ON IMMEDIATELY AFTER STATION IS INSTALLED.
5. VAULT FLOOR IS LEVEL. PAD MUST BE SET AT 2% GRADE TOWARDS DRAIN. DO NOT SHIM STATION. IT IS INTENDED THAT THE MAIN FLOOR MEMBERS BE IN CONTINUOUS CONTACT WITH THE CONCRETE PAD.
6. ANODE SHALL BE PLACED WITHIN RIGHT OF WAY BUT OUTSIDE OF ROADWAY (E.G. PARKSTRIP). AN ANODE TEST STATION MUST BE INCLUDED. INSPECTION OF ANODE BAGS BY PW INSPECTOR AND WATER DEPARTMENT REQUIRED PRIOR TO BACKFILLING.
7. A GROUNDING ROD, SHALL BE CONNECTED TO THE EFI VAULT AND INSTALLED OUTSIDE THE FOOTPRINT OF THE VAULT.

NO.	REVISION DESCRIPTION	DATE
1	2024 EDITION	12/11/2023

THIS DOCUMENT AND ANY ILLUSTRATIONS HEREON ARE PROVIDED AS STANDARD CONSTRUCTION DETAILS WITHIN HERRIMAN CITY. DEVIATION FROM THIS DOCUMENT REQUIRES APPROVAL OF HERRIMAN CITY. HERRIMAN CITY CANNOT BE HELD LIABLE FOR MISUSE OR CHANGES REGARDING THIS DOCUMENT.

HERRIMAN CITY

HERRIMAN CITY
ENGINEERING DEPARTMENT
CULINARY WATER
PRESSURE REDUCING VALVE (PRV) EFI STATION

CW-07A

6/6/2024 1:04 PM Q:\ENGINEERING\STANDARDS\CITY STANDARDS\WORKING EDITION\CAD\SECTION 6 STANDARD DRAWINGS\CW\CW-07A.DWG

***REFER TO PARTS LIST ON CW-00 FOR APPROVED PARTS MODELS.**

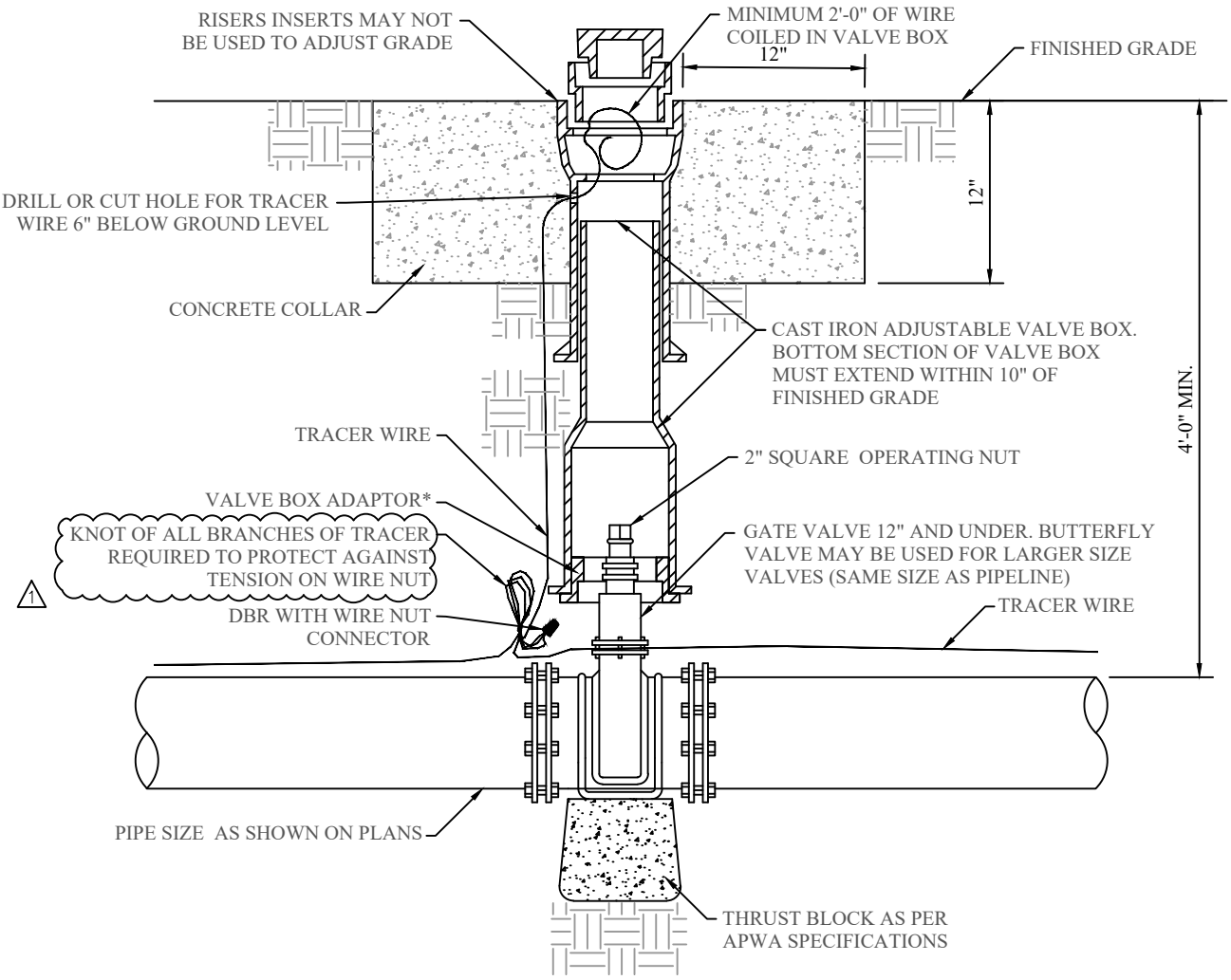

CULINARY

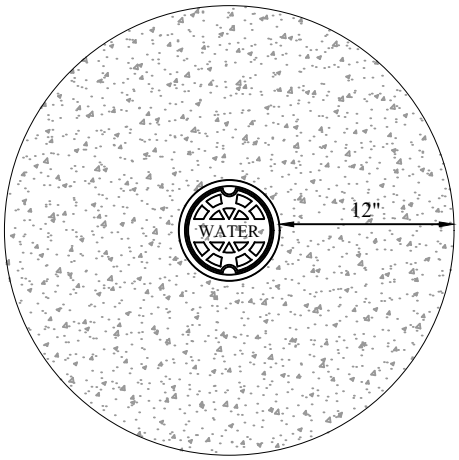

PLAN

NOTES:

1. VALVE BOX SHALL BE CLEAN, PLUMB AND PROPERLY ALIGNED ON THE VALVE.

NO.	REVISION DESCRIPTION	DATE
1	2024 EDITION	12/8/2023

THIS DOCUMENT AND ANY ILLUSTRATIONS HEREON ARE PROVIDED AS STANDARD CONSTRUCTION DETAILS WITHIN HERRIMAN CITY. DEVIATION FROM THIS DOCUMENT REQUIRES APPROVAL OF HERRIMAN CITY. HERRIMAN CITY CANNOT BE HELD LIABLE FOR MISUSE OR CHANGES REGARDING THIS DOCUMENT.

HERRIMAN CITY

HERRIMAN CITY
ENGINEERING DEPARTMENT
CULINARY WATER
WATER VALVE

CW-08

5/28/2024 5:14 PM Q:\ENGINEERING\STANDARDS\CITY STANDARDS\WORKING EDITION\CAD\SECTION 6 STANDARD DRAWINGS\CW\CW-08.DWG

***REFER TO PARTS LIST ON CW-PL FOR APPROVED PARTS MODELS.**

MUSHROOM VENT CAP DETAIL

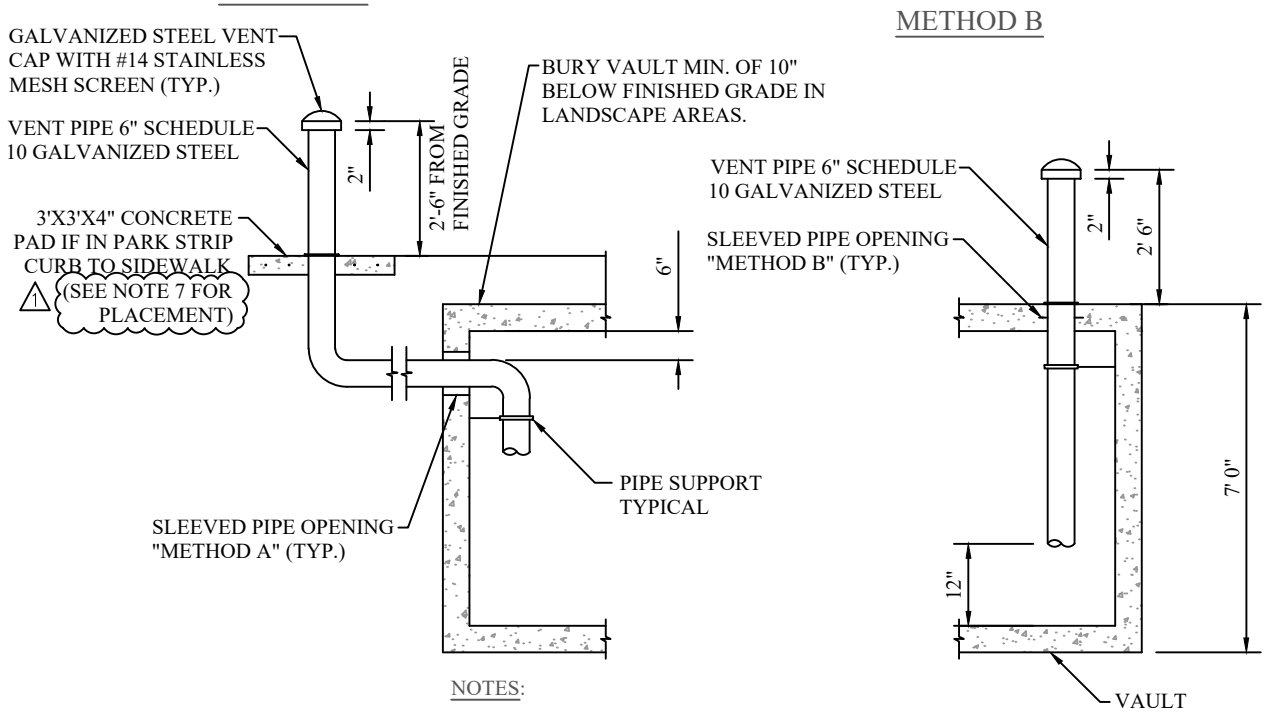

NOTES:

1. ALL VAULT PENETRATIONS MUST BE SEALED USING LINK SEAL OR APPROVED EQUAL.

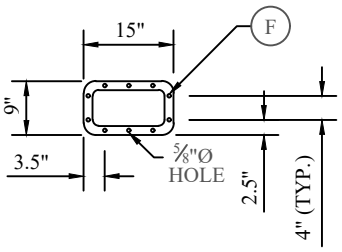

SECTION-VENT COVER

PARTS LIST		
ITEM	QTY	DESCRIPTION
Ⓐ	1	TS 1/4" x 12" x 6" x 2'-6"
Ⓑ	1	TS 1/4" x 12" x 6" x 12"
Ⓒ	1	1/4" PL - 6" x 12"
Ⓓ	2	1/4" PL - 9" x 15"
Ⓔ	4	3/4" DIAM. x 4" H.S.A.
Ⓕ	10	1/2" DIAM. x 3" BREAKAWAY BOLTS

NOTES:

1. SIZE OF VENT COVER CAN VARY DEPENDING ON SIZE OF VENT.
2. OPEN TO AIR- PLACE A NO. 14 MESH S.S. SCREEN OVER THE OPEN END OF PIPE. ATTACH W/S.S. FASTENERS.
3. HOT DIPPED GALVANIZED STEEL STAND PIPE FOR AIR VENT.
4. 1 1/2" MIN. CHAMFER ALL AROUND CONCRETE BASE.
5. 36" CONCRETE BASE FRONT OF WALK TO TOP BACK OF CURB.
6. TOP BACK OF CURB TO VENT PIPE OR VENT COVER SHALL BE A MINIMUM DISTANCE OF 18".

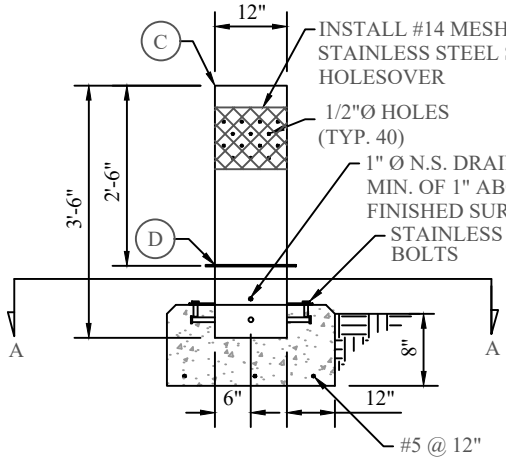

VENT COVER

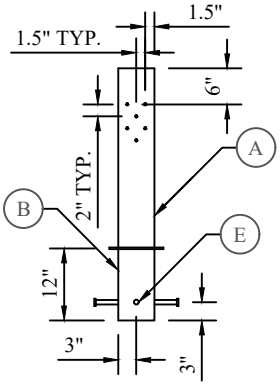

SIDE VIEW A-A
(ITEMS REMOVED FOR CLARITY)

NO.	REVISION DESCRIPTION	D-TE
⚠	2024 EDITION	12/11/2023

THIS DOCUMENT -ND -NY ILLUSTR-TIONS HEREON -RE PROVIDED -S ST-ND-RD CONSTRUCTION DET-ILS WITHIN HERRIM-N CITY. DEVI-TION FROM THIS DOCUMENT REQUIRES -PPROV-L OF HERRIM-N CITY. HERRIM-N CITY C-NNOT BE HELD LI-BLE FOR MISUSE OR CH-NGES REG-RDING THIS DOCUMENT.

HERRIMAN CITY

HERRIMAN CITY
ENGINEERING DEPARTMENT
CULINARY WATER
VENT COVER VENT DETAIL

CW-09

6/25/2024 3:59 PM Q:\ENGINEERING\STANDARDS\CITY STANDARDS\WORKING EDITION\CAD\SECTION 6 STANDARD DRAWINGS\05 - CW\CW-09.DWG

***REFER TO PARTS LIST ON CW-PL FOR APPROVED PARTS MODELS.**

GOOSENECK VENT DETAIL

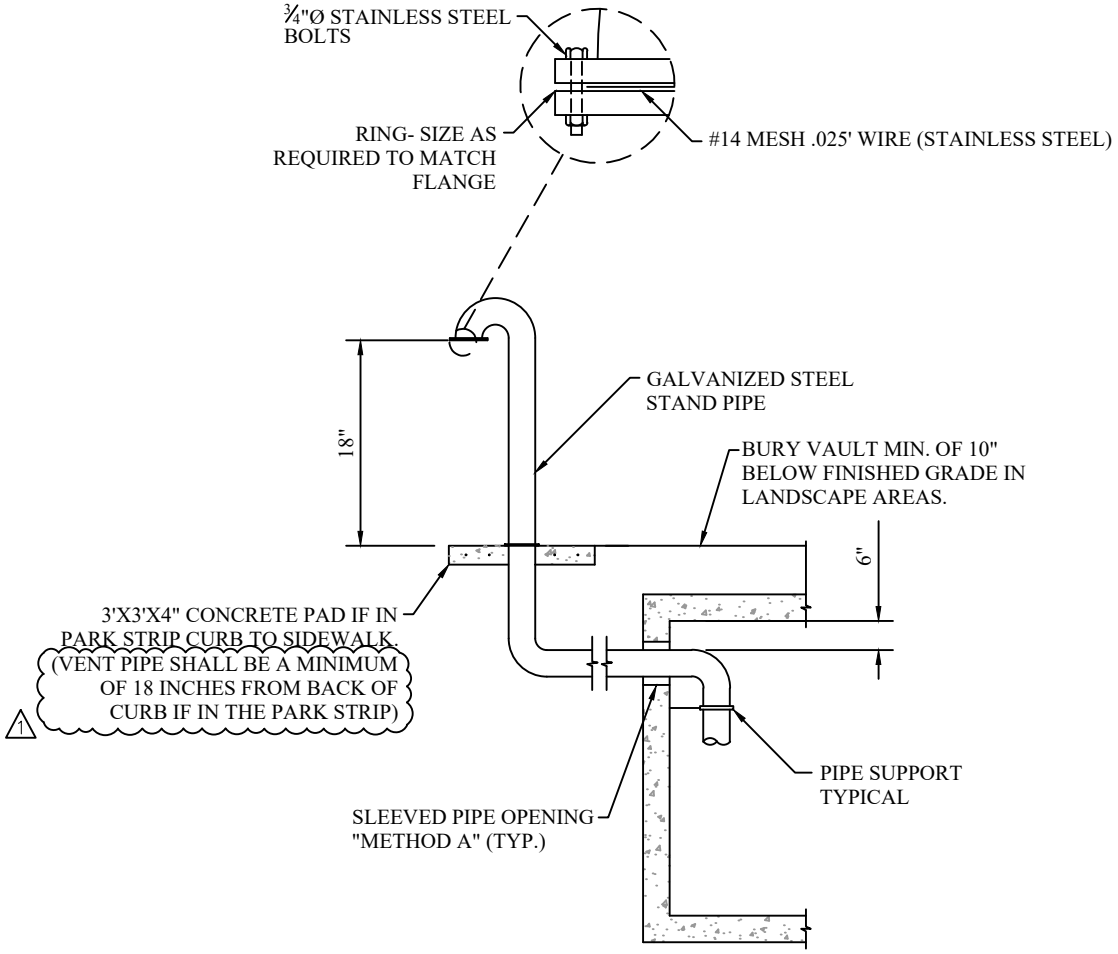

12/11/2023 4:40 PM Q:\ENGINEERING\STANDARDS\CITY STANDARDS\WORKING EDITION\CAD\SECTION 6 STANDARD DRAWINGS\CW\CW-09A.DWG

NO.	REVISION DESCRIPTION	D-TE
1	2024 EDITION	12/11/2023

THIS DOCUMENT -ND -NY ILLUSTR-TIONS HEREON -RE PROVIDED -S ST-ND-RD CONSTRUCTION DET-ILS WITHIN HERRIM-N CITY. DEVI-TION FROM THIS DOCUMENT REQUIRES -PPROV-L OF HERRIM-N CITY. HERRIM-N CITY C-NNOT BE HELD LI-BLE FOR MISUSE OR CH-NGES REG-RDING THIS DOCUMENT.

HERRIMAN CITY

HERRIMAN CITY
ENGINEERING DEPARTMENT
CULINARY WATER
VENT DETAIL

CW-09A

***REFER TO PARTS LIST ON CW-PL FOR APPROVED PARTS MODELS.**

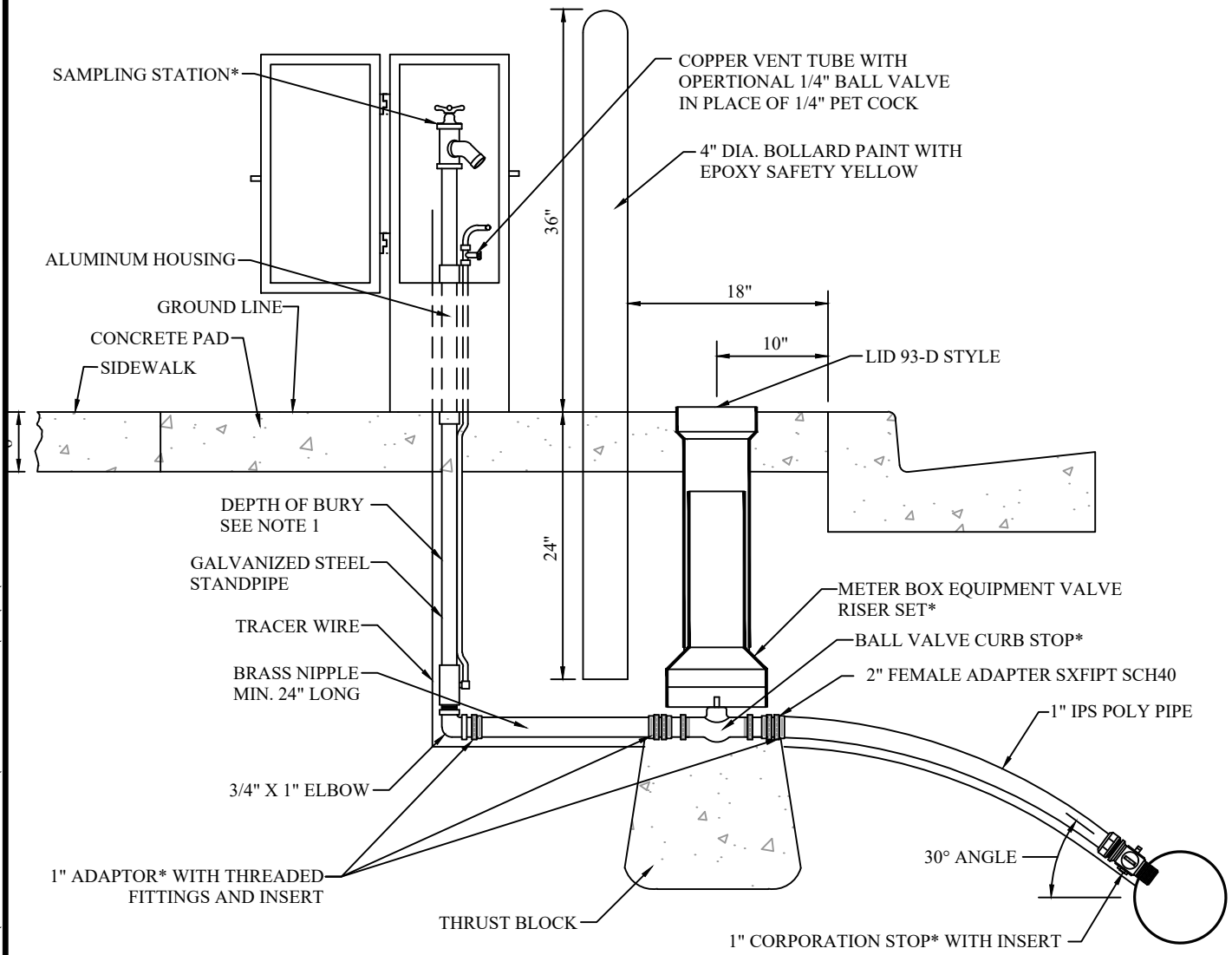

SECTION VIEW

NOTES:

1. SAMPLING STATIONS SHALL BE 4'-0" BURY, WITH A 3/4" FIP INLET, AND A 3/4" UNTHREADED NOZZLE.
2. ALL STATIONS SHALL BE ENCLOSED IN A LOCKABLE, NONREMOVABLE, ALUMINUM- CAST HOUSING.
3. WHEN OPENED, THE STATION SHALL REQUIRE NO KEY FOR OPERATION, AND THE WATER WILL FLOW IN AN ALL BRASS WATERWAY.
4. ALL WORKING PARTS WILL ALSO BE OF BRASS AND BE REMOVABLE FROM ABOVE GROUND WITH NO DIGGING.
5. A COPPER VENT TUBE WILL ENABLE EACH STATION TO BE PUMPED FREE OF STANDING WATER TO PREVENT FREEZING AND TO MINIMIZE BACTERIA GROWTH.
6. ALL DEVELOPERS ARE REQUIRED TO INSTALL A SAMPLING STATION FOR EVERY 80 LOTS OR ONE PER DEVELOPMENT FOR DEVELOPMENTS SMALLER THAN 80 LOTS.

NO.	REVISION DESCRIPTION	D-TE

THIS DOCUMENT -ND -NY ILLUSTR-TIONS HEREON -RE PROVIDED -S ST-ND-RD CONSTRUCTION DET-ILS WITHIN HERRIM-N CITY. DEVI-TION FROM THIS DOCUMENT REQUIRES -PPROV-L OF HERRIM-N CITY. HERRIM-N CITY C-NNOT BE HELD LI-BLE FOR MISUSE OR CH-NGES REG-RDING THIS DOCUMENT.

HERRIMAN CITY

HERRIMAN CITY
ENGINEERING DEPARTMENT
CULINARY WATER
SAMPLING STATION

CW-10

1/9/2021 6:53 PM Q:\ENGINEERING\PROJECTS\06 MUNICIPAL\2016-17\1617-03 DEV STDS AND REQ UPDATE\5-UPDATED DELIVERABLE\STANDARD DRAWINGS\CAD\CW\CW-10.DWG

***REFER TO PARTS LIST ON CW-PL FOR APPROVED PARTS MODELS.**

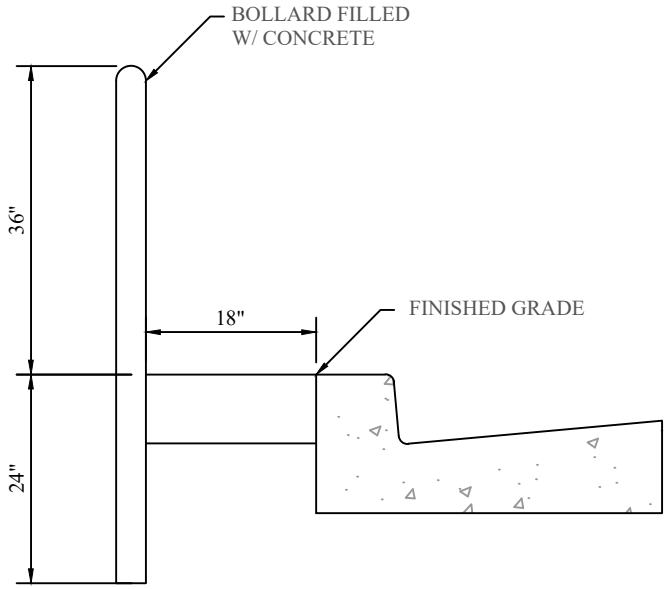

SECTION A-A

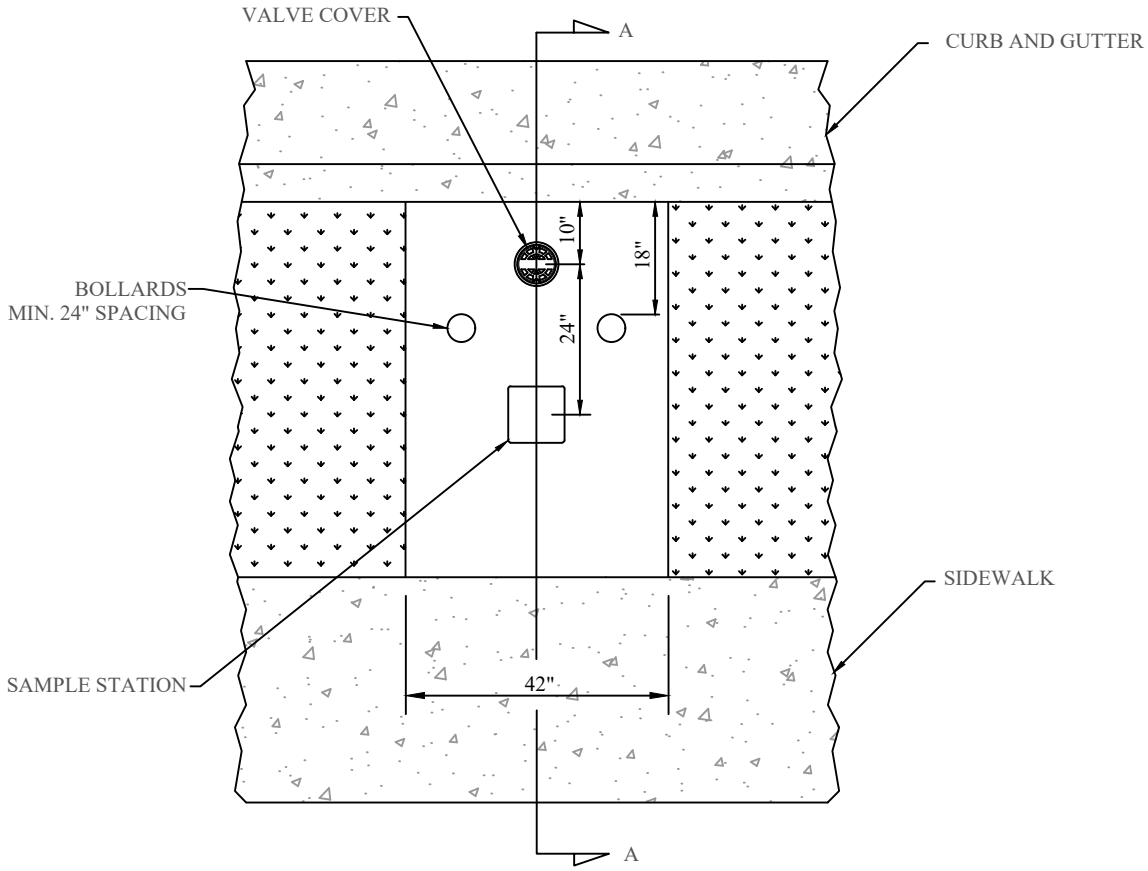

PLAN VIEW

6/25/2024 4:01 PM Q:\ENGINEERING\STANDARDS\CITY STANDARDS\WORKING EDITION\CAD\SECTION 6 STANDARD DRAWINGS\05 - CW\CW-10A.DWG

NO.	REVISION DESCRIPTION	D-TE

THIS DOCUMENT -ND -NY ILLUSTR-TIONS HEREON -RE PROVIDED -S ST-ND-RD CONSTRUCTION DET-ILS WITHIN HERRIM-N CITY. DEVI-TION FROM THIS DOCUMENT REQUIRES -PPROV-L OF HERRIM-N CITY. HERRIM-N CITY C-NNOT BE HELD LI-BLE FOR MISUSE OR CH-NGES REG-RDING THIS DOCUMENT.

HERRIMAN CITY

HERRIMAN CITY
ENGINEERING DEPARTMENT
CULINARY WATER
SAMPLING STATION

CW-10A

***REFER TO PARTS LIST ON CW-PL FOR APPROVED PARTS MODELS.**

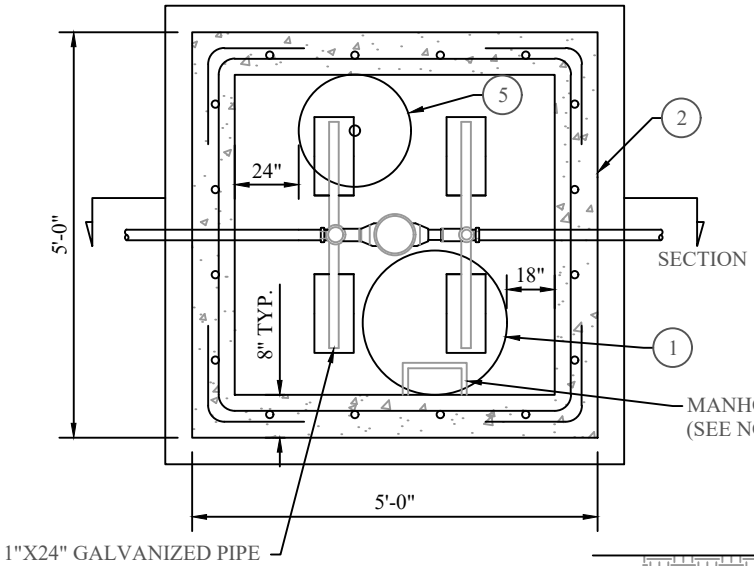

PLAN

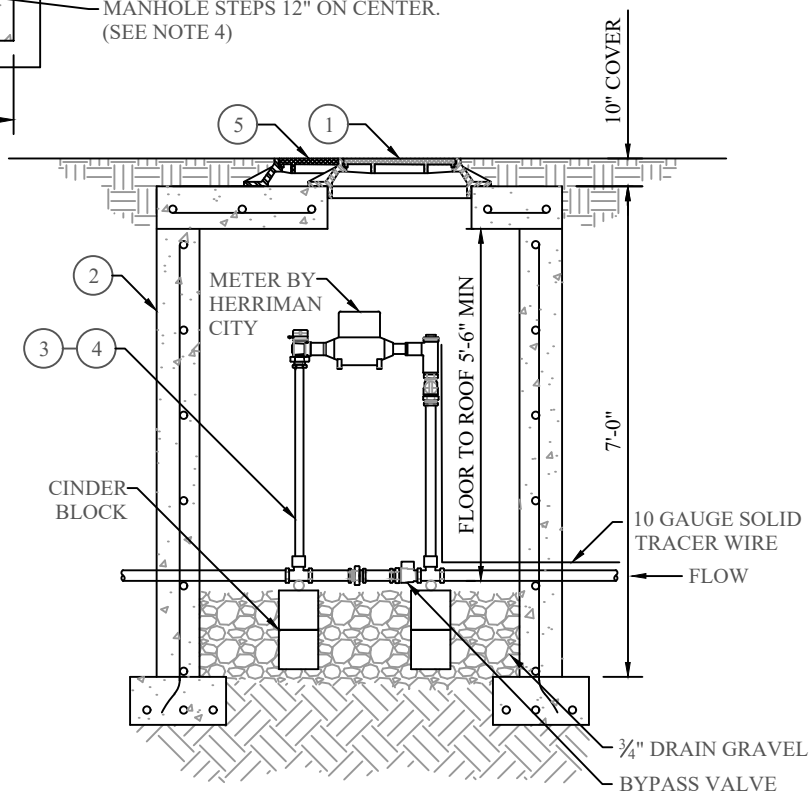

SECTION

LEGEND		
NO.	ITEM	DESCRIPTION
①	30" FRAME & COVER	APWA PLAN NO. 502
②	CONCRETE BOX	APWA PLAN NO. 522
③	1-1/2" CUSTOM SETTER WITH BYPASS	SEE PARTS LIST*
④	2" CUSTOM SETTER WITH BYPASS	SEE PARTS LIST*
⑤	23" FRAME & COVER W/2" HOLE & METER BARREL	SEE CW-01 & CW-01A

NOTES:

1. ALL VAULTS THAT REQUIRE MECHANICAL OR ELECTRICAL COMPONENTS SHALL BE EQUIPPED WITH TWO 120 VAC/ GFCI COMMERCIAL GRADE RECEPTACLES WITH WATER TIGHT COVERS, A 100 WATT INCANDESCENT VAPOR TIGHT LED LIGHT FIXTURE WITH PROTECTIVE CAGE, A FRACTIONAL HP HERMETICALLY SEALED EXHAUST FAN TO REMOVE TOTAL AIR VOLUME 30 TIMES PER HOUR, AND ALL CONDUIT SHALL BE RIGID STEEL. THE FAN AND LIGHT SWITCHES SHALL BE LOCATED WITH ARM'S REACH OF THE ENTRANCE. A 100 AMP SERVICE PANEL SHALL BE PROVIDED.
2. WHEN VAULTS ARE LOCATED IN PAVEMENT, TRAFFIC RATED LIDS ARE REQUIRED.
3. ALL 1 1/2" AND 2" METER VAULTS SHALL BE 5' X 5' X 5'-6" AND SHALL HAVE A 30" RING AND LID, 23" STANDARD METER BOX RING AND LID AND STAIRS. ALL VAULTS IN LANDSCAPED AREAS MUST HAVE A MINIMUM OF 10" OF COVER TO FINISHED GRADE.
4. FIRST MANHOLE STEP MUST BE PLACED WITHIN 24" OF FINISHED GRADE.

6/25/2024 4:15 PM Q:\ENGINEERING\STANDARDS\CITY STANDARDS\WORKING EDITION\CAD\SECTION 6 STANDARD DRAWINGS\05 - CW\CW-11.DWG

NO.	REVISION DESCRIPTION	D-TE

THIS DOCUMENT -ND -NY ILLUSTR-TIONS HEREON -RE PROVIDED -S ST-ND-RD CONSTRUCTION DET-ILS WITHIN HERRIM-N CITY. DEVI-TION FROM THIS DOCUMENT REQUIRES -PPROV-L OF HERRIM-N CITY. HERRIM-N CITY C-NNOT BE HELD LI-BLE FOR MISUSE OR CH-NGES REG-RDING THIS DOCUMENT.

HERRIMAN CITY

HERRIMAN CITY
ENGINEERING DEPARTMENT
CULINARY WATER
1 ½" AND 2" METER

CW-11

***REFER TO PARTS LIST ON CW-PL FOR APPROVED PARTS MODELS.**

TYPE B-DIRECT TAP

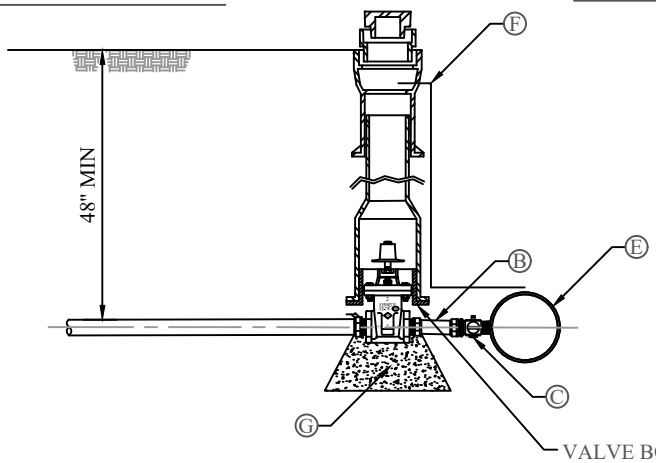

TYPE A-SADDLE CLAMP TAP

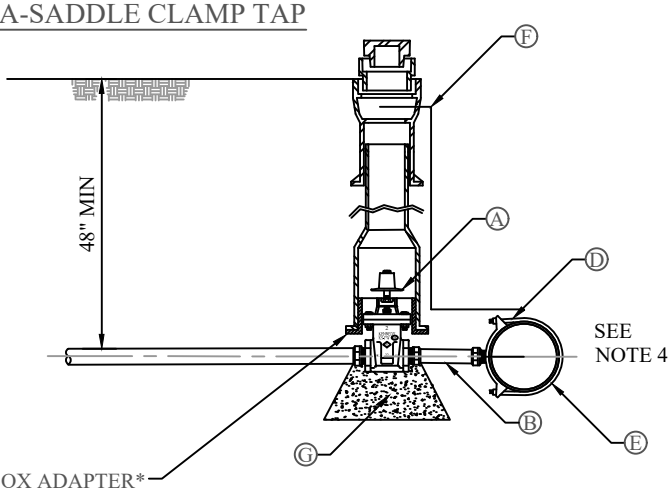

TYPICAL 1- 1/2" AND 2" SERVICE TAPS

NOTES:

1. ALL FITTINGS SHALL BE COMPRESSION FITTINGSWITH INSERTS.
2. REFER TO CW-08 FOR VALVE BOX DETAILS.

LEGEND		
NO.	ITEM	DESCRIPTION
Ⓐ	GATE VALVE	2"
Ⓑ	BRASS NIPPLE	BRASS NIPPLE. 6" MAX. LENGTH
Ⓒ	1-1/2" OR 2" CORPORATION STOP	SEE PARTS LIST*
Ⓓ	SERVICE SADDLE CLAMP	SEE PARTS LIST*
Ⓔ	WATER MAIN PIPE	SEE NOTE 4
Ⓕ	TRACER WIRE	10G TYPE K (SOFT) 1
Ⓖ	THRUST BLOCK	

NOTES FOR 1- 1/2" AND 2" SERVICE TAPS:

1. INSPECTION: PRIOR TO BACKFILLING, SECURE INSPECTION OF INSTALLATION BY CITY.
2. BACKFILL: INSTALL AND COMPACT ALL BACKFILL MATERIAL PER APWA SECTION 31 05 20.
3. TAPPING: PLACE TAPS A MIN. 24" APART. USE A TAPPING TOOL WHICH IS SIZED CORRESPONDING TO THE SIZE OF THE SERVICE LINE TO BE INSTALLED. NO TAPS WITHIN 24" OF THE END OF PIPE OR ANY FITTING.
4. PVC PIPE: A SERVICE SADDLE CLAMP IS REQUIRED ON ALL PVC PIPE.
   DUCTILE IRON PIPE: DUCTILE IRON PIPE MAY BE DIRECT TAPPED USING CC THREADS.
5. TAPE: TEFLON TAPE IS REQUIRED ON ALL TAPS AND THREADED FITTINGS

NOTES FOR 1 1/2" AND 2" SERVICE LINE:

1. INSPECTION: PRIOR TO BACKFILLING, SECURE INSPECTION OF INSTALLATION BY ENGINEER.
2. BACKFILLING: INSTALL ALL BACKFILL MATERIAL PER APWA SECTION 31 05 20 IN LIFTS NOT EXCEEDING 6" AFTER COMPACTION. COMPACT EACH LIFT TO A MIN. RELATIVE DENSITY OF 95%.
3. METER: HERRIMAN CITY WILL PROVIDE AND INSTALL METER.
4. PIPE: INSTALL IPS POLY PIPE TO 10 FT BACK OF WALK. 1
5. PLACEMENT:
   A) DO NOT INSTALL METER BOX UNDER DRIVEWAY APPROACHES, SIDEWALKS, OR CURB AND GUTTER.
   B) IN NEW CONSTRUCTION, INSTALL METER NEAR CENTER OF LOT IN PARKSTRIP.

NO.	REVISION DESCRIPTION	D-TE
1	2024 ST-ND-RDS UPD-TE REVISION	6/25/2024

THIS DOCUMENT -ND -NY ILLUSTR-TIONS HEREON -RE PROVIDED -S ST-ND-RD CONSTRUCTION DET-ILS WITHIN HERRIM-N CITY. DEVI-TION FROM THIS DOCUMENT REQUIRES -PPROV-L OF HERRIM-N CITY. HERRIM-N CITY C-NNOT BE HELD LI-BLE FOR MISUSE OR CH-NGES REG-RDING THIS DOCUMENT.

HERRIMAN CITY

HERRIMAN CITY
ENGINEERING DEPARTMENT
CULINARY WATER
1 ½" AND 2" METER

CW-11A

6/25/2024 4:43 PM Q:\ENGINEERING\STANDARDS\CITY STANDARDS\WORKING EDITION\CAD\SECTION 6 STANDARD DRAWINGS\05 - CW\CW-11A.DWG

*REFER TO PARTS LIST ON CW-PL FOR APPROVED PARTS MODELS.

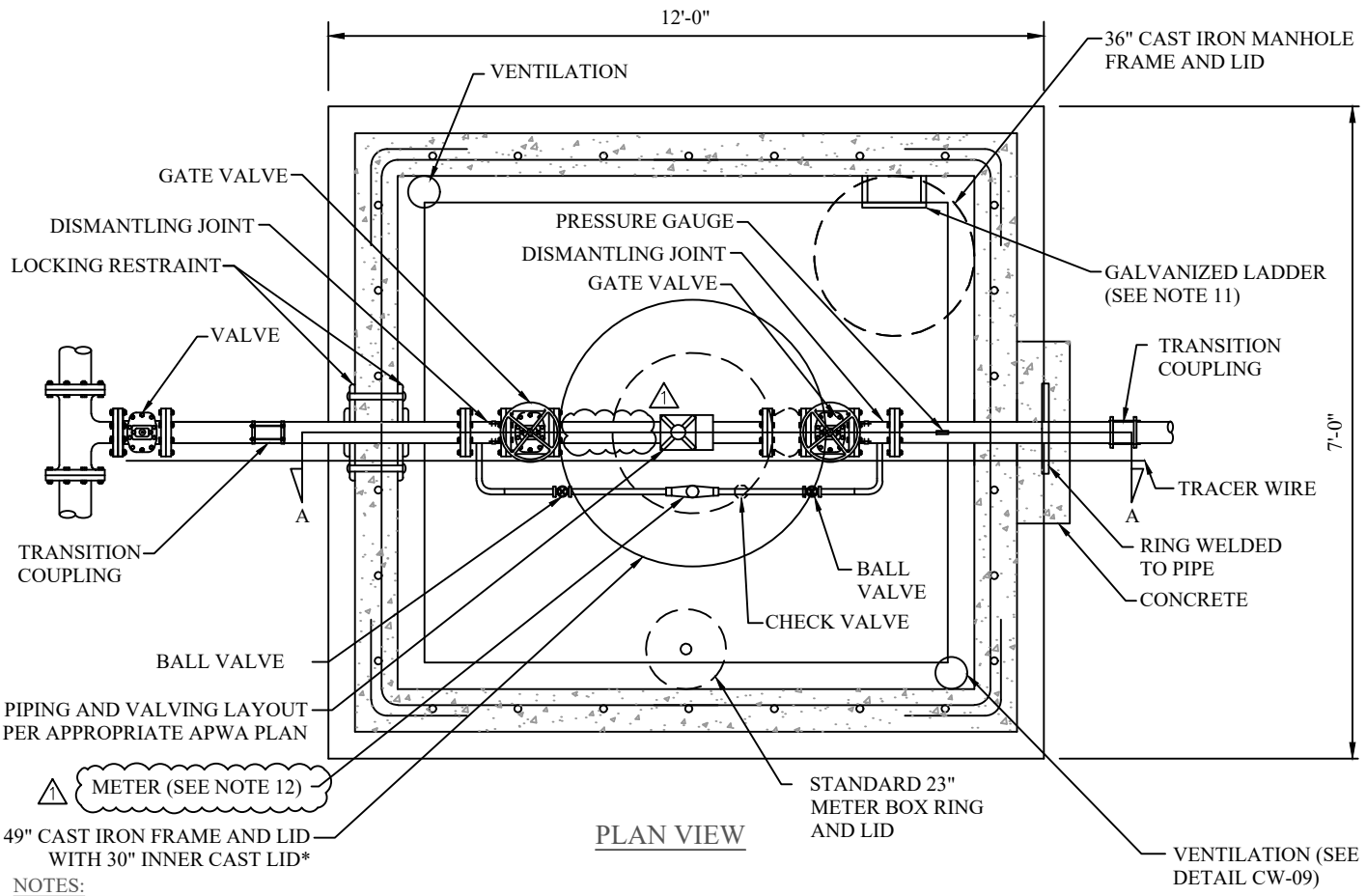

PLAN VIEW

NOTES:

1. ALL VAULT PENETRATIONS MUST BE SEALED USING LINK SEAL OR APPROVED EQUAL.

2. METER VAULTS SHALL MEET HERRIMAN CITY STANDARDS 4.10.19

3. ALL 3" AND LARGER METER VAULTS SHALL BE CONSTRUCTED WITH A 2" BY- PASS LINE. THE BY- PASS LINE SHALL HAVE A 2" METER* (2) ISOLATION VALVES, AND A DISMANTLING JOINT. BY-PASS PIPING MUST BE ALL BRASS.

4. THE PIPING AND VALVING LAYOUTS SHALL FOLLOW THOSE FOUND IN THE APWA MANUAL PLAN NO. 523, 525, 527, AND 529. HOWEVER THE HERRIMAN CITY ENGINEER WILL GIVE FINAL APPROVAL OF DESIGN. MAINLINE PIPING SHALL BE D.I.P. TO TRANSITION COUPLINGS.

5. PIPE SUPPORTS* SHALL BE SPACED SUCH THAT THE MAXIMUM SPAN BETWEEN SUPPORTS AND THE WALL IS 6'-0".

6. RESTRAINTS SHALL BE EITHER A LOCKING RESTRAINT OR A THRUST RESTRAINT.

7. 3" METERS AND LARGER SHALL BE PURCHASED AND INSTALLED BY THE DEVELOPER OR CONTRACTOR AND THE CITY WILL INSPECT. METER BRAND AND TYPE MUST BE APPROVED BY CITY.

8. VAULT AND LID- VAULT APWA NO. 505 STANDARD (REBAR)
   RATED- PEDESTRIAN H:10
   TRAFFIC H:20

9. PAINT ALL BLACK DIP PIPE EPOXY COATED SAFETY BLUE.

10. EPOXY PAINT ALL DIP AND APPURTENANCES IN ACCORDANCE TO SECTION 5.

11. GALVANIZED LADDER MUST BE SECURELY ASTENED TO WALL. TOP RUNG MUST BE WITHINT 24 INCHES OF FINISHED GRADE. BOTTOM RUNG MUST BE WITHIN 12 INCHES OF THE FLOOR. RUNG SPECS: DIAM SHALL EQUAL 3/4 INCHES, 18 INCHES MINIMUM WIDTH AND SHALL MEET OSHA AND ANSI STANDARDS.

12. BYPASS TO BE SIZED BY ENGINEER OF RECORD, MINIMUM SIZE TO BE 2 INCHES. 1

NO.	REVISION DESCRIPTION	D-TE
1	2024 EDITION	12/11/2023

THIS DOCUMENT -ND -NY ILLUSTR-TIONS HEREON -RE PROVIDED -S ST-ND-RD CONSTRUCTION DET-ILS WITHIN HERRIM-N CITY. DEVI-TION FROM THIS DOCUMENT REQUIRES -PPROV-L OF HERRIM-N CITY. HERRIM-N CITY C-NNOT BE HELD LI-BLE FOR MISUSE OR CH-NGES REG-RDING THIS DOCUMENT.

HERRIMAN CITY

HERRIMAN CITY
ENGINEERING DEPARTMENT
CULINARY WATER
TYPICAL 3" + METER VAULT

CW-12

6/25/2024 5:06 PM Q:\ENGINEERING\STANDARDS\CITY STANDARDS\WORKING EDITION\CAD\SECTION 6 STANDARD DRAWINGS\05 - CW\CW-12.DWG

***REFER TO PARTS LIST ON CW-PL FOR APPROVED PARTS MODELS.**

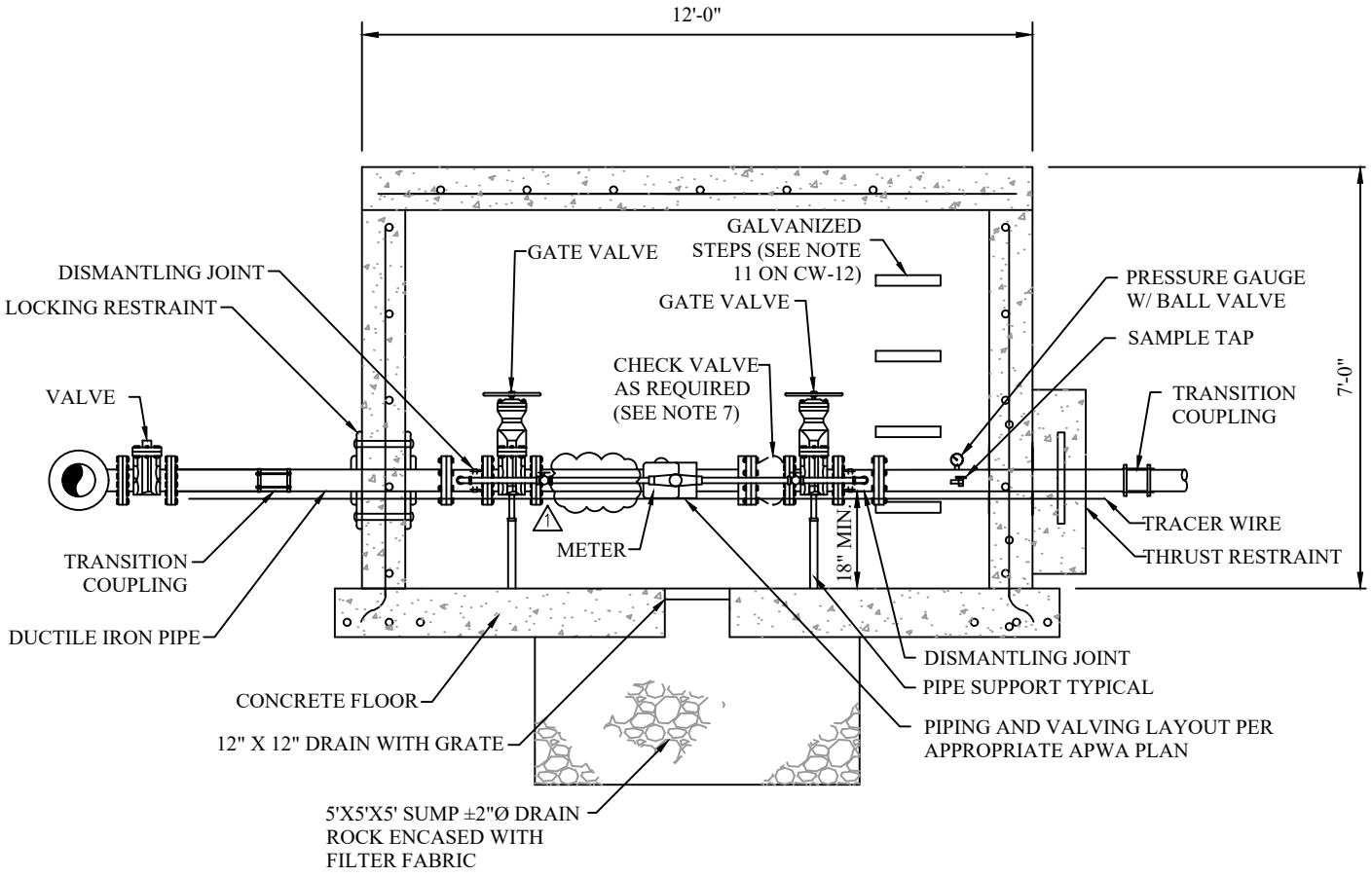

SECTION A-A

NOTES:

1. DISMANTLING JOINTS SHALL BE USED ON ALL PIPING BETWEEN ISOLATION GATE VALVES FOR CASE OF MAINTENANCE; PLACEMENT SHALL BE APPROVED BY THE CITY ENGINEER. SEE PARTS LIST FOR APPROVED DISMANTLING JOINTS.

2. ALL VAULTS THAT REQUIRE MECHANICAL OR ELECTRICAL COMPONENTS SHALL BE EQUIPPED WITH TWO 120 VAC/ GFCI COMMERCIAL GRADE RECEPTACLES WITH WATER TIGHT COVERS, A 100 WATT INCANDESCENT VAPOR TIGHT LED LIGHT FIXTURE WITH PROTECTIVE CAGE, A FRACTIONAL HP HERMETICALLY SEALED EXHAUST FAN TO REMOVE TOTAL AIR VOLUME 30 TIMES PER HOUR, AND ALL CONDUIT SHALL BE SCHEDULE 80 PVC. THE FAN AND LIGHT SWITCHES SHALL BE LOCATED WITH ARM'S REACH OF THE ENTRANCE. A 100 AMP SERVICE PANEL SHALL BE PROVIDED.

3. ALL ISOLATION VALVES LOCATED INSIDE VAULTS SHALL BE HAND OPERATED WITH A WHEEL.

4. ALL VAULTS SHALL BE EQUIPPED WITH INTAKE AND EXHAUST VENTS. THE VENTS SHALL BE LOCATED AT OPPOSITE ENDS OF THE VAULT WITH THE INTAKE TERMINATING 12 INCHES FROM THE FLOOR AND THE EXHAUST TERMINATING WITHIN 12 INCHES OF THE CEILING.

5. WHEN VAULTS ARE LOCATED IN PAVEMENT, TRAFFIC RATED LIDS ARE REQUIRED.

6. ALL VAULTS SHALL HAVE 23" STANDARD METER BOX RING AND LID FOR METER READING EQUIPMENT. ALL VAULTS IN LANDSCAPED AREA MUST HAVE A MINIMUM OF 10" OF COVER TO FINISHED GRADE.

7. CHECK VALVE ONLY REQUIRED IF INSTALLED ON A CLOSED SYSTEM. IF WATER SYSTEM LOOPING IS REQUIRED, DO NOT INSTALL A CHECK VALVE. CHECK VALVE ON BYPASS REQUIRED IN ALL CASES.

⚠1

NO.	REVISION DESCRIPTION	D-TE
⚠1	2024 EDITION	12/11/2023

THIS DOCUMENT -ND -NY ILLUSTR-TIONS HEREON -RE PROVIDED -S ST-ND-RD CONSTRUCTION DET-ILS WITHIN HERRIM-N CITY. DEVI-TION FROM THIS DOCUMENT REQUIRES -PPROV-L OF HERRIM-N CITY. HERRIM-N CITY C-NNOT BE HELD LI-BLE FOR MISUSE OR CH-NGES REG-RDING THIS DOCUMENT.

HERRIMAN CITY

HERRIMAN CITY
ENGINEERING DEPARTMENT
CULINARY WATER
TYPICAL 3" + METER VAULT

CW-12A

Q:\ENGINEERING\STANDARDS\CITY STANDARDS\WORKING EDITION\CAD\SECTION 6 STANDARD DRAWINGS\05 - CW\CW-12A.DWG
6/25/2024 5:11 PM

*REFER TO PARTS LIST ON CW-PL FOR APPROVED PARTS MODELS.

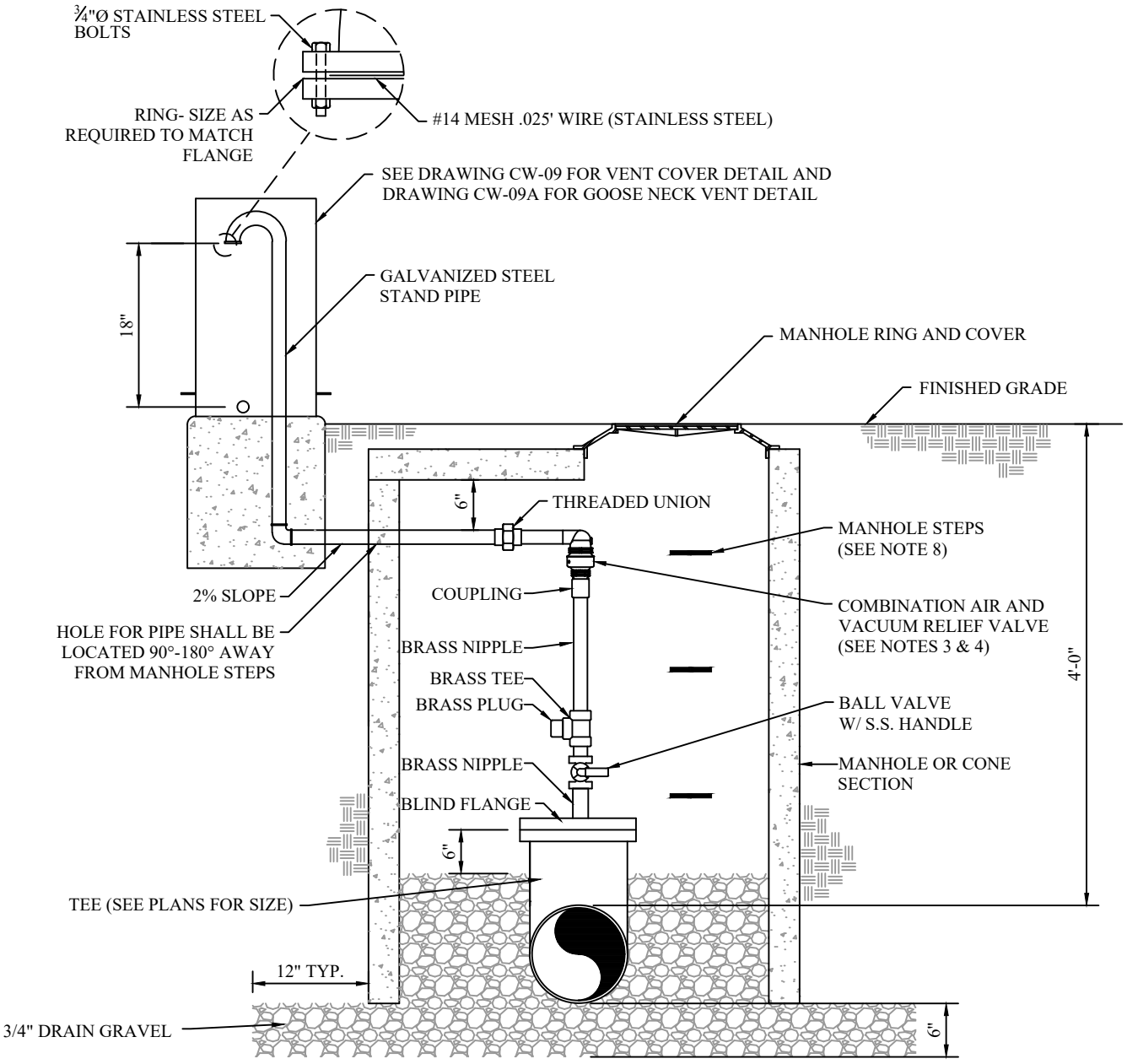

NOTES:

1. VENT SHALL BE LOCATED IN PARK STRIP OR CITY PROPERTY.
2. SCHEDULE 80 PVC OR POLY PIPE MAY BE USED BETWEEN THREADED UNION AND THE STAND PIPE.
3. SEE PARTS LIST FOR APPROVED COMBINATION AIR VALVES.
4. AIR VALVE SHALL BE SIZED BY PROFESSIONAL ENGINEER OF RECORD. (2 INCH MINIMUM).
5. AIR VACUUM VALVES OR AIR RELEASE VALVES ARE NOT ALLOWED WITHOUT APPROVAL FROM THE CITY ENGINEER.
6. 2" AIR VACUUM RELIEF VALVES MAY USE TAP W/ SADDLE.
7. 4" AIR VACUUM RELEASE VALVES AND LARGER REQUIRE A TEE (MJxMJxFLG).
8. FIRST STEP MUST BE PLACED WITHIN 24 IN. OF FINISHED GRADE. BOTTOM STEP MUST BE WITHIN 12 INCHES OF THE FLOOR

NO.	REVISION DESCRIPTION	DATE

THIS DOCUMENT AND ANY ILLUSTRATIONS HEREON ARE PROVIDED AS STANDARD CONSTRUCTION DETAILS WITHIN HERRIMAN CITY. DEVIATION FROM THIS DOCUMENT REQUIRES APPROVAL OF HERRIMAN CITY. HERRIMAN CITY CANNOT BE HELD LIABLE FOR MISUSE OR CHANGES REGARDING THIS DOCUMENT.

HERRIMAN CITY

HERRIMAN CITY
ENGINEERING DEPARTMENT
CULINARY WATER
AIR COMBINATION VALVE

CW-13

6/25/2024 5:15 PM Q:\ENGINEERING\STANDARDS\CITY STANDARDS\WORKING EDITION\CAD\SECTION 6 STANDARD DRAWINGS\05 - CW\CW-13.DWG

***REFER TO PARTS LIST ON CW-PL FOR APPROVED PARTS MODELS.**

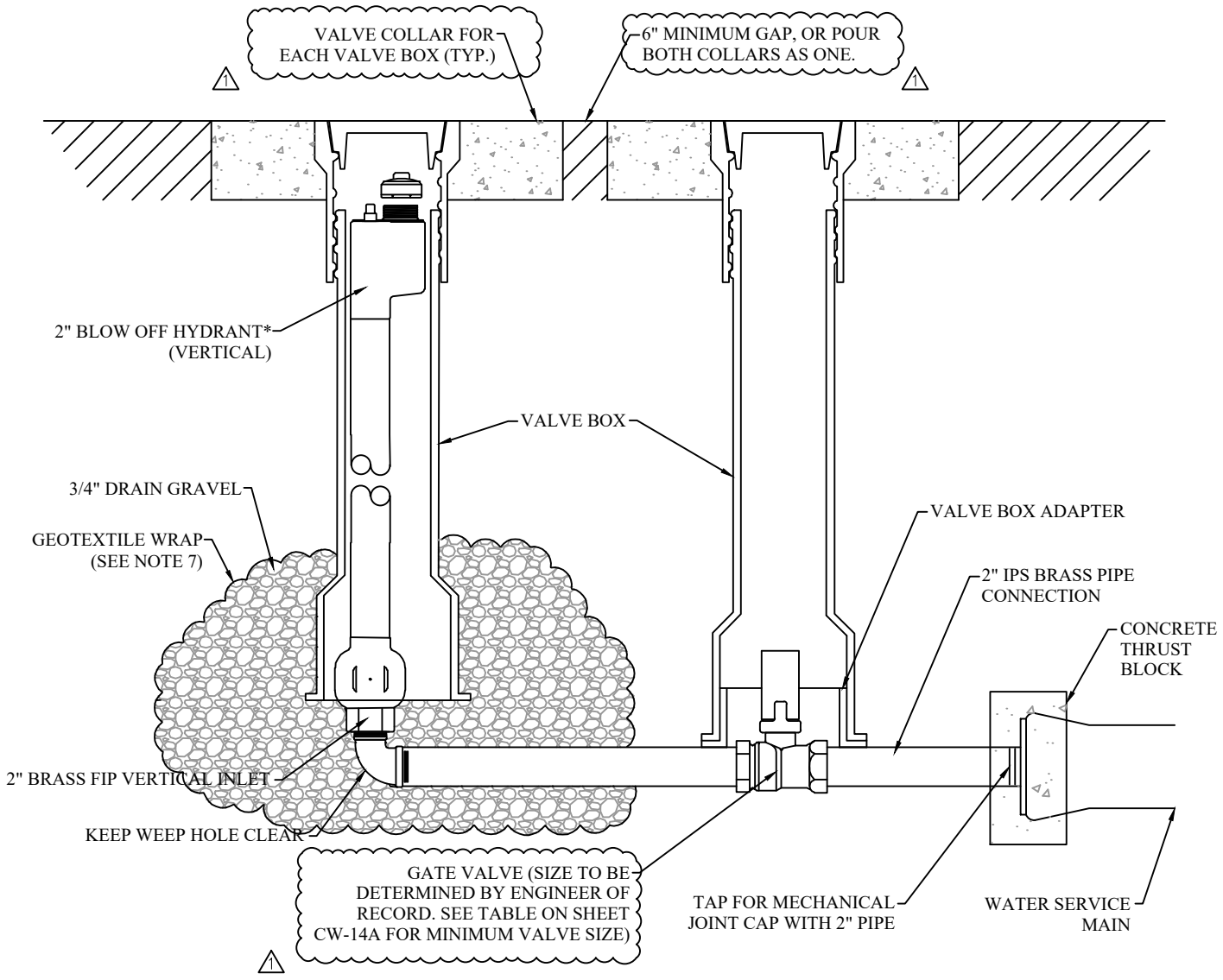

NOTES:

1. INSPECTION: PRIOR TO BACKFILLING AROUND THE ASSEMBLY, SECURE INSPECTION OF INSTALLATION BY ENGINEER.
2. BACKFILL: INSTALL AND COMPACT BACKFILL MATERIAL PER APWA SECTION 31 05 13 IN LIFTS NOT EXCEEDING 6" AFTER COMPACTION. COMPACT EACH LIFT TO A MINIMUM RELATIVE DENSITY OF 95%.
3. WORKING PARTS: ALL WORKING PARTS SHALL BE BRONZE TO BRONZE DESIGN, AND BE SERVICEABLE FROM ABOVE GROUND WITH NO DIGGING.
4. POST HYDRANTS SHALL BE NON- FREEZING, SELF DRAINING TYPE WITH A 36" BURY. HYDRANTS WILL BE FURNISHED WITH A 2" FIP INLET, A NON- TURNING OPERATING ROD, AND SHALL OPEN TO THE LEFT.
5. MAKE SURE TO PLACE THREAD SEALANT ON ALL THREADED CONNECTIONS.
6. INSTALL A GEOTEXTILE WRAP AROUND THE 3/4" DRAIN GRAVEL TO PREVENT SILTING.

NO.	REVISION DESCRIPTION	DATE
1	2024 EDITION	12/11/2023

THIS DOCUMENT -ND -NY ILLUSTR-TIONS HEREON -RE PROVIDED -S ST-ND-RD CONSTRUCTION DET-ILS WITHIN HERRIM-N CITY. DEVI-TION FROM THIS DOCUMENT REQUIRES -PPROV-L OF HERRIM-N CITY. HERRIM-N CITY C-NNOT BE HELD LI-BLE FOR MISUSE OR CH-NGES REG-RDING THIS DOCUMENT.

HERRIMAN CITY

HERRIMAN CITY
ENGINEERING DEPARTMENT
CULINARY WATER
BLOW OFF HYDRANT

CW-14

6/25/2024 5:33 PM Q:\ENGINEERING\STANDARDS\CITY STANDARDS\WORKING EDITION\CAD\SECTION 6 STANDARD DRAWINGS\05 - CW\CW-14.DWG

***REFER TO PARTS LIST ON CW-PL FOR APPROVED PARTS MODELS.**

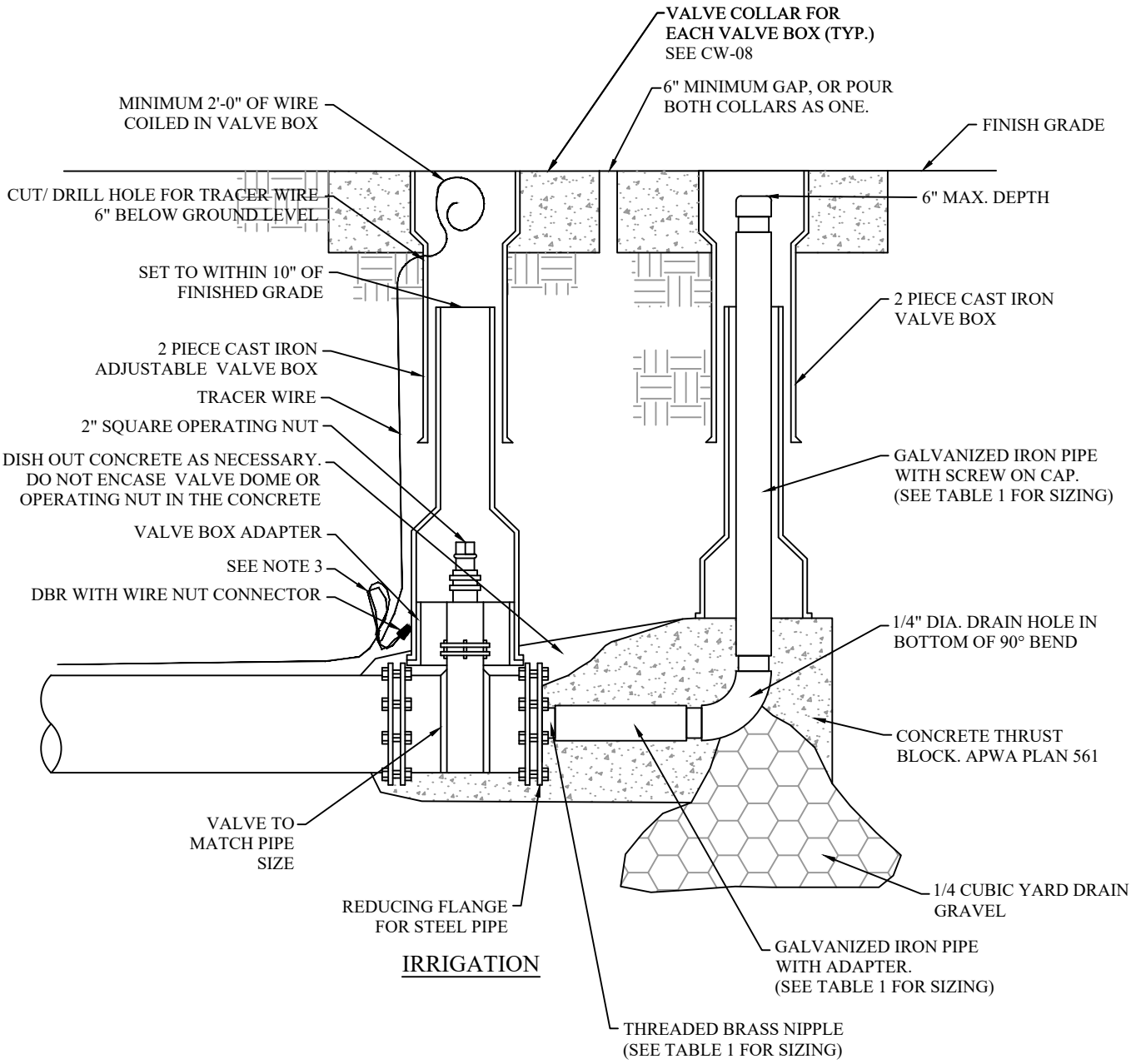

IRRIGATION

MINIMUM SIZE TABLE SEE NOTE 4	
DRAIN LINE SIZE	MAIN LINE SIZE
2"	8" OR SMALLER
4"	10" TO 16"
6"	LARGER THAN 16"

NOTE:

1 VALVE BOX SHALL BE CLEAN, PLUMB AND PROPERLY ALIGNED ON THE VALVE.

2 MINIMUM OVERLAP OF 4" FOR STACKED LOWER BOXES.

3 KNOT OF ALL BRANCHES OF TRACER REQUIRED TO PROTECT AGAINST TENSION ON WIRE NUT.

4 MINIMUM WASHOUT VALVE SIZE TABLE IS A MINIMUM SIZE ONLY. ACTUAL SIZE SHALL BE DETERMINED BY THE ENGINEER OF RECORD FOR THE PROJECT.

NO.	REVISION DESCRIPTION	D-TE
⚠	NEW DR-WING -DDED TO ST-ND-RDS	6/5/2024

THIS DOCUMENT -ND -NY ILLUSTR-TIONS HEREON -RE PROVIDED -S ST-ND-RD CONSTRUCTION DET-ILS WITHIN HERRIM-N CITY. DEVI-TION FROM THIS DOCUMENT REQUIRES -PPROV-L OF HERRIM-N CITY. HERRIM-N CITY C-NNOT BE HELD LI-BLE FOR MISUSE OR CH-NGES REG-RDING THIS DOCUMENT.

HERRIMAN CITY

HERRIMAN CITY
ENGINEERING DEPARTMENT
CULINARY WATER
TEMPORARY WASHOUT VALVE

CW-14A

6/26/2024 8:17 AM Q:\ENGINEERING\STANDARDS\CITY STANDARDS\WORKING EDITION\CAD\SECTION 6 STANDARD DRAWINGS\05 - CW\CW-14A.DWG

*REFER TO PARTS LIST ON CW-PL FOR APPROVED PARTS MODELS.

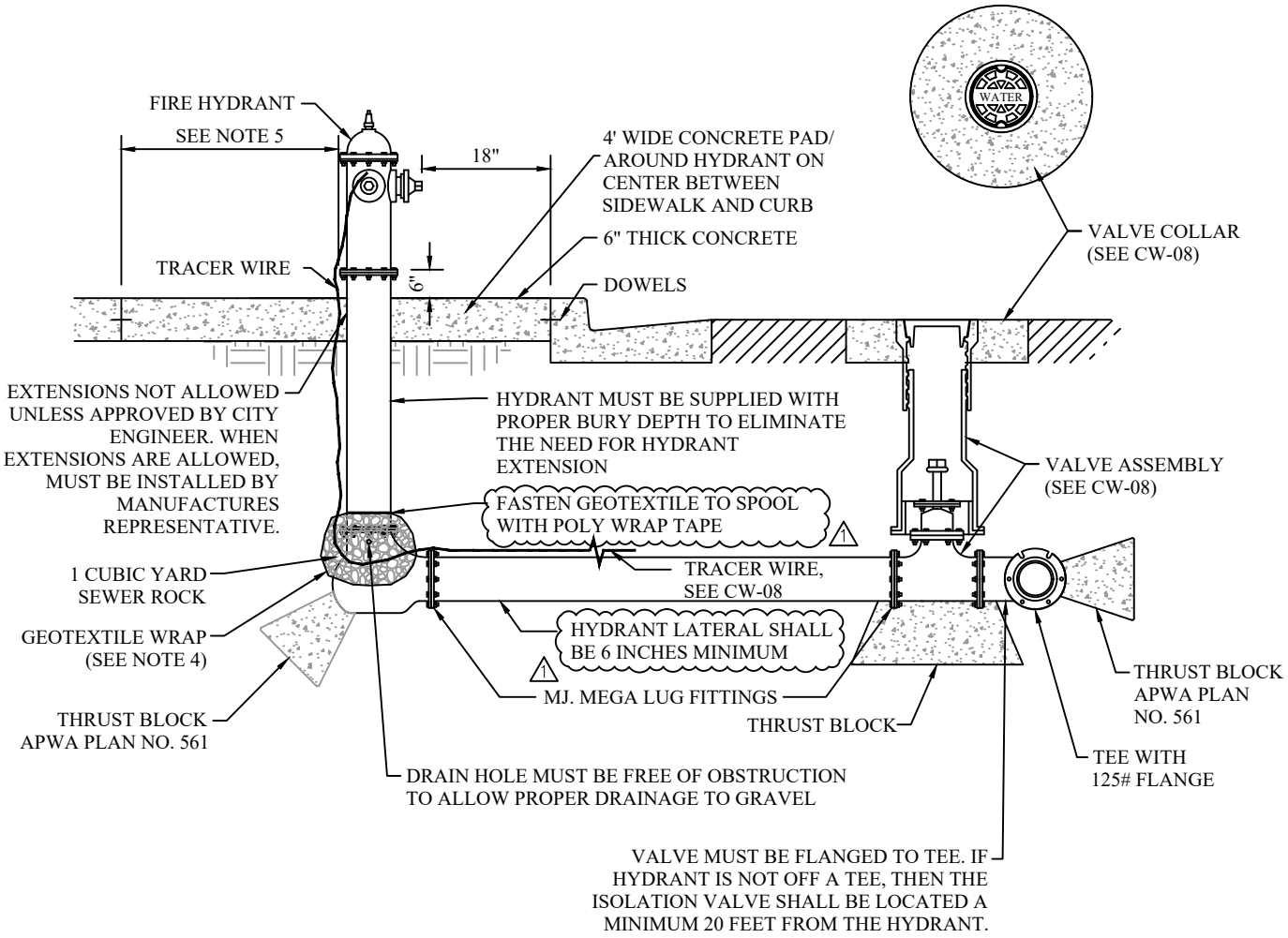

NOTES:

1. POLY WRAP HYDRANT TO BURY LINE.
2. DOWELS 6" CENTER OFF BACK OF SIDEWALK AND BACK OF CURB.
3. 3' MINIMUM AWAY, FROM DRIVE APPROACH, MAILBOX, TREE, METER BOX, UTILITY BOX, OR ANY OTHER OBSTRUCTION.
4. INSTALL A GEOTEXTILE WRAP AROUND THE SEWER ROCK TO PREVENT SILTING.
5. PLACEMENT:
   a) EDGE OF FIRE HYDRANT SHALL BE A MINIMUM DISTANCE OF 6 INCHES FROM THE SIDEWALK EDGE.
   b) FOR RESIDENTIAL: HYDRANT SHALL BE LOCATED WITHIN 2 FT OF A PROPERTY LINE AND SHALL NOT BE WITHIN 5 FT OF A STREETLIGHT, UTILITY BOX, APPURTENCE, OR ANY OBSTACLES.
   c) FOR COMMERCIAL/INDUSTRIAL: HYDRANT SHALL BE LOCATED IN ISLANDS OR MEDIANS SAFE FROM VEHICLE TRAVEL AND OR PEDESTRIAN TRAVEL WAY (SEE NOTE 5A).
   d) CITY OR PUBLIC HYDRANTS: HYDRANT SHALL BE PLACED WITHIN CITY ROW OR PROVIDE EASEMENT PER WATERLINE EASEMENT REQUIREMENTS (HERRIMAN CITY STANDARDS SECTION 3.04.

1

NO.	REVISION DESCRIPTION	D-TE
1	2024 ST-ND-RDS UPD-TE REVISION	5/24/2024

THIS DOCUMENT -ND -NY ILLUSTR-TIONS HEREON -RE PROVIDED -S ST-ND-RD CONSTRUCTION DET-ILS WITHIN HERRIM-N CITY. DEVI-TION FROM THIS DOCUMENT REQUIRES -PPROV-L OF HERRIM-N CITY. HERRIM-N CITY C-NNOT BE HELD LI-BLE FOR MISUSE OR CH-NGES REG-RDING THIS DOCUMENT.

HERRIMAN CITY

HERRIMAN CITY
ENGINEERING DEPARTMENT
CULINARY WATER
FIRE HYDRANT WITH VALVE

CW-15

6/25/2024 6:49 PM Q:\ENGINEERING\STANDARDS\CITY STANDARDS\WORKING EDITION\CAD\SECTION 6 STANDARD DRAWINGS\05 - CW\CW-15.DWG

HERRIMAN CITY APPROVED CULINARY WATER EQUIPMENT LIST

EQUIPMENT TYPE	Model
Dismantling Joints	Romac DJ400
Butterfly Valve	M&H Model 4500 "Linesal III" of approved equal
Gate Valves 2 Inches and Larger	Resilient Wedge Seat, Mueller, Clow or approved equal △1
Swing Check Valve (2-inch to 24-inch)	Mueller Swing-Type, or approved equal
Globe Check Valve (2-inch to 24-inch)	VAL-MATIC model #VM:1400A/1800-S, or approved equal
Control Valve	CLA-VAL
Underground Packaged Pressure Reducing Station	Per Specification 33 12 18
Combination Valves	A.R.I. D-040
Ball Valve Curb Stop	Ford Ball Valve Curb Stop B11-333NL △1 Mueller 102883
Combination Air Valve	A.R.I. D-040 or Approved Equal
Valve Box	Tyler 564A Cast Iron, or approved equal
Valve box adaptor	Adaptor Inc. Model VBA-II, Adaptor II Type C △1
Service Saddle Clamp	Ford FB 202 B Mueller BR2B Series
Dry-Barrell Fire Hydrant	Mueller Super Centurion 250 Model A-423 Waterous WB67-250 Clow Medallion
2" Blow Off Hydrant	Mainguart No. 78 or Approved Equal Truflow #TF500
Hydrant Lock	As manufactured by Kupferle Foundry Co., St. Louis, MO. or approved Equal
1" Corporation Stop	Type A: Ford-FB 1101-4-Q-NL IPS Saddle Type A: Mueller B-25029N if direct tapped Type B: Ford-FB 1001-4-Q-NL CC threaded △1 Type B: Mueller B-25009N
3/4" Water Meter Yoke	Mueller 240B2434-2-49N Ford VBHC72-9558102NL △1 A.Y. McDonald 728-218DWPP
1" Water Meter Yoke	Ford Copper VBHC74-95581-03-NL △1 A.Y. McDonald 728-218DWPP

6/26/2024 7:00 AM Q:\ENGINEERING\STANDARDS\CITY STANDARDS\WORKING EDITION\CAD\SECTION 6 STANDARD DRAWINGS\05 - CW\CW-PL.DWG

NO.	REVISION DESCRIPTION	D-TE
△1	2024 ST-ND-RDS UPD-TE REVISION	6/4/2024

THIS DOCUMENT -ND -NY ILLUSTR-TIONS HEREON -RE PROVIDED -S ST-ND-RD CONSTRUCTION DET-ILS WITHIN HERRIM-N CITY. DEVI-TION FROM THIS DOCUMENT REQUIRES -PPROV-L OF HERRIM-N CITY. HERRIM-N CITY C-NNOT BE HELD LI-BLE FOR MISUSE OR CH-NGES REG-RDING THIS DOCUMENT.

HERRIMAN CITY

HERRIMAN CITY
ENGINEERING DEPARTMENT
CULINARY WATER
CULINARY WATER EQUIPMENT LIST (pg 1 of 3)

CW-PL1

HERRIMAN CITY APPROVED CULINARY WATER EQUIPMENT LIST

EQUIPMENT TYPE	Model
1 1/2" Custom Setter with Bypass	Ford VBHH76-18B-11-66-NL
2" Custom Setter with Bypass	Ford VBHH77-18B-11-77-NL
Water Meter	Neptune 5/8" x 3/4" T-10 Meter with AutoDetect register
2" Water Meter	Neptune T-10 Model
3" Water Meter or Larger	Neptune Mach 10
Meter Barrel Frame and Cover (3/4" & 1" Mtr) For paved surface applications	# Trumbull frame 367-5705, Lid 367-5704 or approved equal.
Meter Barrel Frame and Cover (1 1/2" and 2" Meters) Typical Installation For Landscape ONLY	 Concrete box per APWA 36x36 HDPE Corrugated Meter Barrel
Water Meter Pit Adjusting Ring (For paved surface applications)	30" Barrel: D&L L-2336, 36" Barrel: D&L L-2338 30" Barrel required: B-5024-Ri
Radio Unit	Neptune R900 Pit Meter Interface Unit (MIU) Radio
Sampling Station	Eclipse #88-SS Sampling Station (Manufactured by Kupferle Foundry, St Louis, MO 63102)
1" Female Adaptor Connection	1" Ford Compression Fitting 1644-Q w/ insert Mueller compression fittings w/ insert Ford C16-44QNL or approved equal
1" Female Adaptor	Ford 1644-Q Mueller H-15429N
1" Compression Coupling with Inserts	Ford - C66-44-NL-Q Mueller - H-15400N
MJ Water Valve Connection Joint Restraints	EBAA Iron MEGALUG, Tyler TUFGrip, Star Fittings USA
Vent caps	Christy's Vent Caps manufactured by T. Christy Enterprises, Inc., Anaheim, CA
49" Cast Iron Frame and Lid with 30" Inner Cast Lid	D&L Supply DL A-1381 or equal
Pipe supports	Stanchion Saddle MSS Type 37 Grinnell Figure 264 of approved equal
Galvanized ladder	Provide submittal for city review
Epoxy Adhesive	Hilti Hit-RE-500 Epoxy Adhesive

1

8/1/2025 8:20 AM Q:\ENGINEERING\STANDARDS\CITY STANDARDS\WORKING EDITION\CAD\SECTION 6 STANDARD DRAWINGS\05 -- CW\CW-PL.DWG

NO.	REVISION DESCRIPTION	D-TE
1	2024 ST-ND-RDS UPD-TE REVISION	6/26/2024

THIS DOCUMENT -ND -NY ILLUSTR-TIONS HEREON -RE PROVIDED -S ST-ND-RD CONSTRUCTION DET-ILS WITHIN HERRIM-N CITY. DEVI-TION FROM THIS DOCUMENT REQUIRES -PPROV-L OF HERRIM-N CITY. HERRIM-N CITY C-NNOT BE HELD LI-BLE FOR MISUSE OR CH-NGES REG-RDING THIS DOCUMENT.

HERRIMAN CITY

HERRIMAN CITY
ENGINEERING DEPARTMENT
CULINARY WATER
CULINARY WATER EQUIPMENT LIST (pg 2 of 3)

CW-PL2

HERRIMAN CITY APPROVED CULINARY WATER EQUIPMENT LIST

EQUIPMENT TYPE	Model
Tapping Sleeves (See Section 33 00 11)	Ford FTSS (SS flanges) OR Romac SST111

6/26/2024 7:10 AM Q:\ENGINEERING\STANDARDS\CITY STANDARDS\WORKING EDITION\CAD\SECTION 6 STANDARD DRAWINGS\05 - CW\CW-PL.DWG

NO.	REVISION DESCRIPTION	D-TE
1	2024 ST-ND-RDS UPD-TE REVISION	6/26/2024

THIS DOCUMENT -ND -NY ILLUSTR-TIONS HEREON -RE PROVIDED -S ST-ND-RD CONSTRUCTION DET-ILS WITHIN HERRIM-N CITY. DEVI-TION FROM THIS DOCUMENT REQUIRES -PPROV-L OF HERRIM-N CITY. HERRIM-N CITY C-NNOT BE HELD LI-BLE FOR MISUSE OR CH-NGES REG-RDING THIS DOCUMENT.

HERRIMAN CITY

HERRIMAN CITY
ENGINEERING DEPARTMENT
CULINARY WATER
CULINARY WATER EQUIPMENT LIST (pg 3 of 3)

CW-PL3

*REFER TO PARTS LIST ON SW-PL FOR APPROVED PARTS MODELS.

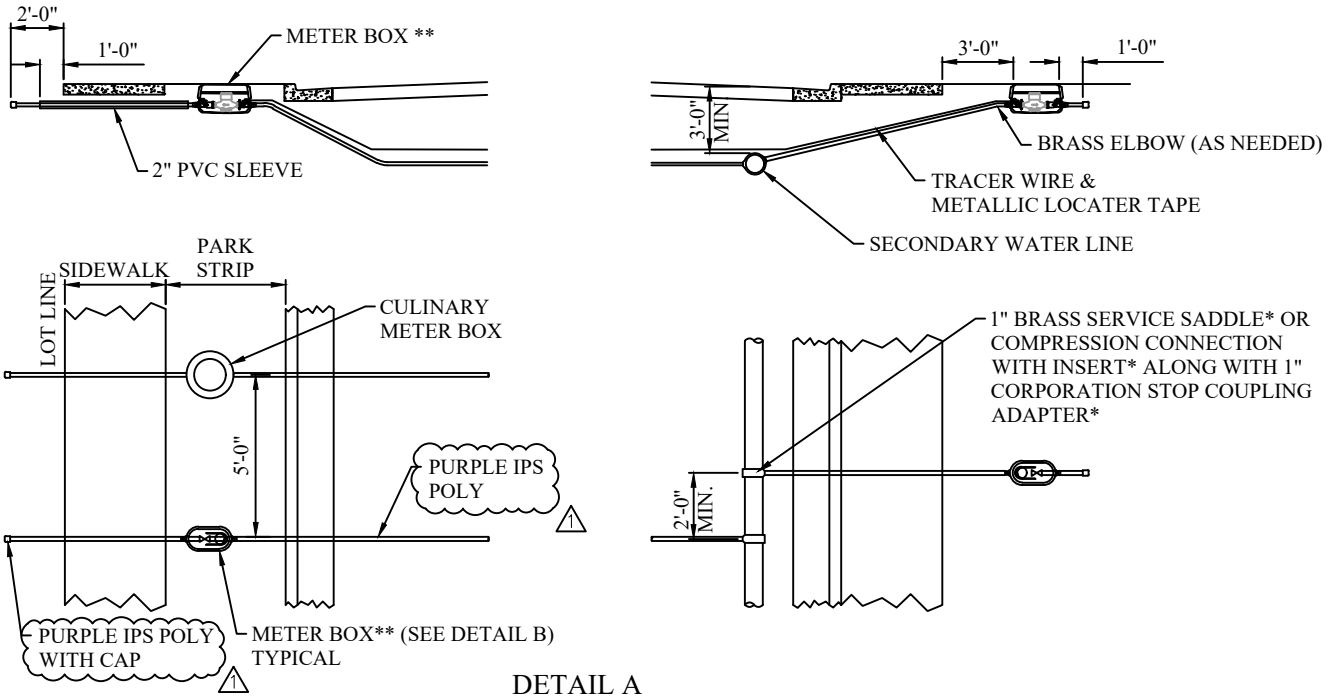

DETAIL A

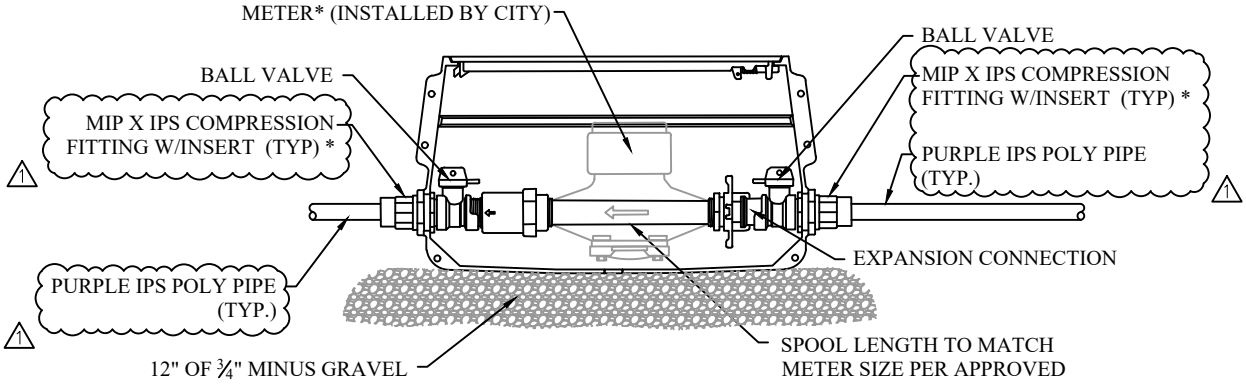

DETAIL B

NOTES:

1. INSPECTION: PRIOR TO BACKFILLING AROUND THE METER BOX, SECURE INSPECTION OF INSTALLATION BY ENGINEER.

2. BACKFILLING: INSTALL ALL BACKFILL MATERIAL PER APWA SECTION 31 05 13 IN LIFTS NOT EXCEEDING 6" AFTER COMPACTION. COMPACT EACH LIFT TO A MINIMUM RELATIVE DENSITY OF 95%.

3. METER BOX: NO GRADE RINGS ALLOWED TO RAISE METER BOX.

4. PLACEMENT:
   A) DO NOT INSTALL METER BOX UNDER DRIVEWAY APPROACHES, SIDEWALKS, OR CURB AND GUTTER

   B) 5' MIN. AWAY , FROM DRIVE APPROACH, MAILBOX, TREE, METER BOX, UTILITY BOX OR ANY OTHER OBSTRUCTION.

8. INSERTS REQUIRED WITH ALL COMPRESSION FITTINGS.

9. YOKE METER BOX MUST BE PLACED AT 90° ANGLE TO STREET. 1

10. TAPPING: PLACE TAPS A MINIMUM 24" APART. USE TAPPING TOOL, WHICH IS SIZED CORRESPONDING TO THE SIZE OF THE SERVICE LINE TO BE INSTALLED. NO TAPS WITHIN 24" OF THE END OF PIPE OR ANY FITTING.

11. TRENCHING SHALL CONFORM TO CW-02.

12. REFERENCE PARTS LIST FOR APPROVED MODELS FOR CONNECTIONS WITH INSERTS.

* SEE PARTS LIST FOR APPROVED YOKE METER BOXES BY SIZE. 1

NO.	REVISION DESCRIPTION	DATE
1	2024 STANDARDS UPDATE REVISION	6/26/2024

THIS DOCUMENT AND ANY ILLUSTRATIONS HEREON ARE PROVIDED AS STANDARD CONSTRUCTION DETAILS WITHIN HERRIMAN CITY. DEVIATION FROM THIS DOCUMENT REQUIRES APPROVAL OF HERRIMAN CITY. HERRIMAN CITY CANNOT BE HELD LIABLE FOR MISUSE OR CHANGES REGARDING THIS DOCUMENT.

HERRIMAN CITY

HERRIMAN CITY
ENGINEERING DEPARTMENT
SECONDARY WATER
SECONDARY WATER SERVICE

SW-01

6/26/2024 9:24 AM Q:\ENGINEERING\STANDARDS\CITY STANDARDS\WORKING EDITION\CAD\SECTION 6 STANDARD DRAWINGS\06 – SW\SW-01.DWG

***REFER TO PARTS LIST ON SW-PL FOR APPROVED PARTS MODELS.**

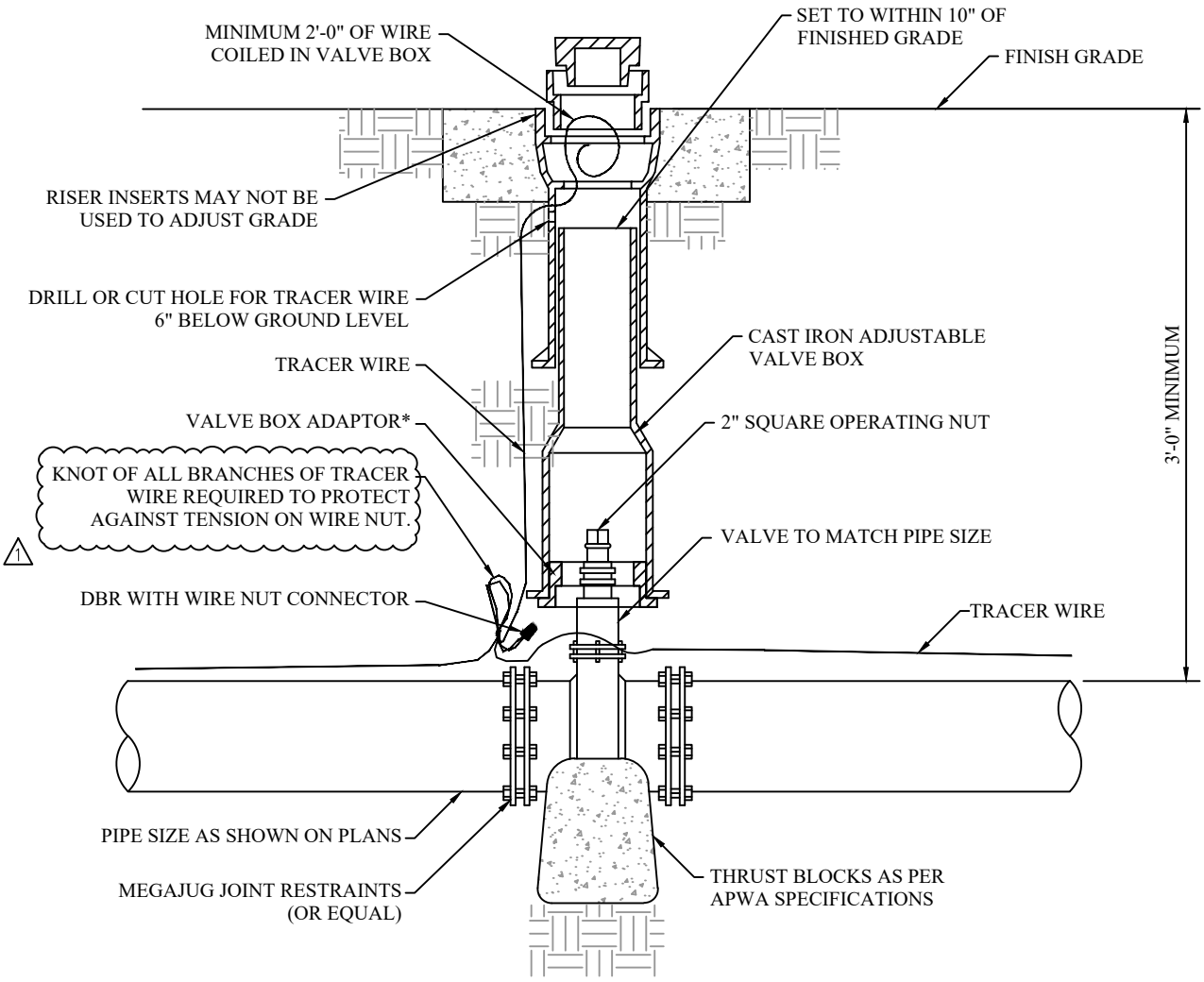

IRRIGATION

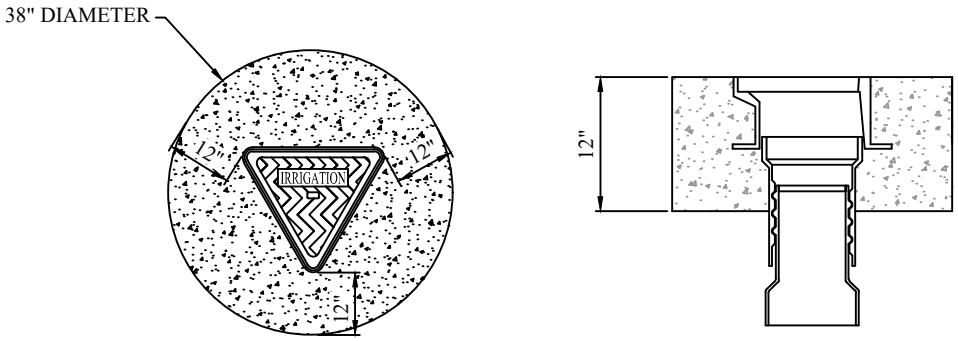

PLAN

PROFILE

NOTE:

1. VALVE BOX SHALL BE CLEAN, PLUMB AND PROPERLY ALIGNED ON THE VALVE.
2. MINIMUM OVERLAP OF 4" FOR STACKED LOWER BOXES.

NO.	REVISION DESCRIPTION	DATE
1	DRAWING NUMBER CHANGE & ADDED NOTE	6/5/2024

THIS DOCUMENT AND ANY ILLUSTRATIONS HEREON ARE PROVIDED AS STANDARD CONSTRUCTION DETAILS WITHIN HERRIMAN CITY. DEVIATION FROM THIS DOCUMENT REQUIRES APPROVAL OF HERRIMAN CITY. HERRIMAN CITY CANNOT BE HELD LIABLE FOR MISUSE OR CHANGES REGARDING THIS DOCUMENT.

HERRIMAN CITY
ENGINEERING DEPARTMENT
SECONDARY WATER
IRRIGATION VALVE

SW-08
1

6/5/2024 10:59 AM Q:\ENGINEERING\STANDARDS\CITY STANDARDS\WORKING EDITION\CAD\SECTION 6 STANDARD DRAWINGS\SW\SW-08.DWG

*REFER TO PARTS LIST ON SW-PL FOR APPROVED PARTS MODELS.

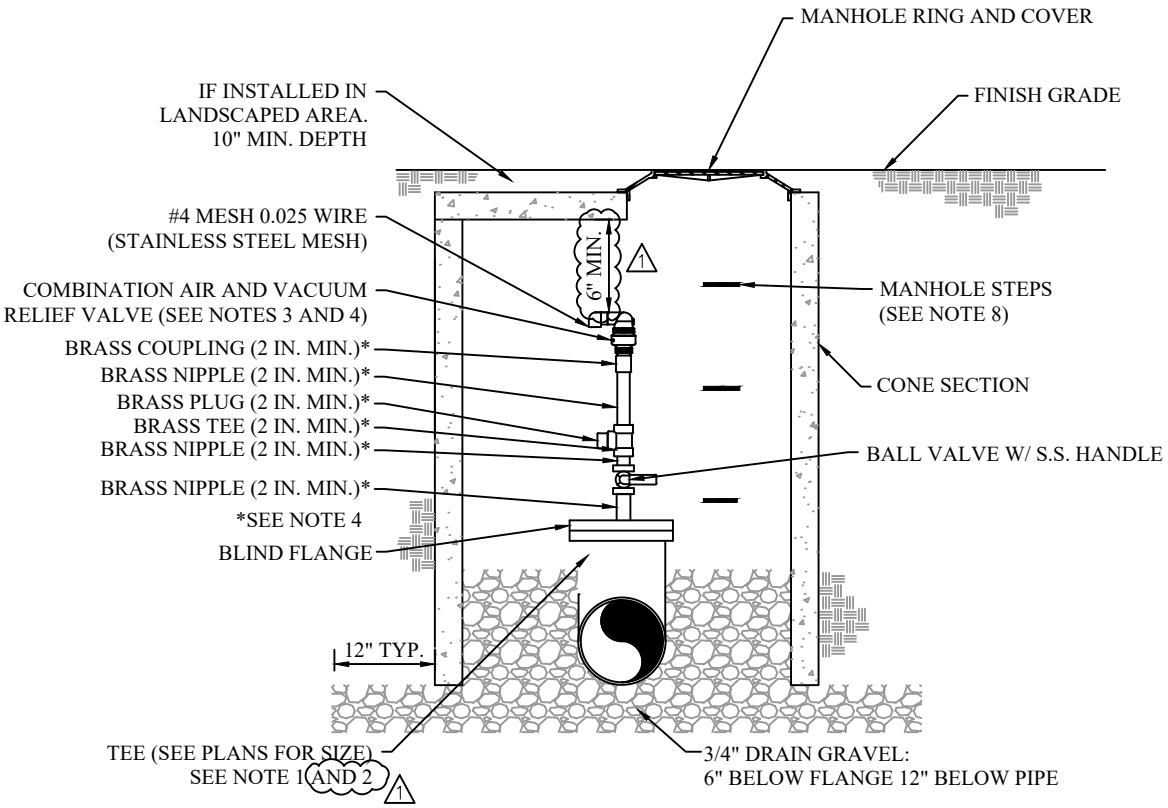

NOTES:

1. 2" AIR VACUUM RELIEF VALVES MAY USE TAP W/ SADDLE.
2. 4" AIR VACUUM RELEASE VALVES AND LARGER REQUIRE A TEE (MJxMJxFLG).
3. REFER TO PARTS LIST FOR APPROVED COMBINATION AIR VALVE.
4. AIR VALVE SHALL BE SIZED BY PROFESSIONAL ENGINEER OF RECORD. (2" MIN.)
5. AIR VACUUM VALVES OR AIR RELEASE VALVES ARE NOT ALLOWED WITHOUT APPROVAL FROM THE CITY ENGINEER.
6. TOP STEP MUST BE PLACED WITHIN 24" OF FINISHED GRADE.
7. BOTTOM STEP MUST BE WITHIN 12 IN. OF THE FLOOR

Q:\ENGINEERING\STANDARDS\CITY STANDARDS\WORKING EDITION\CAD\SECTION 6 STANDARD DRAWINGS\06 - SW\SW-13.DWG
6/26/2024 7:45 AM

NO.	REVISION DESCRIPTION	D-TE
1	DR-WING NUMBER CH-NGE	6/5/2024

THIS DOCUMENT -ND -NY ILLUSTR-TIONS HEREON -RE PROVIDED -S ST-ND-RD CONSTRUCTION DET-ILS WITHIN HERRIM-N CITY. DEVI-TION FROM THIS DOCUMENT REQUIRES -PPROV-L OF HERRIM-N CITY. HERRIM-N CITY C-NNOT BE HELD LI-BLE FOR MISUSE OR CH-NGES REG-RDING THIS DOCUMENT.

HERRIMAN CITY
ENGINEERING DEPARTMENT
SECONDARY WATER
SW AIR COMBINATION VALVE & ASSEMBLY

SW-13
1

*REFER TO PARTS LIST ON SW-PL FOR APPROVED PARTS MODELS.

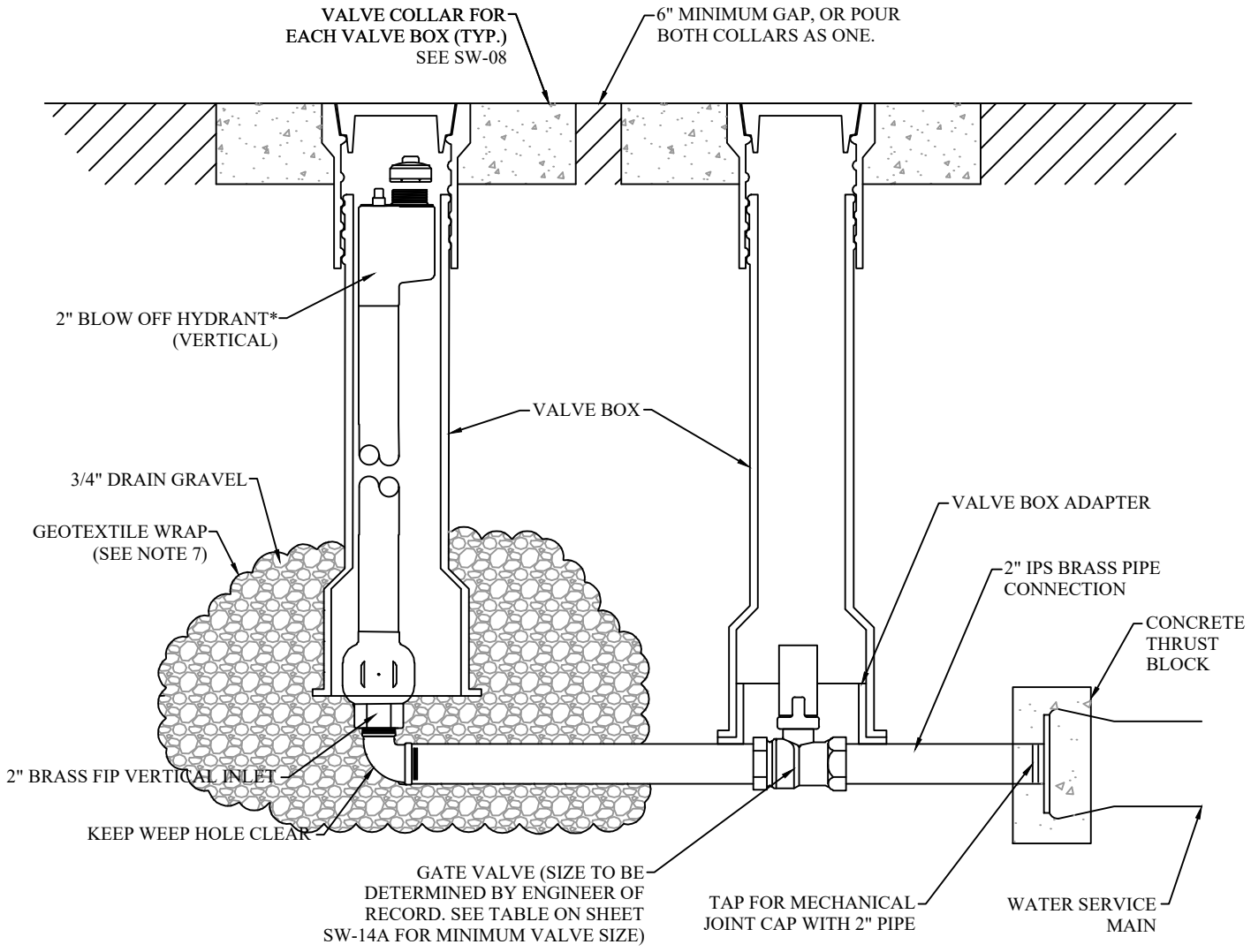

NOTES:

1. INSPECTION: PRIOR TO BACKFILLING AROUND THE ASSEMBLY, SECURE INSPECTION OF INSTALLATION BY ENGINEER.
2. BACKFILL: INSTALL AND COMPACT BACKFILL MATERIAL PER APWA SECTION 31 05 13 IN LIFTS NOT EXCEEDING 6" AFTER COMPACTION. COMPACT EACH LIFT TO A MINIMUM RELATIVE DENSITY OF 95%.
3. WORKING PARTS: ALL WORKING PARTS SHALL BE BRONZE TO BRONZE DESIGN, AND BE SERVICEABLE FROM ABOVE GROUND WITH NO DIGGING.
4. POST HYDRANTS SHALL BE NON- FREEZING, SELF DRAINING TYPE WITH A 36" BURY. HYDRANTS WILL BE FURNISHED WITH A 2" FIP INLET, A NON- TURNING OPERATING ROD, AND SHALL OPEN TO THE LEFT.
5. LOCKING: HYDRANTS SHALL BE LOCKABLE TO PREVENT UNAUTHORIZED USE. SEE PARTS LIST FOR APPROVED HYDRANT LOCKS.
6. MAKE SURE TO PLACE THREAD SEALANT ON ALL THREADED CONNECTIONS.
7. INSTALL A GEOTEXTILE WRAP AROUND THE 3/4" DRAIN GRAVEL TO PREVENT SILTING.

NO.	REVISION DESCRIPTION	DATE
1	SHEET -DDED INTO ST-ND-RDS	6/5/2024

THIS DOCUMENT -ND -NY ILLUSTR-TIONS HEREON -RE PROVIDED -S ST-ND-RD CONSTRUCTION DET-ILS WITHIN HERRIM-N CITY. DEVI-TION FROM THIS DOCUMENT REQUIRES -PPROV-L OF HERRIM-N CITY. HERRIM-N CITY C-NNOT BE HELD LI-BLE FOR MISUSE OR CH-NGES REG-RDING THIS DOCUMENT.

HERRIMAN CITY

HERRIMAN CITY
ENGINEERING DEPARTMENT
SECONDARY WATER
BLOW OFF HYDRANT

SW-14

6/26/2024 8:02 AM Q:\ENGINEERING\STANDARDS\CITY STANDARDS\WORKING EDITION\CAD\SECTION 6 STANDARD DRAWINGS\06 - SW\SW-14.DWG

***REFER TO PARTS LIST ON SW-PL FOR APPROVED PARTS MODELS.**

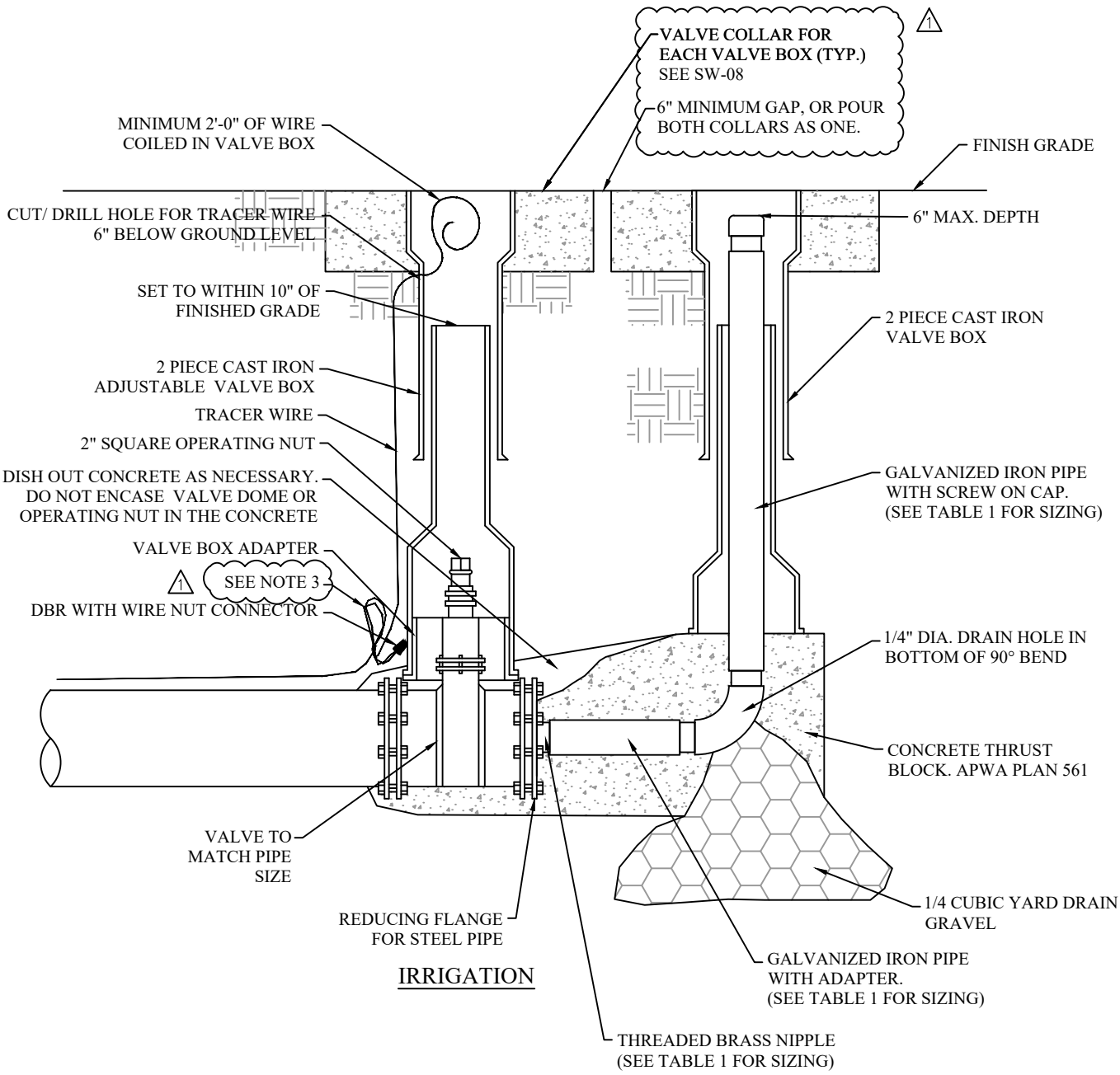

IRRIGATION

MINIMUM SIZE TABLE SEE NOTE 4	
DRAIN LINE SIZE	MAIN LINE SIZE
2"	8" OR SMALLER
4"	10" TO 16"
6"	LARGER THAN 16"

NOTE:

1 VALVE BOX SHALL BE CLEAN, PLUMB AND PROPERLY ALIGNED ON THE VALVE.

2 MINIMUM OVERLAP OF 4" FOR STACKED LOWER BOXES.

3 KNOT OF ALL BRANCHES OF TRACER REQUIRED TO PROTECT AGAINST TENSION ON WIRE NUT.

NO.	REVISION DESCRIPTION	DATE
1	ADDED NOTE AND DRAWING CHANGE	6/24/2024

THIS DOCUMENT AND ANY ILLUSTRATIONS HEREON ARE PROVIDED AS STANDARD CONSTRUCTION DETAILS WITHIN HERRIMAN CITY. DEVIATION FROM THIS DOCUMENT REQUIRES APPROVAL OF HERRIMAN CITY. HERRIMAN CITY CANNOT BE HELD LIABLE FOR MISUSE OR CHANGES REGARDING THIS DOCUMENT.

HERRIMAN CITY
ENGINEERING DEPARTMENT
SECONDARY WATER
TEMPORARY WASHOUT VALVE

SW-14A 1

6/26/2024 8:24 AM Q:\ENGINEERING\STANDARDS\CITY STANDARDS\WORKING EDITION\CAD\SECTION 6 STANDARD DRAWINGS\06 - SW\SW-14A.DWG

***REFER TO PARTS LIST ON SW-PL FOR APPROVED PARTS MODELS.**

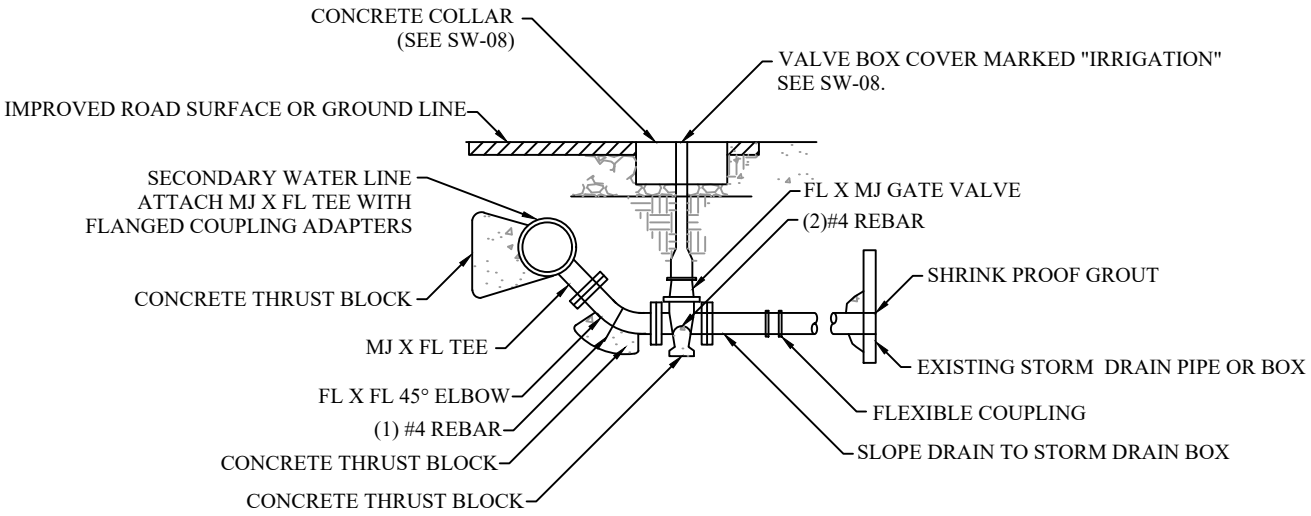

4" AND LARGER DRAIN VALVE DETAIL

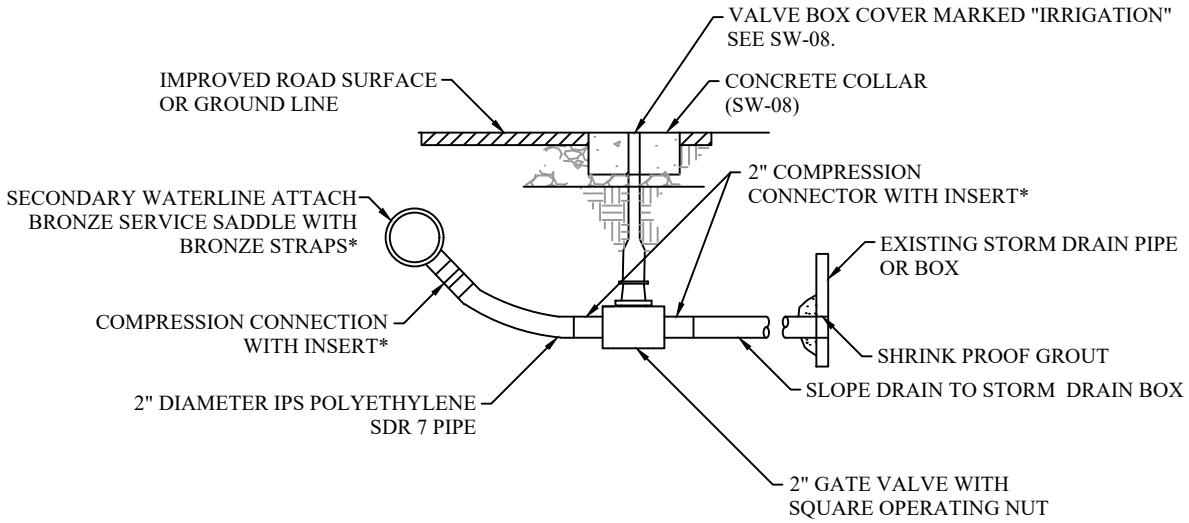

2" DRAIN VALVE DETAIL

NO.	REVISION DESCRIPTION	D-TE
1	DR-WING NUMBER CH-NGE	6/5/2024

THIS DOCUMENT -ND -NY ILLUSTR-TIONS HEREON -RE PROVIDED -S ST-ND-RD CONSTRUCTION DET-ILS WITHIN HERRIM-N CITY. DEVI-TION FROM THIS DOCUMENT REQUIRES -PPROV-L OF HERRIM-N CITY. HERRIM-N CITY C-NNOT BE HELD LI-BLE FOR MISUSE OR CH-NGES REG-RDING THIS DOCUMENT.

HERRIMAN CITY
ENGINEERING DEPARMENT
SECONDARY WATER
DRAIN DETAIL

SW-15
1

6/26/2024 8:44 AM Q:\ENGINEERING\STANDARDS\CITY STANDARDS\WORKING EDITION\CAD\SECTION 6 STANDARD DRAWINGS\06 - SW\SW-15.DWG

HERRIMAN CITY APPROVED SECONDARY WATER EQUIPMENT LIST

EQUIPMENT TYPE	Model
MJ Water Valve Connection Joint Restraints	EBAA Iron MEGALUG, Tyler TUFGrip, Star Fittings USA
Butterfly Valve	M&H Model 4500 “Linesal III” of approved equal
Gate Valves 2 Inches and Larger	Resilient Wedge Seat, Mueller, Clow or approved equal
Combination Air Valve	A.R.I. D-040 or approved equal
Swing Check Valves (2-inch to 24-inch)	Mueller Swing-Type
Globe Check Vavle (2-inch to 24-inch)	VAL-MATIC model #VM:1400A/1800-S
Control Valves	CLA-VAL
Valve Box	Tyler 564A Cast IronValve Box Adaptor
Valve Box Adaptor	Adaptor Inc. Model VBA-II
1" Brass Service Saddle	Ford FB-202B
Bronze Service Saddle w/Bronze Straps	Ford FB-202B w/ inserts
Corporation Stops (up to 1-inch service line)	Type A: Ford-FB 1101-4-Q-NL IPS Saddle Type A: Mueller B-25029N if direct tapped Type B: Ford-FB 1001-4-Q-NL CC threaded Type B: Mueller B-25009N
1" Corporation Stop Coupling Adapter	Ford-C86-66 Mueller B-25005
2" Blow Off Hydrant	Mainguard No. 78 or Approved Equal Truflow #TF500
Meter (1" to 2" meters)	Neptune model
1" Yoke Meter Box	Ford # LYLBB111-444-95504-017-NL A.Y. McDonald # 77k409BBGG 443X206
1 1/2" Yoke Meter Box	Ford # FPMB-7-T-95015-030-NL
2" Yoke Meter Box	Ford # FPMB-7-T-95015-024-NL
Compression fittings with insert	
1"	Ford C86-44QNL, or approved equal
1 1/2"	Ford C86-66NL, or approved equal
2"	Ford C86-77NL, or approved equal
2" connector with insert	Mueller 110 Compression w/ insert Ford C-86-77 w/ insert connector

1

Q:\ENGINEERING\STANDARDS\CITY STANDARDS\WORKING EDITION\CAD\SECTION 6 STANDARD DRAWINGS\06 – SW\SW-PL.DWG
6/26/2024 9:30 AM

NO.	REVISION DESCRIPTION	D-TE
1	2024 ST-ND-RDS UPD-TE REVISION	6/5/2024

THIS DOCUMENT -ND -NY ILLUSTR-TIONS HEREON -RE PROVIDED -S ST-ND-RD CONSTRUCTION DET-ILS WITHIN HERRIM-N CITY. DEVI-TION FROM THIS DOCUMENT REQUIRES -PPROV-L OF HERRIM-N CITY. HERRIM-N CITY C-NNOT BE HELD LI-BLE FOR MISUSE OR CH-NGES REG-RDING THIS DOCUMENT.

HERRIMAN CITY

HERRIMAN CITY
ENGINEERING DEPARTMENT
CULINARY WATER
SECONDARY WATER EQUIPMENT LIST

SW-PL1

HERRIMAN CITY APPROVED SECONDARY WATER EQUIPMENT LIST

EQUIPMENT TYPE	Model
Underground Packaged Pressure Reducing Station	Per Specification 33 12 18
Pipe Supports	Grinnel Figure 264 adjustable pipe saddle support with Figure 63 Type T stanchion and base plate or approved equal

6/26/2024 9:30 AM Q:\ENGINEERING\STANDARDS\CITY STANDARDS\WORKING EDITION\CAD\SECTION 6 STANDARD DRAWINGS\06 – SW\SW-PL.DWG

NO.	REVISION DESCRIPTION	D-TE

THIS DOCUMENT -ND -NY ILLUSTR-TIONS HEREON -RE PROVIDED -S ST-ND-RD CONSTRUCTION DET-ILS WITHIN HERRIM-N CITY. DEVI-TION FROM THIS DOCUMENT REQUIRES -PPROV-L OF HERRIM-N CITY. HERRIM-N CITY C-NNOT BE HELD LI-BLE FOR MISUSE OR CH-NGES REG-RDING THIS DOCUMENT.

HERRIMAN CITY

HERRIMAN CITY
ENGINEERING DEPARTMENT
CULINARY WATER
SECONDARY WATER EQUIPMENT LIST (pg 2 of 2)

SW-PL2

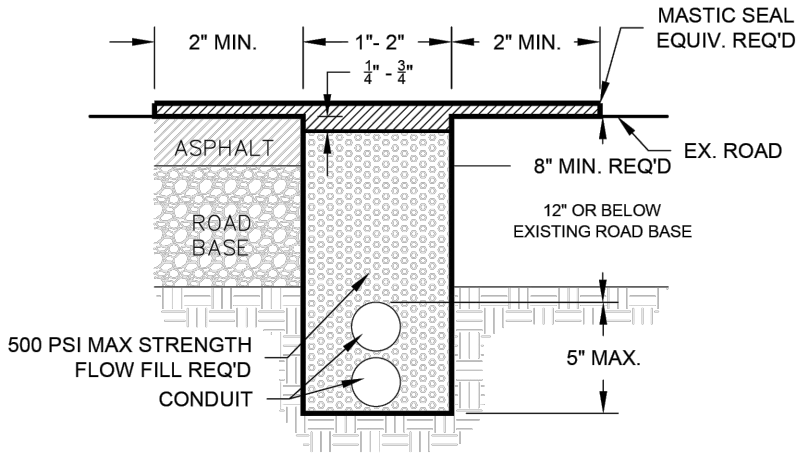

NARROW TRENCH EXCAVATION
IN ASPHALT

A (1 TO 2 INCHES WIDE, 12 INCHES COVER, MASTIC SEAL OVERBAND)

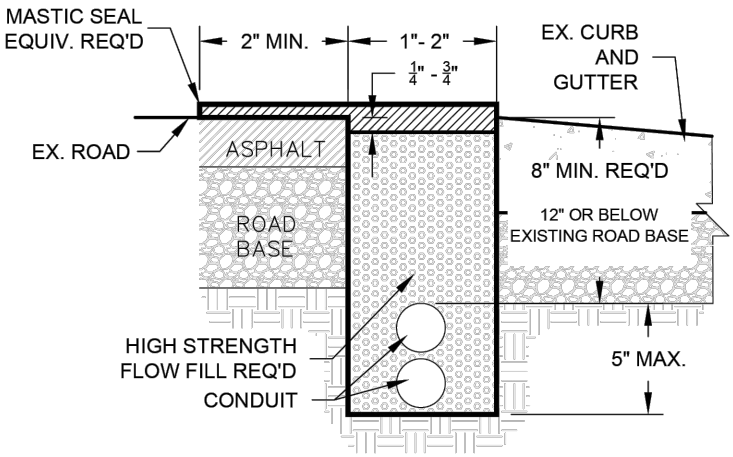

NARROW TRENCH EXCAVATION
ADJACENT TO CURB

B (1 TO 2 INCHES WIDE, 12 INCHES COVER, MASTIC SEAL OVERBAND)

NO.	REVISION DESCRIPTION	DATE
1	NEW DRAWING ADDED TO STANDARDS	6/5/2024

THIS DOCUMENT AND ANY ILLUSTRATIONS HEREON ARE PROVIDED AS STANDARD CONSTRUCTION DETAILS WITHIN HERRIMAN CITY. DEVIATION FROM THIS DOCUMENT REQUIRES APPROVAL OF HERRIMAN CITY. HERRIMAN CITY CANNOT BE HELD LIABLE FOR MISUSE OR CHANGES REGARDING THIS DOCUMENT.

HERRIMAN CITY

HERRIMAN CITY
ENGINEERING DEPARTMENT
COMMUNICATIONS
NARROW TRENCH DETAIL

CM-01

6/25/2024 3:33 PM Q:\ENGINEERING\STANDARDS\CITY STANDARDS\WORKING EDITION\CAD\SECTION 6 STANDARD DRAWINGS\07 - CM\CM-01 NARROW TRENCH DETAIL.DWG

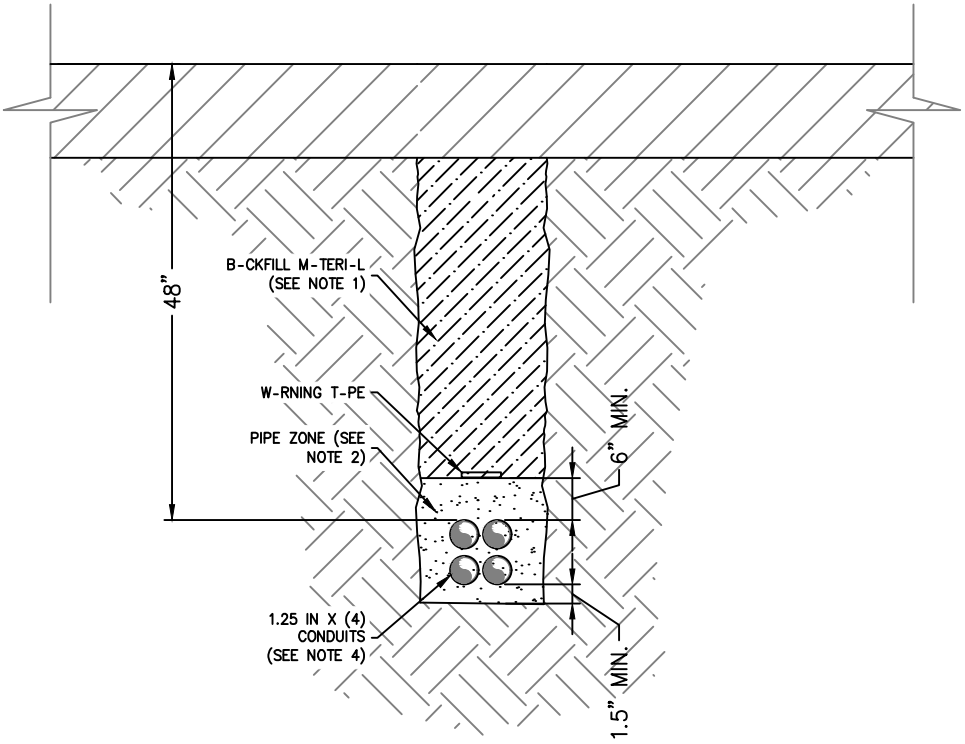

NOTES:

1. B-CKFILL M-TERI-L: UNDER EXISTING, P-VED OR CONCRETE SURF-CES, USE FLOW-BLE FILL PER -PW- SECTION 31 05 15. FOR NEW P-VEMENT OR CONCRETE, USE GR-NUL-R B-CKFILL BORROW PER -PW- 31 05 13, INST-LLED PER -PW- 33 05 20. M-Y USE N-TIVE M-TERI-L FOR L-NDSC-PE SURF-CES.

2. PIPE ZONE: INST-LL S-ND PER -PW- 31 05 13.

3. INST-LL DETECT-BLE PULL T-PE IN -LL EMPTY CONDUITS.

4. CONDUIT SH-LL BE:
   -) SCHEDULE 40 PVC R-TED -T 194 DEGREES F -S SPECIFIED IN NEM- TC-2, NEM- TC-3, -STM D 2241, OR
   B) HDPE SDR11 R-TED COMLYING WITH -STM F 2160. SMOOTH OUTER -ND INTERIOR W-LL. FITTINGS -BD COUPLERS R-TED FOR MINIMUM 130 PSI.
   C) MECHNIC-L TYPE COUPLERS WHEN JOINING HDPE -ND PVC CONDUITS. COLORS SH-LL INCLUDE 1 BLUE, 1 OR-NGE, 1 GREEN, -ND 1 BROWN.

5. JOINT TRENCHING -LLOWED WITH STREETLIGHT CONDUITS. MINIMUM 18 IN CLE-R-NCE BETWEEN 1D CONDUIT -ND STREETLIGHT CONDUIT.

6. JUNCTION BOXES SH-LL CONFORM TO UDOT ST-ND-RDS -ND SPECIFIC-TIONS.

NO.	REVISION DESCRIPTION	D-TE
⚠	-DDED SHEET 2024 ST-ND-RDS UPD-TE	11/01/2022

THIS DOCUMENT -ND -NY ILLUSTR-TIONS HEREON -RE PROVIDED -S ST-ND-RD CONSTRUCTION DET-ILS WITHIN HERRIM-N CITY. DEVI-TION FROM THIS DOCUMENT REQUIRES -PPROV-L OF HERRIM-N CITY. HERRIM-N CITY C-NNOT BE HELD LI-BLE FOR MISUSE OR CH-NGES REG-RDING THIS DOCUMENT.

HERRIMAN CITY

HERRIMAN CITY
ENGINEERING DEPARTMENT
COMMUNICATIONS
1D DUCT BANK

CM-02

6/26/2024 10:28 AM Q:\ENGINEERING\STANDARDS\CITY STANDARDS\WORKING EDITION\CAD\SECTION 6 STANDARD DRAWINGS\07 - CM\CM-02 1D DUCT BANK.DWG

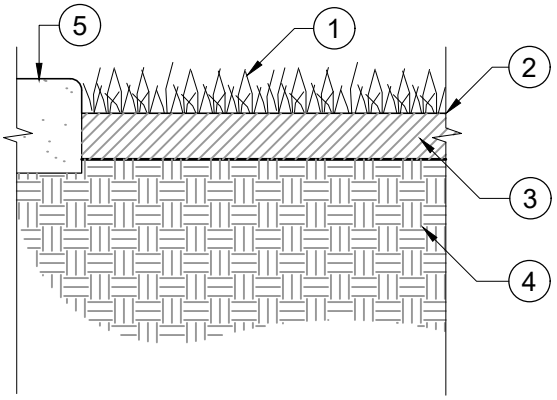

1. TURF GRASS – SOD
2. FINISHED GRADE FOR LAWN AREAS: 1–1/2" BELOW TOP OF HARDSCAPE FOR SOD
3. 4" DEPTH TOPSOIL – SEE PLANTING SPECIFICATIONS
4. UNDISTURBED SUBGRADE OR COMPACTED TO 95% MDD PER ASTM D–1557
5. HARDSCAPE

1/7/2021 4:58 PM \\SLCFILES\PUBLIC\PROJECTS\JUB\HERRIMAN\83-17-040 CITY STANDARDS MANUAL UPDATE 2017\TEXT\SUBMITTALS\SECTION 6 (COMPLETE)\2020-11-05\LP\LP-DETAILS.DWG

NO.	REVISION DESCRIPTION	D-TE

THIS DOCUMENT -ND -NY ILLUSTR-TIONS HEREON -RE PROVIDED -S ST-ND-RD CONSTRUCTION DET-ILS WITHIN HERRIM-N CITY. DEVI-TION FROM THIS DOCUMENT REQUIRES -PPROV-L OF HERRIM-N CITY. HERRIM-N CITY C-NNOT BE HELD LI-BLE FOR MISUSE OR CH-NGES REG-RDING THIS DOCUMENT.

HERRIMAN CITY

HERRIMAN CITY
ENGINEERING DEPARTMENT
LANDSCAPE
TURF GRASS; SOD/SEED

LP-01

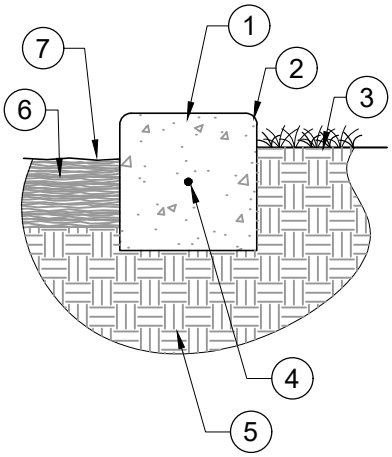

NOTE: PROVIDE CONSTRUCTION OR CONTROL JOINTS AT 5' O.C. MAX. AND EXPANSION JOINTS WHERE MOWSTRIP ABUTS ANY MASONRY TYPE IMPROVEMENT.

1. 6"x6" CONCRETE MOPWSTRIP (MIN. 2000 PSI AT 28 DAYS)
2. $\frac{1}{2}$" RADIUS TROWLED EDGES (TYP.)
3. FINISH GRADE FOR LAWN AREAS: 1–1/2" BELOW TOP OF CONCRETE FOR SOD
4. #3 REBAR CONT. LAP 12" MIN. AT SPLICES.
5. UNDISTURBED SUBGRADE OR COMPACTED TO 90% MDD PER ASTM D–1557
6. 3" LAYER MULCH IN PLANTER BEDS (SEE PLANT SCHEDULE FOR MULCH TYPE)
7. FINISH GRADE AT 2" BELOW TOP OF CONCRETE FOR PLANTING BED AREAS

NO.	REVISION DESCRIPTION	D-TE

THIS DOCUMENT -ND -NY ILLUSTR-TIONS HEREON -RE PROVIDED -S ST-ND-RD CONSTRUCTION DET-ILS WITHIN HERRIM-N CITY. DEVI-TION FROM THIS DOCUMENT REQUIRES -PPROV-L OF HERRIM-N CITY. HERRIM-N CITY C-NNOT BE HELD LI-BLE FOR MISUSE OR CH-NGES REG-RDING THIS DOCUMENT.

HERRIMAN CITY

HERRIMAN CITY
ENGINEERING DEPARTMENT
LANDSCAPE
6" CONCRETE MOWSTRIP

LP-02

1/7/2021 4:58 PM \\SLCFILES\PUBLIC\PROJECTS\JUB\HERRIMAN\83-17-040 CITY STANDARDS MANUAL UPDATE 2017\TEXT\SUBMITTALS\SECTION 6 (COMPLETE)\2020-11-05\LP\LP-DETAILS.DWG

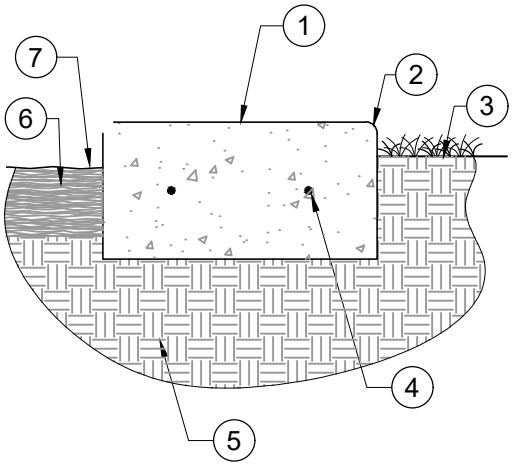

NOTE: PROVIDE CONSTRUCTION OR CONTROL JOINTS AT 5' O.C. MAX. AND EXPANSION JOINTS WHERE MOWSTRIP ABUTS ANY MASONRY TYPE IMPROVEMENT.

1. 12"x6" CONCRETE MOPWSTRIP (MIN. 2000 PSI AT 28 DAYS)
2. $\frac{1}{2}$" RADIUS TROWLED EDGES (TYP.)
3. FINISH GRADE FOR LAWN AREAS: 1–1/2" BELOW TOP OF CONCRETE FOR SOD
4. #3 REBAR CONT. LAP 12" AT SPLICES.
5. UNDISTURBED SUBGRADE OR COMPACTED TO 90% MDD PER ASTM D–1557
6. 3" LAYER MULCH IN PLANTER BEDS (SEE PLANT SCHEDULE FOR MULCH TYPE)
7. FINISH GRADE AT 2" BELOW TOP OF CONCRETE FOR PLANTING BED AREAS

1/7/2021 4:59 PM \\SLCFILES\PUBLIC\PROJECTS\JUB\HERRIMAN\83-17-040 CITY STANDARDS MANUAL UPDATE 2017\TEXT\SUBMITTALS\SECTION 6 (COMPLETE)\2020-11-05\LP\LP-DETAILS.DWG

NO.	REVISION DESCRIPTION	D-TE

THIS DOCUMENT -ND -NY ILLUSTR-TIONS HEREON -RE PROVIDED -S ST-ND-RD CONSTRUCTION DET-ILS WITHIN HERRIM-N CITY. DEVI-TION FROM THIS DOCUMENT REQUIRES -PPROV-L OF HERRIM-N CITY. HERRIM-N CITY C-NNOT BE HELD LI-BLE FOR MISUSE OR CH-NGES REG-RDING THIS DOCUMENT.

HERRIMAN CITY

HERRIMAN CITY
ENGINEERING DEPARTMENT
LANDSCAPE
12" CONCRETE MOWSTRIP

LP-03

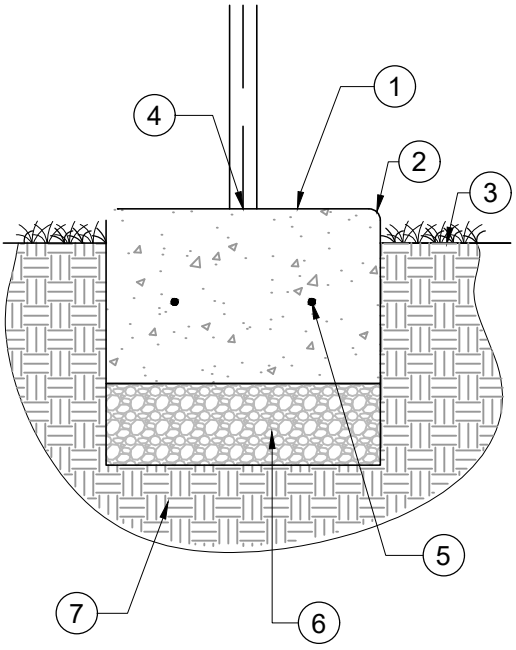

NOTE:CONTRACTION JOINTS EVERY 10' MAXIMUM AND EXPANSION JOINTS EVERY 50' MAXIMUM

1. 18"x8" CONCRETE MOPWSTRIP (MIN. 2000 PSI AT 28 DAYS)
2. $\frac{3}{4}$" RADIUS TROWLED EDGES (TYP.)
3. FINISH GRADE: 1–1/2" BELOW TOP OF CONCRETE FOR SOIL/SOD
4. FENCE AT CENTERLINE
5. #3 REBAR CONT. LAP 12" AT SPLICES.
6. 4" COMPACTED ROADBASE 95% MDD PER ASTM D–1557
7. UNDISTURBED SUBGRADE OR COMPACTED TO 90% MDD PER ASTM D–1557

NO.	REVISION DESCRIPTION	D-TE

THIS DOCUMENT -ND -NY ILLUSTR-TIONS HEREON -RE PROVIDED -S ST-ND-RD CONSTRUCTION DET-ILS WITHIN HERRIM-N CITY. DEVI-TION FROM THIS DOCUMENT REQUIRES -PPROV-L OF HERRIM-N CITY. HERRIM-N CITY C-NNOT BE HELD LI-BLE FOR MISUSE OR CH-NGES REG-RDING THIS DOCUMENT.

HERRIMAN CITY

HERRIMAN CITY
ENGINEERING DEPARTMENT
LANDSCAPE
18" MOWSTRIP

LP-04

1/7/2021 4:59 PM \\SLCFILES\PUBLIC\PROJECTS\JUB\HERRIMAN\83-17-040 CITY STANDARDS MANUAL UPDATE 2017\TEXT\SUBMITTALS\SECTION 6 (COMPLETE)\2020-11-05\LP\LP-DETAILS.DWG

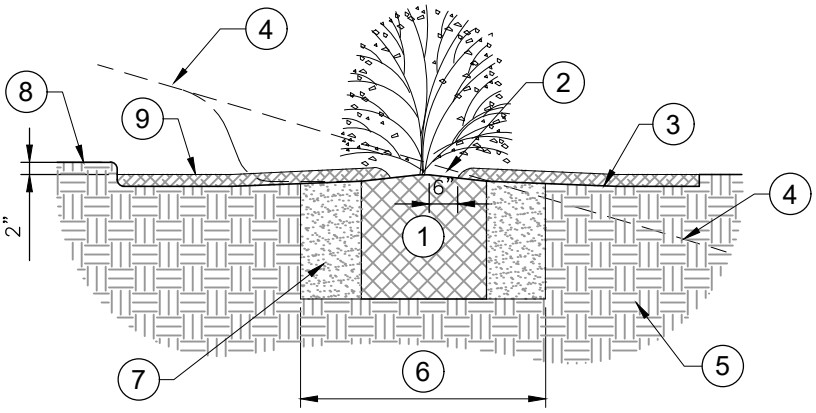

1. ROOT BALL
2. CROWN – AT FINISHED GRADE
3. FINISHED GRADE
4. FINISHED GRADE AT SLOPE (WHERE OCCURS)
5. UNDISTURBED SOIL
6. 2X ROOTBALL DIA. MIN.
7. BACKFILL MIX – SEE PLANTING NOTES
8. TOP OF PAVING (WHERE APPLICABLE
9. 3" LAYER OF MULCH (SEE PLANT SCHEDULE FOR MULCH TYPE)

\\SLCFILES\PUBLIC\PROJECTS\JUB\HERRIMAN\83-17-040 CITY STANDARDS MANUAL UPDATE 2017\TEXT\SUBMITTALS\SECTION 6 (COMPLETE)\2020-11-05\LP\LP-DETAILS.DWG
1/7/2021 4:59 PM

NO.	REVISION DESCRIPTION	D-TE

THIS DOCUMENT -ND -NY ILLUSTR-TIONS HEREON -RE PROVIDED -S ST-ND-RD CONSTRUCTION DET-ILS WITHIN HERRIM-N CITY. DEVI-TION FROM THIS DOCUMENT REQUIRES -PPROV-L OF HERRIM-N CITY. HERRIM-N CITY C-NNOT BE HELD LI-BLE FOR MISUSE OR CH-NGES REG-RDING THIS DOCUMENT.

HERRIMAN CITY

HERRIMAN CITY
ENGINEERING DEPARTMENT
LANDSCAPE
PERENNIAL PLANTING

LP-05

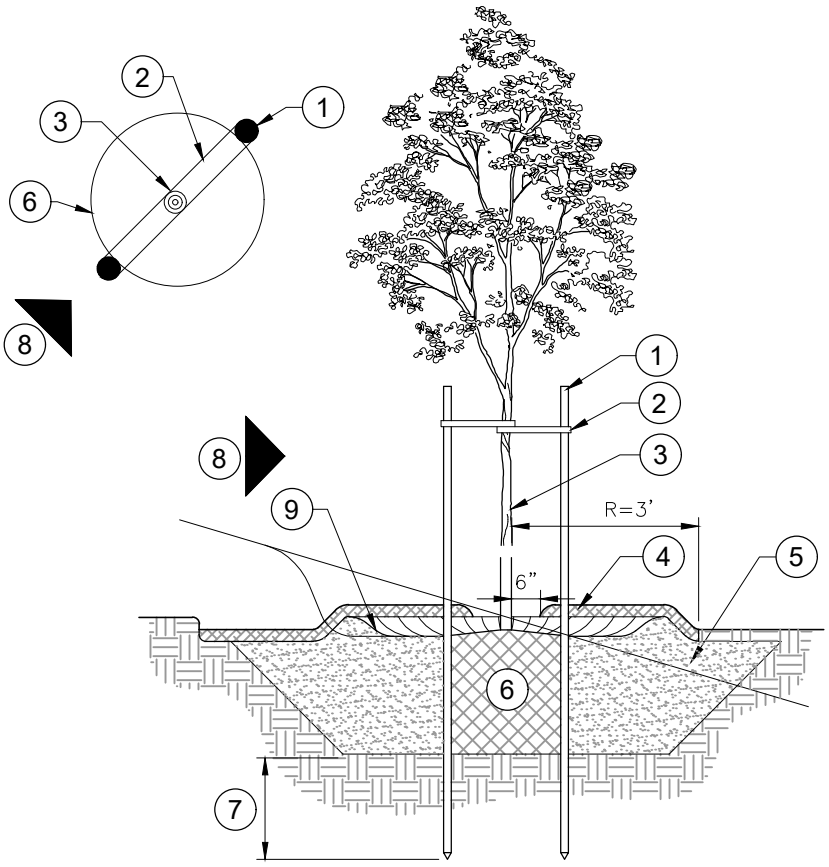

1. 2" DIA. OR 2"X2" SQ. x 10' STRAIGHT WOODEN STAKE (2 REQUIRED)
2. V.I.T. CINCH–TIE VINYL TREE TIE (2 PER STAKE, LENGTH AS REQUIRED). SECURE TO STAKE W/ GALV. NAIL, 1 PER TIE.
3. TREE TRUNK
4. 3" LAYER MULCH AROUND EACH TREE (3' RADIUS CIRCLE WHEN IN TURF)
5. SEE TREE/SHRUB PLANTING DETAIL
6. ROOT BALL
7. 24" MIN.
8. PREVAILING WIND DIRECTION
9. WATERING BASIN – SEE TREE/SHRUB PLANTING DETAIL

NOTE: STAKES SHALL BE REMOVED AFTER 1 FULL GROWING SEASON.

THIS DOCUMENT -ND -NY ILLUSTR-TIONS HEREON -RE PROVIDED -S ST-ND-RD CONSTRUCTION DET-ILS WITHIN HERRIM-N CITY. DEVI-TION FROM THIS DOCUMENT REQUIRES -PPROV-L OF HERRIM-N CITY. HERRIM-N CITY C-NNOT BE HELD LI-BLE FOR MISUSE OR CH-NGES REG-RDING THIS DOCUMENT.

NO.	REVISION DESCRIPTION	DATE

HERRIMAN CITY

HERRIMAN CITY
ENGINEERING DEPARTMENT
LANDSCAPE
DECIDUOUS TREE STAKING W/ WATERING BASIN

LP-06

1/7/2021 4:59 PM \\SLCFILES\PUBLIC\PROJECTS\JUB\HERRIMAN\83-17-040 CITY STANDARDS MANUAL UPDATE 2017\TEXT\SUBMITTALS\SECTION 6 (COMPLETE)\2020-11-05\LP\LP-DETAILS.DWG

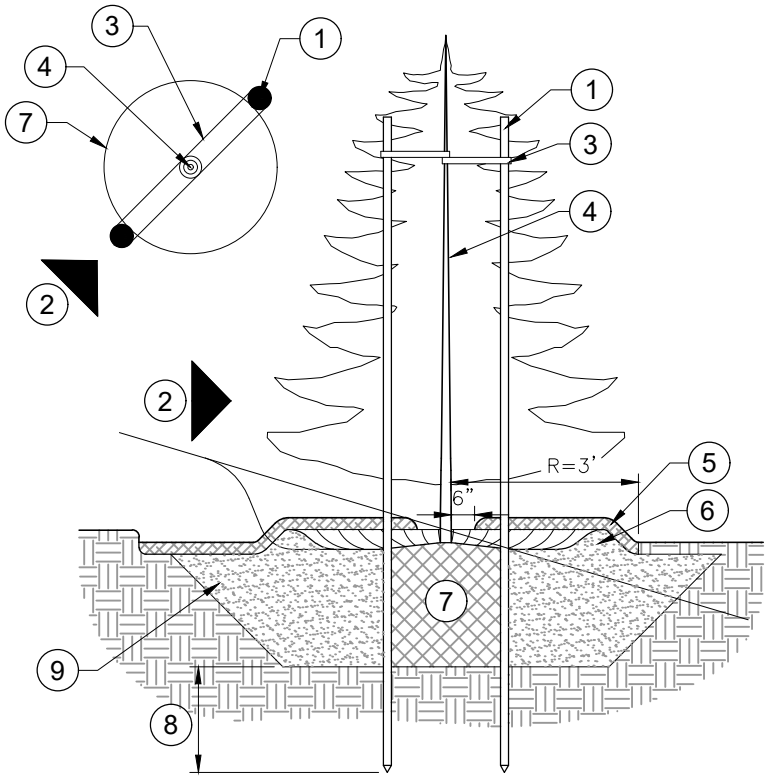

NOTE: STAKES SHALL BE REMOVED AFTER 1 FULL GROWING SEASON.

1. 2" DIA. OR 2"X2" SQ. X 10' STRAIGHT WOODEN STAKE (2 REQUIRED)
2. PREVAILING WIND DIRECTION
3. V.I.T. CINCH–TIE VINYL TREE TIE (1 PER STAKE, LENGTH AS REQUIRED). SECURE TO STAKE W/ GALV. NAIL, 1 PER TIE.
4. TREE TRUNK
5. 3" LAYER MULCH AROUND EACH TREE (3' RADIUS CIRCLE WHEN IN TURF)
6. WATERING BASIN – SEE TREE/SHRUB PLANTING DETAIL
7. ROOTBALL
8. 24" MIN.
9. SEE TREE/SHRUB PLANTING DETAIL

1/7/2021 4:59 PM \\SLCFILES\PUBLIC\PROJECTS\JUB\HERRIMAN\83-17-040 CITY STANDARDS MANUAL UPDATE 2017\TEXT\SUBMITTALS\SECTION 6 (COMPLETE)\2020-11-05\LP\LP-DETAILS.DWG

NO.	REVISION DESCRIPTION	D-TE

THIS DOCUMENT -ND -NY ILLUSTR-TIONS HEREON -RE PROVIDED -S ST-ND-RD CONSTRUCTION DET-ILS WITHIN HERRIM-N CITY. DEVI-TION FROM THIS DOCUMENT REQUIRES -PPROV-L OF HERRIM-N CITY. HERRIM-N CITY C-NNOT BE HELD LI-BLE FOR MISUSE OR CH-NGES REG-RDING THIS DOCUMENT.

HERRIMAN CITY

HERRIMAN CITY
ENGINEERING DEPARTMENT
LANDSCAPE
EVERGREEN TREE STAKING W/ WATERING BASIN

LP-07

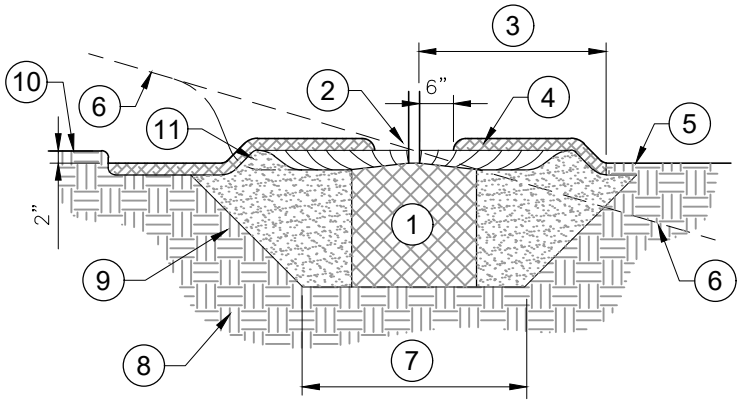

1. ROOTBALL
2. CROWN – APPROXIMATELY 1" ABOVE FINISH GRADE
3. 3' RADIUS CIRCLE OF MULCH WHEN TREE IS LOCATED IN TURF
4. 3" LAYER OF MULCH
5. FINISHED GRADE
6. FINISHED GRADE AT SLOPE (WHERE SLOPE OCCURS)
7. 2X ROOTBALL DIA. MIN. W/ 45 DEGREE SIDES
8. UNDISTURBED SOIL
9. BACKFILL MIX (SEE PLANTING NOTES)
10. TOP OF PAVING (WHERE APPLICABLE)
11. 3" HIGH WATERING BASIN

NOTES:

1. PRUNE CIRCLING ROOTS, PROTRUDING ROOT STUBS, AND FIBROUS MATTED ROOTS FLUSH WITH THE ROOT BALL. HANDLE ROOT BALL WITH CARE. MINIMIZE CRUMBLING, CRACKING, AND SPLITTING.
2. AFTER PLACING THE TREE IN THE HOLE, REMOVE WIRE AND BURLAP. LEAVE NO TWINE OR BURLAP ON OR NEAR THE SURFACE OF THE BALL OR AROUND THE TRUNK. CUT VERTICAL SLITS IN BURLAP THAT REMAINS. DO NOT FOLD BURLAP INTO THE HOLE.
3. SLIDE ROOT BALLS OUR OF CONTAINERS. DO NOT PULL ON THE TRUNK. IF THE ROOT BALL IS TOO LARGE, CUT THE CONTAINER OFF AFTER THE TREE IS PLACED IN THE PLANTING HOLE.
4. USE SOIL REMOVED FROM THE HOLE AS BACKFILL. IF SOIL IS BASE COURSE MATERIAL, MIX WITH 1/3 ORGANIC MULCH. MIX THOROUGHLY.
5. COMPACT BACKFILL IN 6" LAYERS. WATER. ALLOW WATER TO SOAK DEEPLY INTO THE SOIL. MAKE SURE ROOT BALL GETS THOROUGHLY WET.
6. FERTILIZER SHALL BE PROVIDED IN EACH BASIN AT THE TIME OF INSTALLATION. FERTILIZER APPLICATION SHALL BE PER MANUFACTURER'S RECOMMENDATIONS.

1/7/2021 4:59 PM \\SLCFILES\PUBLIC\PROJECTS\JUB\HERRIMAN\83-17-040 CITY STANDARDS MANUAL UPDATE 2017\TEXT\SUBMITTALS\SECTION 6 (COMPLETE)\2020-11-05\LP\LP-DETAILS.DWG

NO.	REVISION DESCRIPTION	D-TE

THIS DOCUMENT -ND -NY ILLUSTR-TIONS HEREON -RE PROVIDED -S ST-ND-RD CONSTRUCTION DET-ILS WITHIN HERRIM-N CITY. DEVI-TION FROM THIS DOCUMENT REQUIRES -PPROV-L OF HERRIM-N CITY. HERRIM-N CITY C-NNOT BE HELD LI-BLE FOR MISUSE OR CH-NGES REG-RDING THIS DOCUMENT.

HERRIMAN CITY

HERRIMAN CITY
ENGINEERING DEPARTMENT
LANDSCAPE
TREE/SHRUB PLANTING W/ WATERING BASIN

LP-08

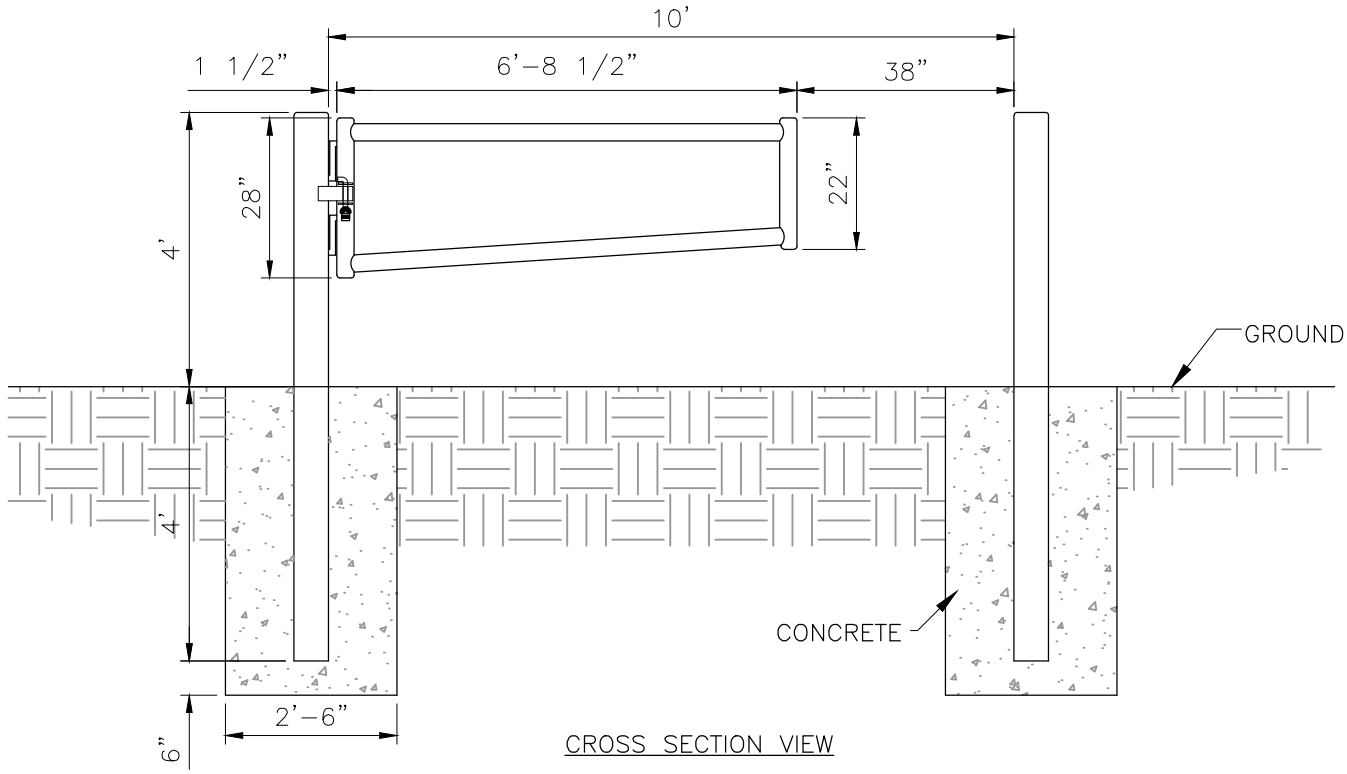

CROSS SECTION VIEW

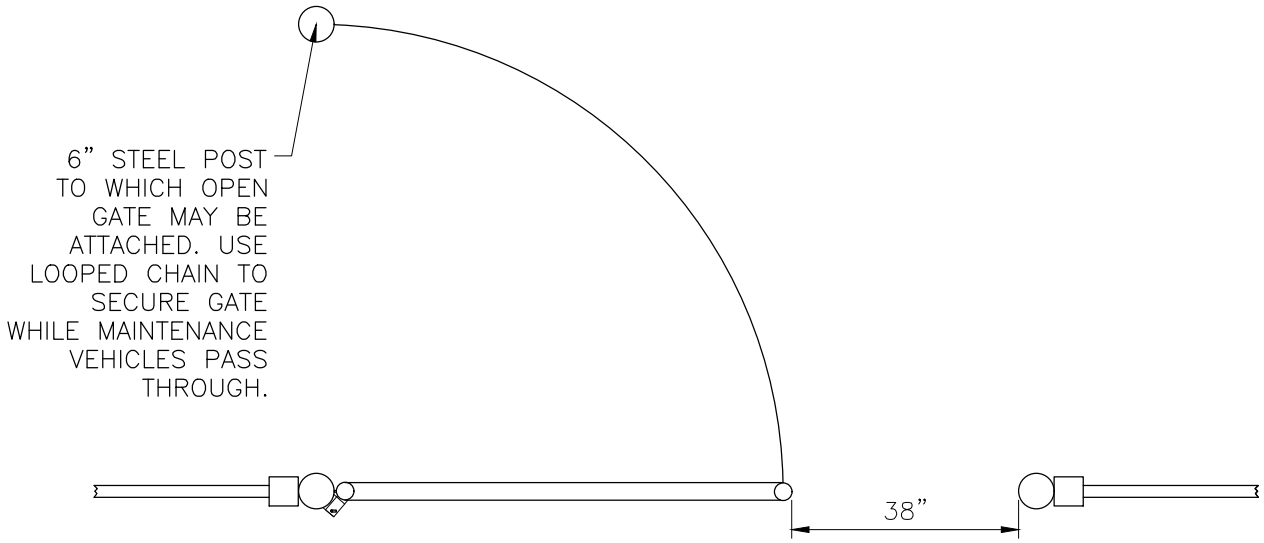

PLAN VIEW

NOTES:

1. GATE MUST SWING INTO HERRIMAN CITY PROPERTY.
2. PRIME AND PAINT GATE ASSEMBLY GLOSSY BLACK.
3. THE PIPE FOR THE POST IS 6" SCHEDULE 40 STEEL PIPE.
4. THE GATE SHALL BE CONSTRUCTED OF 3" SCHEDULE 40 STEEL PIPE.
5. CUT AND WELD PIECES TO FIT. GRIND TO SMOOTH FINISH.
6. CONCRETE SHALL BE MIN. 3000 PSI AT 28 DAYS.

NO.	REVISION DESCRIPTION	D-TE

THIS DOCUMENT -ND -NY ILLUSTR-TIONS HEREON -RE PROVIDED -S ST-ND-RD CONSTRUCTION DET-ILS WITHIN HERRIM-N CITY. DEVI-TION FROM THIS DOCUMENT REQUIRES -PPROV-L OF HERRIM-N CITY. HERRIM-N CITY C-NNOT BE HELD LI-BLE FOR MISUSE OR CH-NGES REG-RDING THIS DOCUMENT.

HERRIMAN CITY

HERRIMAN CITY
ENGINEERING DEPARTMENT
LANDSCAPE
GATE ASSEMBLY FOR TRAIL HEAD (OPTION A)

LP-09

1/7/2021 4:59 PM \\SLCFILES\PUBLIC\PROJECTS\JUB\HERRIMAN\83-17-040 CITY STANDARDS MANUAL UPDATE 2017\TEXT\SUBMITTALS\SECTION 6 (COMPLETE)\2020-11-05\LP\LP-DETAILS.DWG

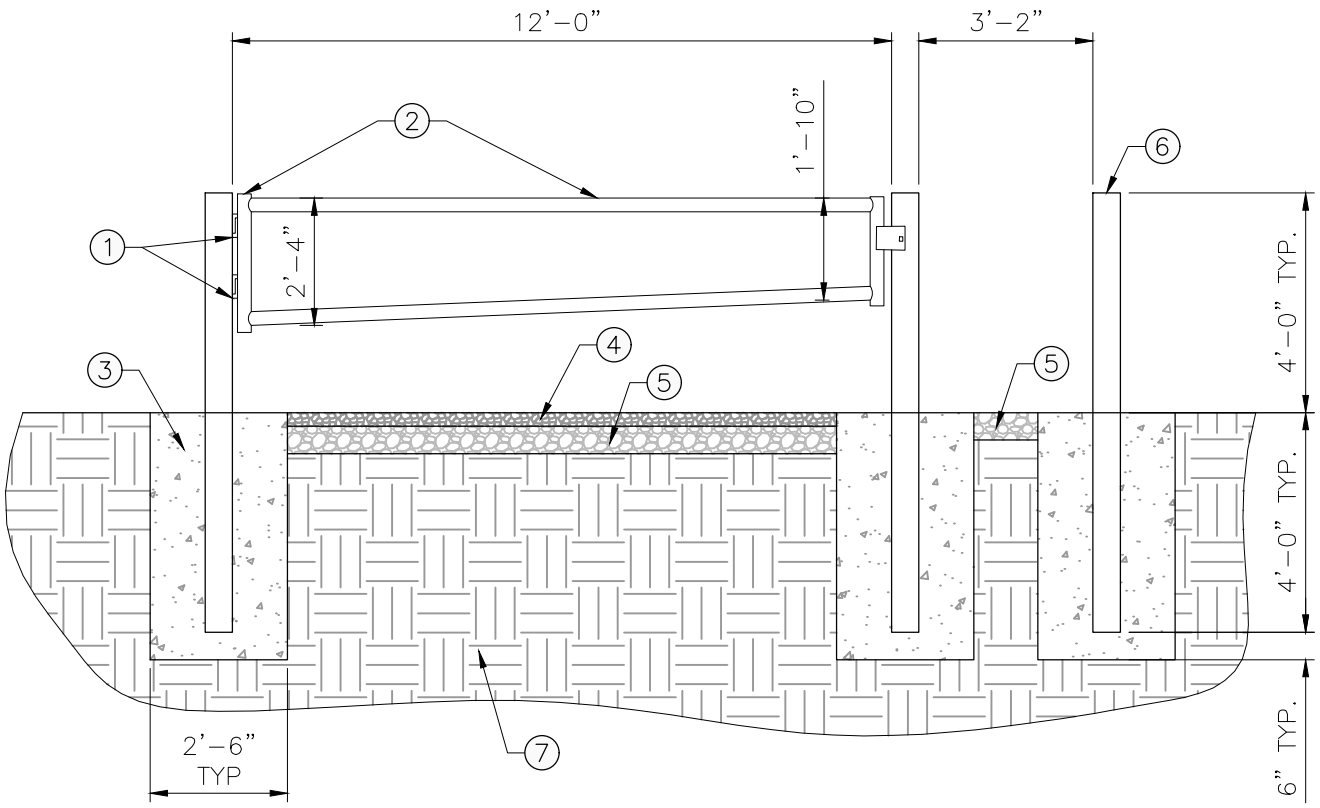

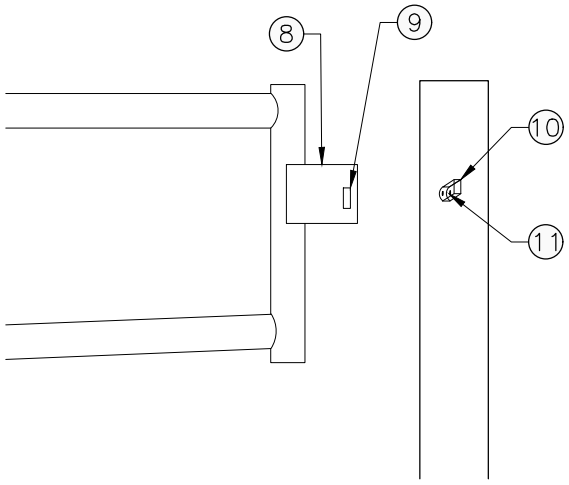

1. HINGES MUST BE HEAVY DUTY HINGES FROM METAL MART PROPERLY WELDED TO POST AND GATE
2. 3" SCHEDULE 40 PIPE TYP.
3. CONCRETE FOUNDATION 4,000 PSI
4. 3" THICK ASPHALT PER CITY
5. 6" THICK UNTREATED BASE COURSE COMPACTED PER CITY
6. 6" DIAMETER SCHEDULE 40 PIPE FILLED WITH CONCRETE TYP.
7. PROPERLY PREPARED SUBGRADE OF FILL COMPACTED PER GEOTECHNICAL REPORT AND SPECIFICATIONS
8. 0.25"X7"X5" STEEL PLATE
9. 0.75"X1.25" CUTOUT TO MATCH LOCKING STUD ON 6" DIAMETER POST
10. 1.25"X0.5"X1" STEEL PLATE
11. HOLE FOR LOCK PER CITY

NO.	REVISION DESCRIPTION	DATE

THIS DOCUMENT AND ANY ILLUSTRATIONS HEREON ARE PROVIDED AS STANDARD CONSTRUCTION DETAILS WITHIN HERRIMAN CITY. DEVIATION FROM THIS DOCUMENT REQUIRES APPROVAL OF HERRIMAN CITY. HERRIMAN CITY CANNOT BE HELD LIABLE FOR MISUSE OR CHANGES REGARDING THIS DOCUMENT.

HERRIMAN CITY

HERRIMAN CITY
ENGINEERING DEPARTMENT
LANDSCAPE
GATE ASSEMBLY FOR TRAIL HEAD (OPTION B)

LP-10

1/7/2021 5:00 PM \\SLCFILES\PUBLIC\PROJECTS\JUB\HERRIMAN\83-17-040 CITY STANDARDS MANUAL UPDATE 2017\TEXT\SUBMITTALS\SECTION 6 (COMPLETE)\2020-11-05\LP\LP-DETAILS.DWG

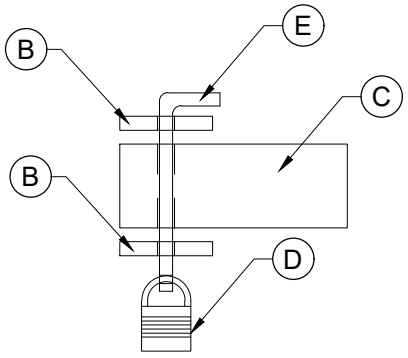

LOCK DETAIL FRONT VIEW

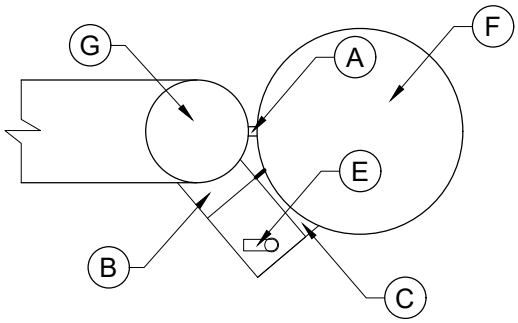

LOCK DETAIL TOP VIEW

LOCK PARTS LIST			
ITEM	QTY	DESCRIPTION	NOTE
(A)	2	HINGES	2
(B)	2	METAL PLATE	5
(C)	1	2" SQ. TUBE	7
(D)	1	PAD LOCK	1
(E)	1	LOCKING PIN	6
(F)	1	POST	3
(G)	1	GATE	4

NOTES FOR LOCK PARTS:

1. ITS THE DEVELOPERS RESPONSIBILITY TO PROVIDE LOCKS FOR GATES. LOCK MUST BE KEYED TO HERRIMAN CITY STANDARD. LOCK IS TO BE A KRYPTONITE PL1002. LOCK CAN BE PURCHASED AT ARCHITECTURAL BUILDING SUPPLY (801)486-3481.
2. THE HINGES MUST BE HEAVY DUTY HINGES FROM METAL MART.
3. THE METAL PLATE SHOULD BE 2 ½" X 4" AND ¼" THICK WITH A ⅝" HOLE FOR THE LOCKING PIN TO GO THROUGH AND MUST BE CUT AND WELDED ON APPROXIMATELY A 30% ANGLE TO THE 3" SCHEDULE 40 PIPE.
4. THE LOCKING PIN IS MADE FROM ¾" ROUND STALK THAT IS 7 ½" TALL WITH A 2 ½" BEND WITH A HOLE AT THE BOTTOM SO THAT THE LOCK CAN GO THROUGH.
5. THE TUBING SHALL BE 2 ½" SQ TUBING WITH A CAPPED END AND SHALL BE 4" LONG WITH A ⅝" HOLE FOR LOCKING PIN TO GO THROUGH CUT AND WELD ON AT APPROXIMATELY 30% ANGLE TO THE 6" SCHEDULE 40 PIPE.

1/7/2021 5:00 PM \\SLCFILES\PUBLIC\PROJECTS\JUB\HERRIMAN\83-17-040 CITY STANDARDS MANUAL UPDATE 2017\TEXT\SUBMITTALS\SECTION 6 (COMPLETE)\2020-11-05\LP\LP-DETAILS.DWG

NO.	REVISION DESCRIPTION	D-TE

THIS DOCUMENT -ND -NY ILLUSTR-TIONS HEREON -RE PROVIDED -S ST-ND-RD CONSTRUCTION DET-ILS WITHIN HERRIM-N CITY. DEVI-TION FROM THIS DOCUMENT REQUIRES -PPROV-L OF HERRIM-N CITY. HERRIM-N CITY C-NNOT BE HELD LI-BLE FOR MISUSE OR CH-NGES REG-RDING THIS DOCUMENT.

HERRIMAN CITY

HERRIMAN CITY
ENGINEERING DEPARTMENT
LANDSCAPE
LOCK ASSEMBLY FOR TRAIL HEAD GATE

LP-11

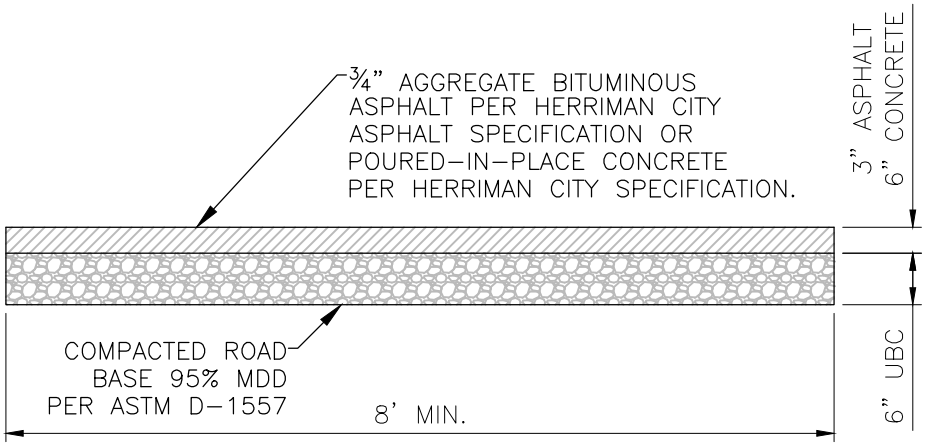

PAVED TRAIL

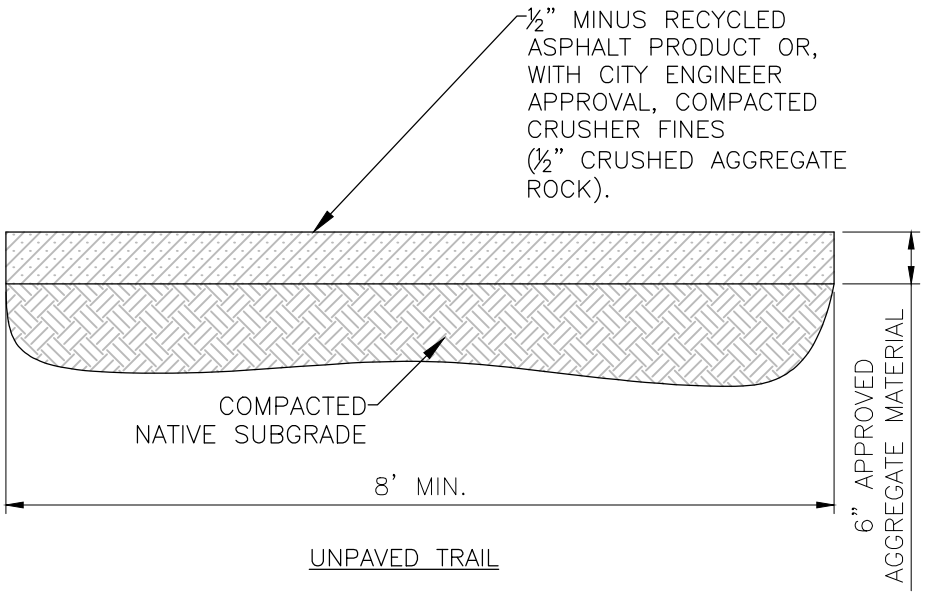

UNPAVED TRAIL

NOTE:

1. IF TRAIL ABUTS PRIVATE PROPERTY, TRAIL EDGE NEEDS TO BE OFFSET A MINIMUM OF 3 FT. FROM PROPERTY LINE OR FENCE, WHICHEVER IS MORE STRINGENT.
2. IF RECYCLED ASPHALT PRODUCT OR CRUSHER FINES ARE USED, TREAT WITH APPROPRIATE WEED CONTROL PRODUCT AND GROUND STERILANT IF ALLOWED TO BE APPLIED PER THE LABEL RECOMMENDATIONS.

NO.	REVISION DESCRIPTION	DATE

THIS DOCUMENT AND ANY ILLUSTRATIONS HEREON ARE PROVIDED AS STANDARD CONSTRUCTION DETAILS WITHIN HERRIMAN CITY. DEVIATION FROM THIS DOCUMENT REQUIRES APPROVAL OF HERRIMAN CITY. HERRIMAN CITY CANNOT BE HELD LIABLE FOR MISUSE OR CHANGES REGARDING THIS DOCUMENT.

HERRIMAN CITY

HERRIMAN CITY
ENGINEERING DEPARTMENT
LANDSCAPE
STANDARD TRAIL SECTIONS

LP-12

1/7/2021 5:00 PM \\SLCFILES\PUBLIC\PROJECTS\JUB\HERRIMAN\83-17-040 CITY STANDARDS MANUAL UPDATE 2017\TEXT\SUBMITTALS\SECTION 6 (COMPLETE)\2020-11-05\LP\LP-DETAILS.DWG

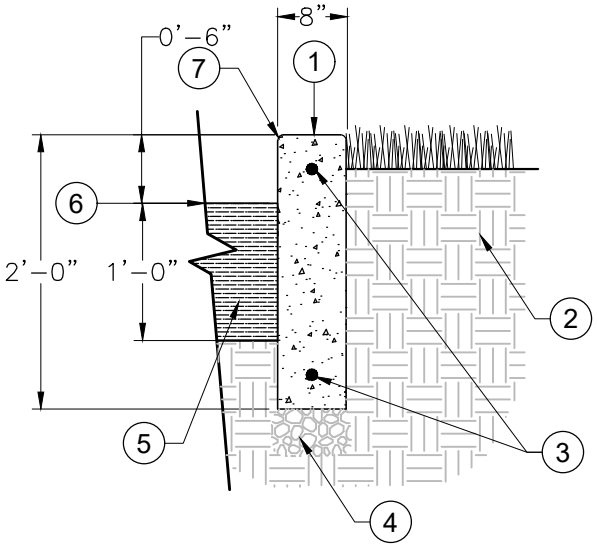

1. CONCRETE CURB WALL (4000 PSI AT 28 DAYS)
2. UNDISTURBED OR COMPACTED SUB GRADE TO 95% MDD RELATIVE DENSITY
3. (2) #4 REBAR CONT. TOP AND BOTTOM
4. 6" UNTREATED BASE COURSE COMPACTED TO 95% MDD PER ASTM D-1557
5. 12" EWF PLAYGROUND FALL SURFACING
6. PLAYGROUND FINISHED GRADE
7. ½" RADIUS

1/7/2021 5:00 PM \\SLCFILES\PUBLIC\PROJECTS\JUB\HERRIMAN\83-17-040 CITY STANDARDS MANUAL UPDATE 2017\TEXT\SUBMITTALS\SECTION 6 (COMPLETE)\2020-11-05\LP\LP-DETAILS.DWG

NO.	REVISION DESCRIPTION	D-TE

THIS DOCUMENT -ND -NY ILLUSTR-TIONS HEREON -RE PROVIDED -S ST-ND-RD CONSTRUCTION DET-ILS WITHIN HERRIM-N CITY. DEVI-TION FROM THIS DOCUMENT REQUIRES -PPROV-L OF HERRIM-N CITY. HERRIM-N CITY C-NNOT BE HELD LI-BLE FOR MISUSE OR CH-NGES REG-RDING THIS DOCUMENT.

HERRIMAN CITY

HERRIMAN CITY
ENGINEERING DEPARTMENT
LANDSCAPE
CONCRETE PLAYGROUND CURBING

LP-13

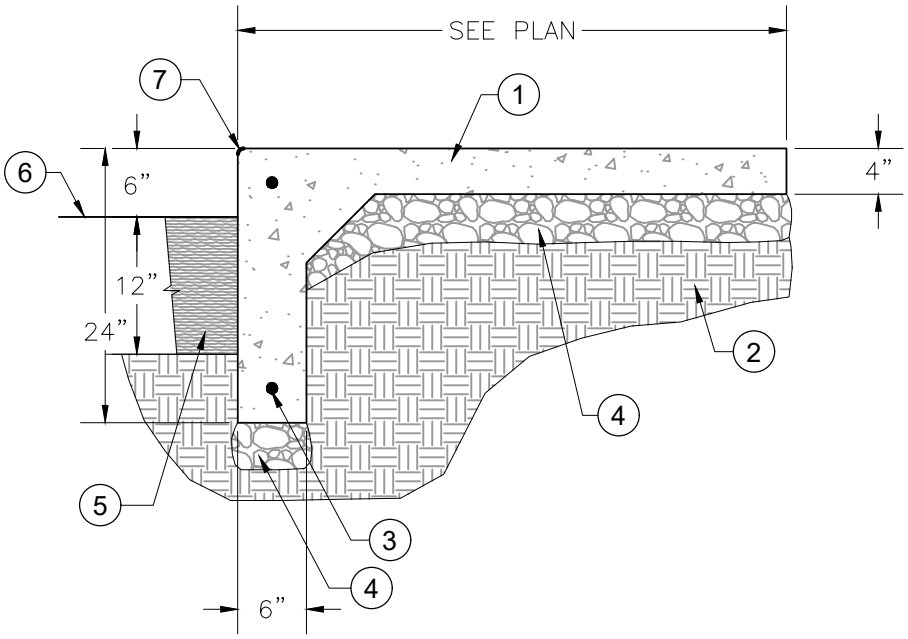

1. 4" CONCRETE WALK W/ 8"X24" DEEP EDGE (4000 PSI AT 28 DAYS)
2. UNDISTURBED OR 95% COMPACTED SUBGRADE
3. #4 REBAR CONT.
4. 4" UNTREATED BASE COURSE COMPACTED TO 95% MDD PER ASTM D-1557
5. 12" PLAYGROUND BARK
6. FINISH GRADE
7. 1/2" RADIUS

NOTE: CONTROL JOINT SPACING SHALL BE EQUAL TO WALK WIDTH. EXPANSION JOINTS SHALL BE PLACED EVERY ±40'.

1/7/2021 5:00 PM \\SLCFILES\PUBLIC\PROJECTS\JUB\HERRIMAN\83-17-040 CITY STANDARDS MANUAL UPDATE 2017\TEXT\SUBMITTALS\SECTION 6 (COMPLETE)\2020-11-05\LP\LP-DETAILS.DWG

NO.	REVISION DESCRIPTION	D-TE

THIS DOCUMENT -ND -NY ILLUSTR-TIONS HEREON -RE PROVIDED -S ST-ND-RD CONSTRUCTION DET-ILS WITHIN HERRIM-N CITY. DEVI-TION FROM THIS DOCUMENT REQUIRES -PPROV-L OF HERRIM-N CITY. HERRIM-N CITY C-NNOT BE HELD LI-BLE FOR MISUSE OR CH-NGES REG-RDING THIS DOCUMENT.

HERRIMAN CITY

HERRIMAN CITY
ENGINEERING DEPARTMENT
LANDSCAPE
DEEP EDGE PLAYGROUND SIDEWALK

LP-14

HERRIMAN CITY APPROVED TREE LIST - JUNE 2020

(All park strip or parking lot island trees shall be deciduous.)

Botanical Name/Common Name

PLANTING WIDTHS - 3-5 FEET

Acer campestre / Hedge Maple

Acer ginnala / Amur Maple (tree form, all varieties)

Acer tataricum / Tatarian Maple (tree form)

Amelanchier x grandifolia 'Autumn Brilliance' / Apple Serviceberry

Carpinus betulus 'Frans Fontaine' / Frans Fontaine Hornbeam

Cercis canadensis var. / Eastern Redbud (all varieties)

Chitalpa x tashkentensis / Chitalpa (tree form)

Crataegus spp. / Hawthorn (thornless and flowering)

Koelreuteria paniculata / Goldenrain Tree

Maackia amurensis / Amur Maackia

Malus hybrid / Flowering Crabapple (fireblight resistant varieties)

Morus alba / White Mulberry (fruitless)

Morus rubra / Red Mulberry (**fruitless**)

Ostrya virginiana / Hop Hornbeam

Quercus robur fastigiata / Columnar English Oak

Syringa pekinensis / Chinese Lilac Tree

Syringa reticulata / Japanese Tree Lilac

Ulmus parvifolia / Lace Bark Elm

Zelkova serrata 'City Sprite' / City Sprite Japanese Zelkova

PLANTING WIDTHS - 5-10 FEET

Acer pseudoplatanus / Sycamore Maple

Acer rubrum / Red Maple

Acer truncatum x platanoides / (Norwegian Sunset, Urban Sunset)

Carpinus betulus / European Hornbeam (Fastigiata)

Celtis occidentalis / Common Hackberry

Corylus colurna / Turkish Filbert

Fagus sylvatica / European Beech

Gleditsia triacanthos / Honey Locust (thornless varieties)

Ginkgo biloba / Ginkgo Maidenhair

Gymnocladus dioicus / Kentucky Coffeetree (fruitless)

Maclura pomifera 'White Shield' / Osage Orange

Parrotia persica / Persian Ironwood

Quercus bicolor / Swamp Oak

\\SLCFILES\PUBLIC\PROJECTS\JUB\HERRIMAN\83-17-040 CITY STANDARDS MANUAL UPDATE 2017\TEXT\SUBMITTALS\SECTION 6 (COMPLETE)\2020-11-05\LP\LP-DETAILS.DWG
1/7/2021 5:00 PM

NO.	REVISION DESCRIPTION	D-TE

THIS DOCUMENT -ND -NY ILLUSTR-TIONS HEREON -RE PROVIDED -S ST-ND-RD CONSTRUCTION DET-ILS WITHIN HERRIM-N CITY. DEVI-TION FROM THIS DOCUMENT REQUIRES -PPROV-L OF HERRIM-N CITY. HERRIM-N CITY C-NNOT BE HELD LI-BLE FOR MISUSE OR CH-NGES REG-RDING THIS DOCUMENT.

HERRIMAN CITY

HERRIMAN CITY
ENGINEERING DEPARTMENT
LANDSCAPE
APPROVED TREE LIST - 1 OF 3

LP-15

HERRIMAN CITY APPROVED TREE LIST - JUNE 2020 (cont.)

(All park strip or parking lot island trees shall be deciduous.)

Botanical Name/Common Name

PLANTING WIDTHS - 3-5 FEET

Quercus ellipsoidalis and cultivar 'Majestic Skies' / Northern Pin Oak

Quercus macrocarpa / Bur Oak

Quercus robur / English Oak

Quercus rubra / Northern Red Oak

Tilia cordata / Littleleaf Linden (several varieties)

Tilia euchlora / Crimean Linden

Tilia tomentosa / Silver Linden (several varieties)

FOR ALL PLANTING WIDTHS GREATER THAN 10 FEET (i.e. open space)

Acer miyabei 'State Street' / State Street Maple

Acer negundo 'Sensation' / Sensation Box Elder

Aesculus glabra / Buckeye

Aesculus x carnea / Horsechestnut (red)

Albizia julibrissin / Mimosa

Catalpa speciosa / Northern Catalpa

Celtis reticulata / Netleaf Hackberry

Cladrastis kentuckea / Yellowwood

Cornus mas / Cornelian Cherry Dogwood

Fagus sylvatica / European Beech

Liriodendron tulipifera / Tuliptree

Quercus alba / White Oak

Quercus cerris / Turkey Oak

Quercus muehlenbergii / Chinkapin Oak

Quercus shumardii / Shumard Oak

Tilia americana / American Linden

Ulmus americana / American Elm (I.E. 'Colonial Spirit', 'Prairie Expedition' - survivors of Dutch Elm Disease)

Ulmus hybrids / (i.e. 'Frontier' and 'Accolade')

Ulmus propinqua 'Emerald Sunshine' / Emerald Sunshine Elm

CONIFERS: BEST IN GROUPINGS AT ENTRANCES TO DEVELOPMENTS, OPEN SPACES AN IN NON-TRADITIONAOL PARKING STRIPS AT LEAST 20 FET WIDE

Cedrus atlantica 'Glauca' / Blue Atlas Cedar

Cedrus deodara 'Karl Fuchs', Kashmir', 'Shalimar' / Deodar Cedar

Chamaecyparis nootkatensis 'Pendula' / Weeping Alaska Cedar

1/7/2021 5:00 PM \\SLCFILES\PUBLIC\PROJECTS\JUB\HERRIMAN\83-17-040 CITY STANDARDS MANUAL UPDATE 2017\TEXT\SUBMITTALS\SECTION 6 (COMPLETE)\2020-11-05\LP\LP-DETAILS.DWG

NO.	REVISION DESCRIPTION	D-TE

THIS DOCUMENT -ND -NY ILLUSTR-TIONS HEREON -RE PROVIDED -S ST-ND-RD CONSTRUCTION DET-ILS WITHIN HERRIM-N CITY. DEVI-TION FROM THIS DOCUMENT REQUIRES -PPROV-L OF HERRIM-N CITY. HERRIM-N CITY C-NNOT BE HELD LI-BLE FOR MISUSE OR CH-NGES REG-RDING THIS DOCUMENT.

HERRIMAN CITY

HERRIMAN CITY
ENGINEERING DEPARTMENT
LANDSCAPE
APPROVED TREE LIST - 2 OF 3

HERRIMAN CITY APPROVED TREE LIST - JUNE 2020 (cont.)

(All park strip or parking lot island trees shall be deciduous.)

Botanical Name/Common Name

Calocedrus decurrens / Incense Cedar

Juniperus chinensis cultivars / Chinese Juniper

Juniperus scopulorum / Rocky Mountain Juniper

Pinus nigra (cultivars for columnar and dwarf) / Austrian Pine

Pinus leucodermis 'Heldrechii' / Bosnian Pine

Pinus sylvestris (cultivars for columnar and dwarf) / Scotch Pine

Pinus strobus / Eastern White Pine

Pinus flexilis 'Vanderwolf's Pyramid' / Vanderwolf Pine

Juniperus virginiana / Eastern Red Cedar

Pinus edulis / Pinyon pine

Sequoiadendron giganteum / Giant Sequoia

Taxodium distichum / Bald cypress

Thuja orientalis / Arborvitae (won't grow on secondary water)

Prohibited Street Trees

Acer saccharinum / Silver Maple

Ailanthus altissima / Tree of Heaven

Betula species / Birch species

Eleagnus angustifolia / Russian Olive

Fraxinus species / Ash species

Populus species / Cottonwood species

Prunus cerasifera / Cherry Plum

Prunus padus / May Day Tree

Pyrus calleryana / Flowering Pear

Robinia species / Locust species

Salix species Willow species

Sophora japonica / Japanese Pagoda Tree

Ulmus pumila / Siberian Elm

Ziziphus jujube / Chinese Date

All varieties of trees bearing fruits or nuts

All conifer trees

Thorned trees

1/7/2021 5:00 PM \\SLCFILES\PUBLIC\PROJECTS\JUB\HERRIMAN\83-17-040 CITY STANDARDS MANUAL UPDATE 2017\TEXT\SUBMITTALS\SECTION 6 (COMPLETE)\2020-11-05\LP\LP-DETAILS.DWG

NO.	REVISION DESCRIPTION	D-TE

THIS DOCUMENT -ND -NY ILLUSTR-TIONS HEREON -RE PROVIDED -S ST-ND-RD CONSTRUCTION DET-ILS WITHIN HERRIM-N CITY. DEVI-TION FROM THIS DOCUMENT REQUIRES -PPROV-L OF HERRIM-N CITY. HERRIM-N CITY C-NNOT BE HELD LI-BLE FOR MISUSE OR CH-NGES REG-RDING THIS DOCUMENT.

HERRIMAN CITY

HERRIMAN CITY
ENGINEERING DEPARTMENT
LANDSCAPE
APPROVED TREE LIST - 3 OF 3

LP-17

HERRIMAN CITY APPROVED UPLAND SEE MIX - SEPT. 2020

Botanical Name/Common Name	LBS PLS/ ACRE	% BY WEIGHT	% BY SEED
GRASSES			
Achnatherum hymenoides Indian Ricegrass / Indian Ricegrass	4.00	14.6%	10.0%
Elytrigia repens x Pseudoroegneria spicata 'Newhy' / Newhy Hybrid Wheatgrass	3.50	12.7%	8.7%
E**lymus lanceolatus ssp. lanceolatus** / Thickspike Wheatgrass	3.50	12.7%	9.6%
Elylmus trachycaulus ssp. Trachycaulus 'Pryor' / Pryor Slender Wheatgrass	4.00	14.6%	11.3%
Festuca ovina 'Covar' / Covar Sheep Fescue	0.60	2.2%	7.2%
Poa secunda ssp. Sandbergii / Sandberg Bluegrass	0.40	1.5%	6.6%
FORBS/SHTUBS/COVER CROP			
Artemisia fridiga / Fringed Sagebrush	0.03	0.1%	2.4%
Chrysothamnus viscidiflorus / Douglas Rabbitbrush	0.15	0.5%	6.6%
Oenothera pallida / White Evening Primrose	0.30	1.1%	2.7%
Triticum aestivum x Secale cereale / QuickGuard Sterile Triticale	6.00	21.8%	1.4%
***ROCKY MOUNTAIN WILDFLOWER MIX**			
Linum perenne / Blue Flax	1.40	5.1%	7.3%
Sanguisorba minor / Small Burnet	0.40	5.1%	7.3%
Rudbeckia hirta / Black-eyed Susan	0.11	0.4%	3.3%
Eschscholzia californica / California Poppy	0.40	1.5%	2.3%
Cheiranthus allionii / Wallflower	0.29	1.1%	1.5%
Gaillardia pulochella / Firewheel	0.29	1.1%	0.8%
Lupinus sericeus / Silky Lupine	0.40	1.5%	0.1%
Penstemon strictus / Rocky Mountain Penstemon	0.23	0.8%	2.4%
Coreopsis lanceolate / Lance-leafed Coreopsis	0.34	1.2%	1.3%
Ratibida columnifera / Prairie Coneflower	0.11	0.4%	2.4%
Ratibida columnifera forma pulcherrima / Mexican Hat	0.11	0.4%	2.4%
Papaver rhhoeas / Flanders Poppy	0.09	0.3%	5.1%
Penstemon palmeri / Palmer Penstemon	0.23	0.8%	2.2%
Coreopsis tinctoria / Plains Coreopsis	0.09	0.3%	2.2%
Linanthus grandifloras / Moountain Phlox	0.13	0.1%	0.5%
Lupinus argenteus ssp. Rubricaulis / Mountain Lupine	0.17	0.6%	3.0%
Geranium viscosissimum / Wild Geranium	0.08	0.3%	0.1%
Gaillardia aristate / Blanket Flower	0.23	0.8%	0.5%

*Rocky Mountain Wildflower Mix is a proprietary seed mix provided by Granite Seed and Erosion Control Company. They can provide the entire seed mixs as described above. Their contact infromation is shown below:

Granite Seed, 1697 West 2100 North, Lehhi, Utah 84043

1/7/2021 5:01 PM \\SLCFILES\PUBLIC\PROJECTS\JUB\HERRIMAN\83-17-040 CITY STANDARDS MANUAL UPDATE 2017\TEXT\SUBMITTALS\SECTION 6 (COMPLETE)\2020-11-05\LP\LP-DETAILS.DWG

NO.	REVISION DESCRIPTION	D-TE

THIS DOCUMENT -ND -NY ILLUSTR-TIONS HEREON -RE PROVIDED -S ST-ND-RD CONSTRUCTION DET-ILS WITHIN HERRIM-N CITY. DEVI-TION FROM THIS DOCUMENT REQUIRES -PPROV-L OF HERRIM-N CITY. HERRIM-N CITY C-NNOT BE HELD LI-BLE FOR MISUSE OR CH-NGES REG-RDING THIS DOCUMENT.

HERRIMAN CITY

HERRIMAN CITY
ENGINEERING DEPARTMENT
LANDSCAPE
APPROVED SEED MIX

LP-18

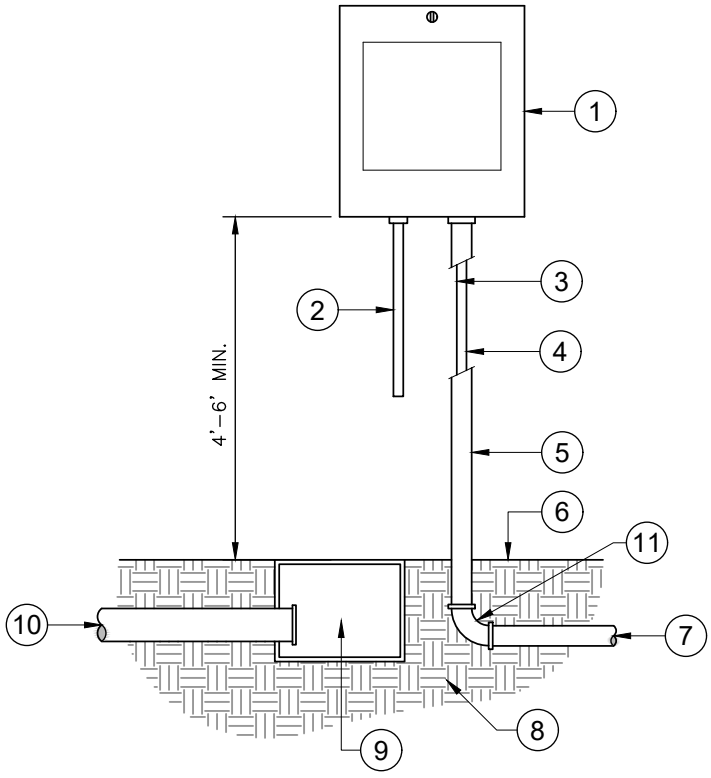

1. CONTROLLER ENCLOSURES WITH CONTROLLER – SEE IRRIGATION EQUIPMENT SCHEDULE
2. 120–VOLT WIRE IN RIGID CONDUIT
3. COMMON WIRE (TRADITIONAL WIRING)
4. CONTROL WIRES (TRADITIONAL WIRING)
5. RIGID CONDUIT TO MAIN LINE
6. FINISHED GRADE
7. UF DIRECT–BURIAL WIRES TO REMOTE CONTROL VALVES
8. SUBGRADE COMPACTED TO 95% MDD PER ASTM D–1557
9. ELECTRICAL PULL BOX (IF REQUIRED)
10. 3" CONDUIT FOR FUTURE EXPANSION (IF REQUIRED)
11. SWEEP ELL FITTING

NOTES:

1. GROUND ROD OR COPPER GROUND PLATE MIN. 8' AND 12' MAX. AWAY FROM CONTROLLER. REFER TO MANUFACTURER'S RECOMMENDATION FOR GROUNDING EQUIPMENT SIZE AND INSTALLATION.
2. GROUNDING RESISTANCE SHOULD BE MEASURED AT 10 OHMS OR LESS. IF GREATER THAN 10 OHMS, A SECOND GROUNDING ROD OR PLATE MAY BE REQUIRED.
3. ON WALL MOUNTED CONTROLLERS, GROUNDING MAY BE TIED INTO BUILDING GROUNDING SYSTEM WHERE POSSIBLE.
4. IN TWO–WIRE SYSTEMS BOTH THE COMMON WIRE AND THE CONTROL WIRE ARE COMBINED INTO A SINGLE 2–WIRE CABLE.

1/7/2021 4:47 PM \\SLCFILES\PUBLIC\PROJECTS\JUB\HERRIMAN\83-17-040 CITY STANDARDS MANU-L UPDATE 2017\TEXT\SUBMITTALS\SECTION 6 (COMPLETE)\2020-11-05\IR\IR-DETAILS.DWG

NO.	REVISION DESCRIPTION	D-TE

THIS DOCUMENT -ND -NY ILLUSTR-TIONS HEREON -RE PROVIDED -S ST-ND-RD CONSTRUCTION DET-ILS WITHIN HERRIM-N CITY. DEVI-TION FROM THIS DOCUMENT REQUIRES -PPROV-L OF HERRIM-N CITY. HERRIM-N CITY C-NNOT BE HELD LI-BLE FOR MISUSE OR CH-NGES REG-RDING THIS DOCUMENT.

HERRIMAN CITY

HERRIMAN CITY
ENGINEERING DEPARTMENT
IRRIGATION
WALL-MOUNT CONTROLLER

IR-01

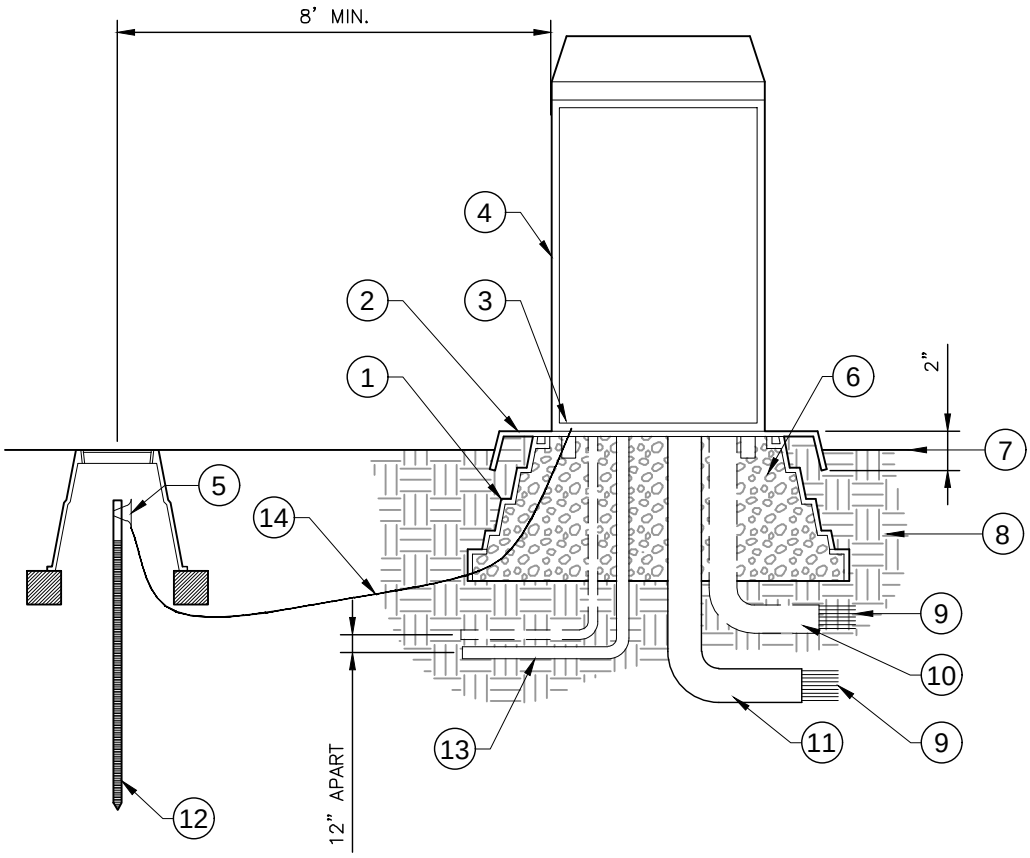

1. PRE–FORMED SUPPORT BASE
2. QUICKPAD 3/16" MIN. THICKNESS ALUMINUM POWDER COATED PREFORMED PAD
3. (2) QUICKPAD FASTENING BRACKET
4. CONTROLLER AND CONTROLLER ENCLOSURE – SEE IRRIGATION EQUIPMENT SCHEDULE
5. CADWELD CLAMP CONNECTED TO CONTROLLER GROUND WIRE
6. FILL INSIDE BASE WITH PEA GRAVEL
7. FINISHED GRADE
8. SUBGRADE COMPACTED TO 90% MDD PER ASTM D–1557
9. DIRECT BURIAL CONTROL WIRES TO CONTROL VALVES. IN 2–WIRE SYSTEM, PLACE CABLES IN PVC ELECTRICAL CONDUIT.
10. ADDITIONAL PVC CONDUIT W/ SWEEP ELL – AS NEEDED (TRADITIONAL WIRING)
11. 2" PVC CONDUIT W/ SWEEP ELL – MAX. 40 14 AWG WIRES (TRADITIONAL WIRING)
12. 5/8" X 8' COPPER CLAD GROUND ROD INSTALL GROUNDING PER MANUFACTURER'S RECOMMENDATIONS.
13. 120 – VOLT SERVICE IN CONDUIT
14. 8 AWG BARE SOLID COPPER WIRE

NOTES:

1. GROUND ROD OR COPPER GROUND PLATE MIN. 8' AND 12' MAX. AWAY FROM CONTROLLER. REFER TO MANUFACTURER'S RECOMMENDATION FOR GROUNDING EQUIPMENT SIZE AND INSTALLATION.
2. GROUNDING RESISTANCE SHOULD BE MEASURED AT 10 OHMS OR LESS. IF GREATER THAN 10 OHMS, A SECOND GROUNDING ROD OR PLATE MAY BE REQUIRED.
3. IN TWO–WIRE SYSTEMS BOTH THE COMMON WIRE AND THE CONTROL WIRE ARE COMBINED INTO A SINGLE 2–WIRE CABLE.
4. QUICKPAD MAY BE REPLACED WITH 6" THICK CONCRETE PAD. CONCRETE PAD DIMENSIONS SHALL BE 6" LARGER ON ALL SIDES THAN THE FOOTPRINT OF CONTROL BOX.

\\SLCFILES\PUBLIC\PROJECTS\JUB\HERRIMAN\83-17-040 CITY STANDARDS MANUAL UPDATE 2017\TEXT\SUBMITTALS\SECTION 6 (COMPLETE)\2020-11-05\IR\IR-DETAILS.DWG
1/7/2021 4:47 PM

NO.	REVISION DESCRIPTION	DATE

THIS DOCUMENT AND ANY ILLUSTRATIONS HEREON ARE PROVIDED AS STANDARD CONSTRUCTION DETAILS WITHIN HERRIMAN CITY. DEVIATION FROM THIS DOCUMENT REQUIRES APPROVAL OF HERRIMAN CITY. HERRIMAN CITY CANNOT BE HELD LIABLE FOR MISUSE OR CHANGES REGARDING THIS DOCUMENT.

HERRIMAN CITY
ENGINEERING DEPARTMENT
IRRIGATION
PEDESTAL-MOUNT CONTROLLER

IR-02

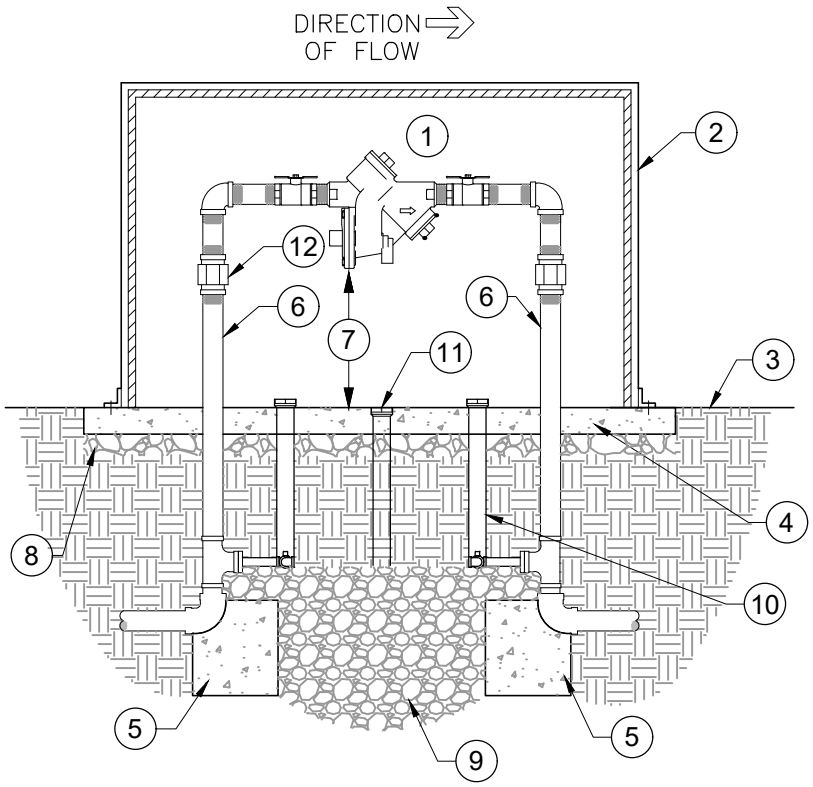

NOTES:

1. ALL FITTINGS SHALL BE BRASS. FITTINGS ON THE DOWNSTREAM SIDE OF THE BACKFLOW PREVENTER SHALL MIRROR THOSE ON THE UPSTREAM SIDE.
2. FLANGED BACKFLOW PREVENTERS (REGARDLESS OF SIZE) DO NOT REQUIRE UNIONS.

(1) REDUCED PRESSURE BACKFLOW PREVENTION DEVICE WITH TWO (2) BRASS BALL VALVES – SEE IRRIGATION EQUIPMENT SCHEDULE FOR TYPE AND SIZE

(2) BACKFLOW ENCLOSURE – SEE IRRIGATION EQUIPMENT SCHEDULE (INSTALL PER MANUFACTURER'S SPECIFICATIONS)

(3) FINISHED GRADE

(4) 4" THICK CONCRETE PAD (SIZE AS REQUIRED, EXTEND 6" BEYOND OUTSIDE DIMENSIONS OF ENCLOSURE)

(5) CONCRETE THRUST BLOCK

(6) THREADED BRASS SPOOL (TYP.) – SIZE AND LENGTH AS REQUIRED

(7) 12" MIN. 30" MAX.

(8) 4" MIN. DEPTH ROAD BASE COMPACTED TO 95% MDD PER ASTM D-1557

(9) ¾" CRUSHED SEWER ROCK SUMP 18" DEEP AND EXTEND TO GALVANIZED TEES. WRAP ENTIRE SUMP WITH GEOTEXTILE FABRIC.

(10) MANUAL DRAIN VALVE – SEE EQUIPMENT LIST AND MANUAL DRAIN VALVE DETAIL FOR MORE INFORMATION.

(11) DRAIN OUTLET – 4" DRAIN GRATE WITH 4" PVC PIPE PLUMBED TO GRAVEL SUMP.

(11) BRASS UNION (TYP.)

NO.	REVISION DESCRIPTION	DATE

THIS DOCUMENT AND ANY ILLUSTRATIONS HEREON ARE PROVIDED AS STANDARD CONSTRUCTION DETAILS WITHIN HERRIMAN CITY. DEVIATION FROM THIS DOCUMENT REQUIRES APPROVAL OF HERRIMAN CITY. HERRIMAN CITY CANNOT BE HELD LIABLE FOR MISUSE OR CHANGES REGARDING THIS DOCUMENT.

HERRIMAN CITY

HERRIMAN CITY
ENGINEERING DEPARTMENT
IRRIGATION
REDUCED PRESSURE BACKFLOW ASSEMBLY

IR-03

1/7/2021 4:48 PM \\SLCFILES\PUBLIC\PROJECTS\JUB\HERRIMAN\83-17-040 CITY STANDARDS MANUAL UPDATE 2017\TEXT\SUBMITTALS\SECTION 6 (COMPLETE)\2020-11-05\IR\IR-DETAILS.DWG

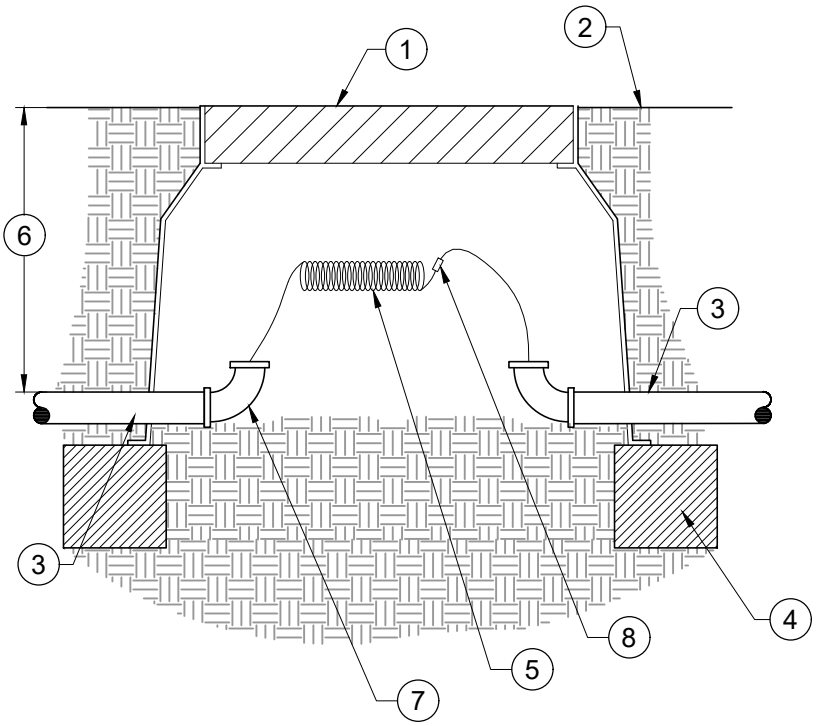

1. FIBRELYTE COMPOSITE IRRIGATION BOX OR APPROVED EQUAL IN CONCRETE ONLY. STANDARD 10" GREEN PLASTIC BOX IN LANDSCAPE AREAS.
2. FINISHED GRADE – PAVED AREA
3. SCH. 40 PVC SLEEVE (SEE IRRIGATION PLANS FOR SIZE)
4. 4"X4" TREATED TIMBER FRAME
5. 2' EXCESS COILED WIRE
6. DEPTH – 18–24" MIN.
7. SWEEP ELL (TYP.)
8. 3M DBR/Y DRY CONNECTION SPLICE IF REQUIRED

1/7/2021 4:48 PM \\SLCFILES\PUBLIC\PROJECTS\JUB\HERRIMAN\83-17-040 CITY STANDARDS MANUAL UPDATE 2017\TEXT\SUBMITTALS\SECTION 6 (COMPLETE)\2020-11-05\IR\IR-DETAILS.DWG

NO.	REVISION DESCRIPTION	D-TE

THIS DOCUMENT -ND -NY ILLUSTR-TIONS HEREON -RE PROVIDED -S ST-ND-RD CONSTRUCTION DET-ILS WITHIN HERRIM-N CITY. DEVI-TION FROM THIS DOCUMENT REQUIRES -PPROV-L OF HERRIM-N CITY. HERRIM-N CITY C-NNOT BE HELD LI-BLE FOR MISUSE OR CH-NGES REG-RDING THIS DOCUMENT.

HERRIMAN CITY

HERRIMAN CITY
ENGINEERING DEPARTMENT
IRRIGATION
IRRIGATION CONTROL WIRE PULL BOX

IR-04

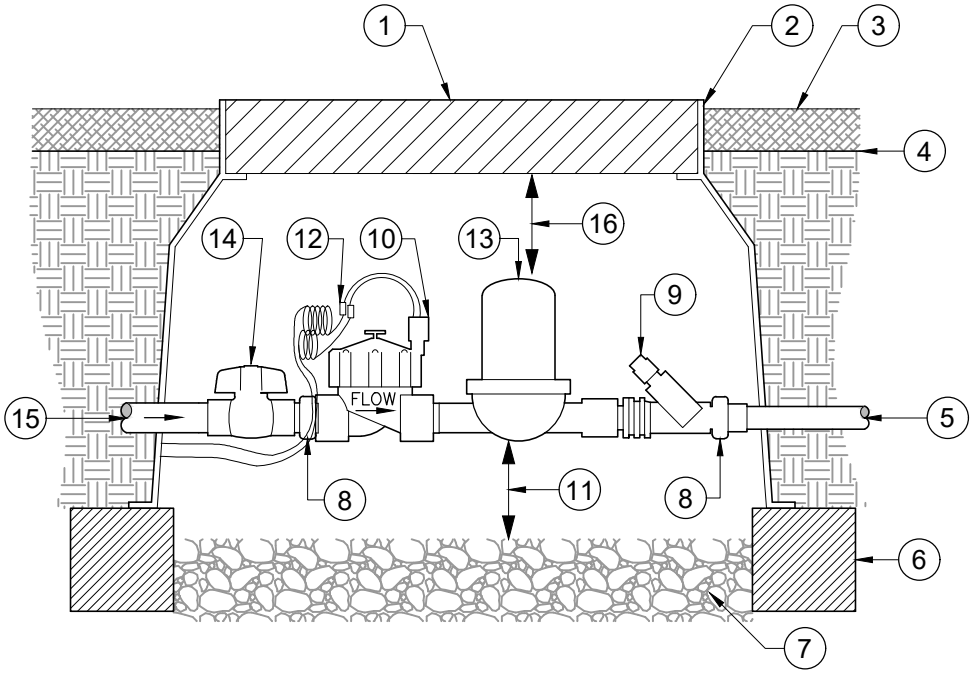

1. 18" JUMBO GREEN PLASTIC VALVE BOX W/ BOLT LOCK (CARSON OR APPROVED EQUAL)
2. FLUSH WITH PLANTING BED FINISH SURFACE
3. PLANTING BED MULCH – SEE PLANTING PLANS FOR DEPTH AND MATERIAL
4. FINISHED GRADE
5. TO PVC SUPPLY HEADER
6. 4"x4" TREATED TIMBER FRAME
7. 4" MIN. ¾" SEWER ROCK
8. ACTION UNION – PART 18010–XX, PART 18011–XX, PART 18012
9. INLINE PRESSURE REGULATOR
10. ELECTRIC CONTROL VALVE – SEE IRRIGATION EQUIPMENT SCHEDULE
11. 4" MIN. CLEARANCE
12. (2) 3M DBR/Y WATER TIGHT WIRE CONNECTORS. COIL SPARE WIRE 2'
13. INLINE FILTER
14. PLASTIC PVC BALL VALVE (LINE SIZE)
15. FLOW FROM PVC MAIN LINE
16. 2" FROM BOTTOM OF VALVE BOX LID TO TALLEST HARDWARE INSIDE

1/7/2021 4:48 PM \\SLCFILES\PUBLIC\PROJECTS\JUB\HERRIMAN\83-17-040 CITY STANDARDS MANUAL UPDATE 2017\TEXT\SUBMITTALS\SECTION 6 (COMPLETE)\2020-11-05\IR\IR-DETAILS.DWG

NO.	REVISION DESCRIPTION	DATE

THIS DOCUMENT AND ANY ILLUSTRATIONS HEREON ARE PROVIDED AS STANDARD CONSTRUCTION DETAILS WITHIN HERRIMAN CITY. DEVIATION FROM THIS DOCUMENT REQUIRES APPROVAL OF HERRIMAN CITY. HERRIMAN CITY CANNOT BE HELD LIABLE FOR MISUSE OR CHANGES REGARDING THIS DOCUMENT.

HERRIMAN CITY

HERRIMAN CITY
ENGINEERING DEPARTMENT
IRRIGATION
DRIP ZONE CONTROL VALVE ASSEMBLY

IR-05

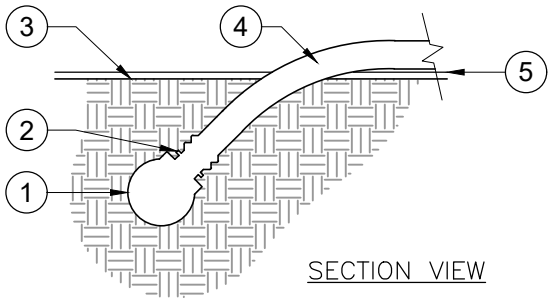

SECTION VIEW

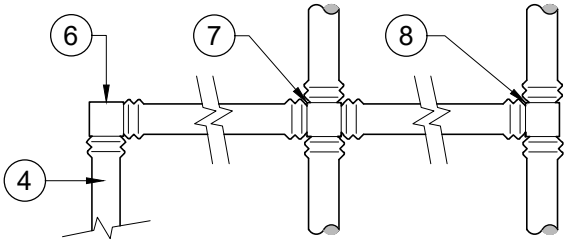

PLAN VIEW

1. 1 1/2" PVC HEADER
2. NETAFIM TLIAPVC CONNECTION
3. PLANTING BED FINISHED GRADE
4. DRIPLINE / BLANK TUBING
5. WEED BARRIER FABRIC
6. ELBOW
7. CROSS
8. TEE

NO.	REVISION DESCRIPTION	D-TE

THIS DOCUMENT -ND -NY ILLUSTR-TIONS HEREON -RE PROVIDED -S ST-ND-RD CONSTRUCTION DET-ILS WITHIN HERRIM-N CITY. DEVI-TION FROM THIS DOCUMENT REQUIRES -PPROV-L OF HERRIM-N CITY. HERRIM-N CITY C-NNOT BE HELD LI-BLE FOR MISUSE OR CH-NGES REG-RDING THIS DOCUMENT.

HERRIMAN CITY

HERRIMAN CITY
ENGINEERING DEPARTMENT
IRRIGATION
DRIPLINE CONNECTIONS

IR-06

1/7/2021 4:48 PM \\SLCFILES\PUBLIC\PROJECTS\JUB\HERRIMAN\83-17-040 CITY STANDARDS MANUAL UPDATE 2017\TEXT\SUBMITTALS\SECTION 6 (COMPLETE)\2020-11-05\IR\IR-DETAILS.DWG

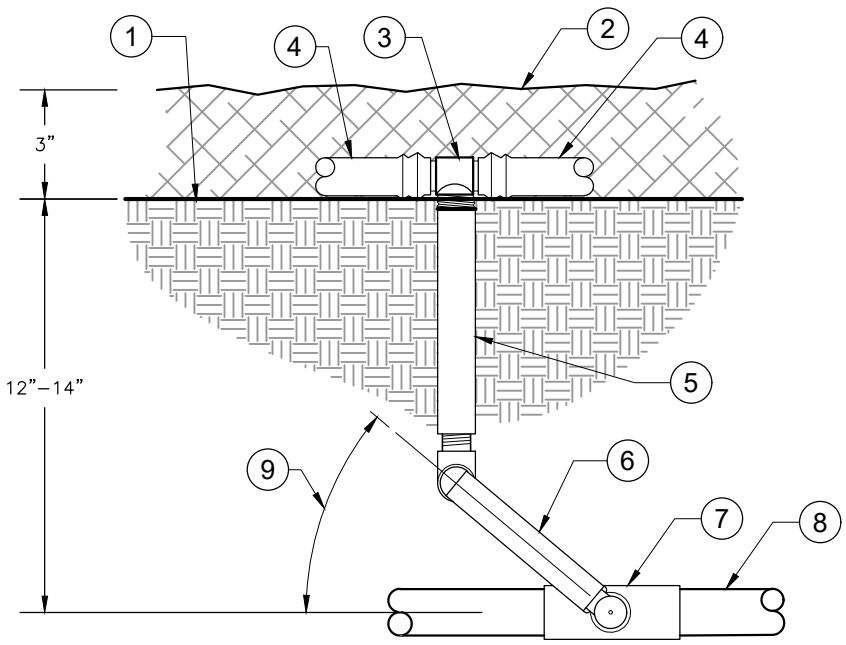

1. FINISHED GRADE
2. BARK MULCH 3" DEPTH
3. COMBINATION TEE INS X INS X 3/4" FPT MODEL: TL075FTEE
4. TECHLINE CV DRIPLINE (SEE PLANS FOR EMMITER SIZE AND SPACING)
5. 3/4" PVC MPT THREADED TOE NIPPLE RISER
6. LASCO UNITIZED SWING JOINT OR SPEARS SWING JOINT RISER ASSEMBLY; 6" IN LENGTH
7. PVC SCHEDULE 40 SXSXT TEE
8. PVC LATERAL LINE, SIZE AS NOTED ON PLAN
9. SWING JOINT ARM INSTALLED AT ANGLE BETWEEN 20 AND 45 DEG. OF LATERAL PIPE

1/7/2021 4:49 PM \\SLCFILES\PUBLIC\PROJECTS\JUB\HERRIMAN\83-17-040 CITY STANDARDS MANUAL UPDATE 2017\TEXT\SUBMITTALS\SECTION 6 (COMPLETE)\2020-11-05\IR\IR-DETAILS.DWG

NO.	REVISION DESCRIPTION	D-TE

THIS DOCUMENT -ND -NY ILLUSTR-TIONS HEREON -RE PROVIDED -S ST-ND-RD CONSTRUCTION DET-ILS WITHIN HERRIM-N CITY. DEVI-TION FROM THIS DOCUMENT REQUIRES -PPROV-L OF HERRIM-N CITY. HERRIM-N CITY C-NNOT BE HELD LI-BLE FOR MISUSE OR CH-NGES REG-RDING THIS DOCUMENT.

HERRIMAN CITY

HERRIMAN CITY
ENGINEERING DEPARTMENT
IRRIGATION
DRIP TEE CONNECTION TO PVC RISER

IR-07

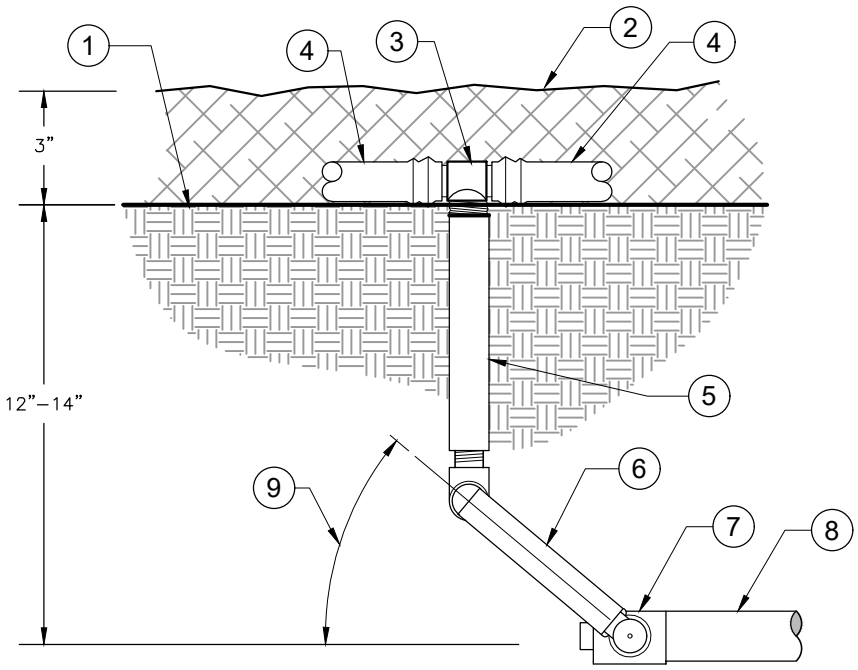

1. FINISHED GRADE
2. BARK MULCH 3" DEPTH
3. COMBINATION TEE INS X INS X 3/4" FPT MODEL: TL075FTEE
4. TECHLINE CV DRIPLINE (SEE PLANS FOR EMMITER SIZE AND SPACING)
5. 3/4" PVC MPT THREADED TOE NIPPLE RISER
6. LASCO UNITIZED SWING JOINT OR SPEARS SWING JOINT RISER ASSEMBLY; 6" IN LENGTH
7. PVC SCHEDULE 40 SXSXT TEE
8. PVC LATERAL LINE, SIZE AS NOTED ON PLAN
9. SWING JOINT ARM INSTALLED AT ANGLE BETWEEN 20 AND 45 DEG. OF LATERAL PIPE

1/7/2021 4:49 PM \\SLCFILES\PUBLIC\PROJECTS\JUB\HERRIMAN\83-17-040 CITY STANDARDS MANUAL UPDATE 2017\TEXT\SUBMITTALS\SECTION 6 (COMPLETE)\2020-11-05\IR\IR-DETAILS.DWG

NO.	REVISION DESCRIPTION	D-TE

THIS DOCUMENT -ND -NY ILLUSTR-TIONS HEREON -RE PROVIDED -S ST-ND-RD CONSTRUCTION DET-ILS WITHIN HERRIM-N CITY. DEVI-TION FROM THIS DOCUMENT REQUIRES -PPROV-L OF HERRIM-N CITY. HERRIM-N CITY C-NNOT BE HELD LI-BLE FOR MISUSE OR CH-NGES REG-RDING THIS DOCUMENT.

HERRIMAN CITY

HERRIMAN CITY
ENGINEERING DEPARTMENT
IRRIGATION
DRIP ELL CONNECTION TO PVC RISER

IR-08

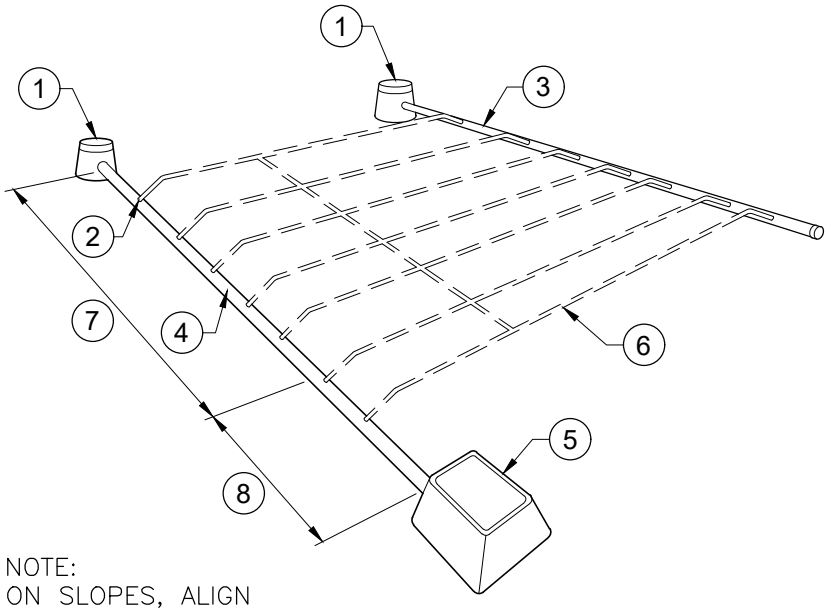

NOTE:
ON SLOPES, ALIGN DRIPLINE PARALLEL TO THE CONTOURS OF THE SLOPE.

1. MANUAL FLUSH VALVE PLUMBED TO PVC AT LOWEST POINT
2. NETAFIM TLIAPVC CONNECTOR
3. 1 ½" PVC EXHAUST HEADER (SEE NOTES FOR DEPTH)
4. 1 ½" PVC SUPPLY HEADER (SEE NOTES FOR DEPTH)
5. REMOTE CONTROL VALVE ASSEMBLY
6. DRIPLINE TUBING LATERAL – INSTALL AT GRADE UNDER MULCH AND ON TOP OF FABRIC (IF FABRIC IS USED)
7. ON SLOPES, USE THE SPECIFIED DRIPLINE SPACING ON THE TOP ⅔ OF THE SLOPE
8. ON SLOPES, USE THE SPECIFIED DRIPLINE SPACING PLUS 25% ON THE BOTTOM ⅓ OF SLOPE

1/7/2021 4:49 PM \\SLCFILES\PUBLIC\PROJECTS\JUB\HERRIMAN\83-17-040 CITY STANDARDS MANUAL UPDATE 2017\TEXT\SUBMITTALS\SECTION 6 (COMPLETE)\2020-11-05\IR\IR-DETAILS.DWG

NO.	REVISION DESCRIPTION	D-TE

THIS DOCUMENT -ND -NY ILLUSTR-TIONS HEREON -RE PROVIDED -S ST-ND-RD CONSTRUCTION DET-ILS WITHIN HERRIM-N CITY. DEVI-TION FROM THIS DOCUMENT REQUIRES -PPROV-L OF HERRIM-N CITY. HERRIM-N CITY C-NNOT BE HELD LI-BLE FOR MISUSE OR CH-NGES REG-RDING THIS DOCUMENT.

HERRIMAN CITY

HERRIMAN CITY
ENGINEERING DEPARTMENT
IRRIGATION
DRIPLINE CIRCUIT LAYOUT

IR-09

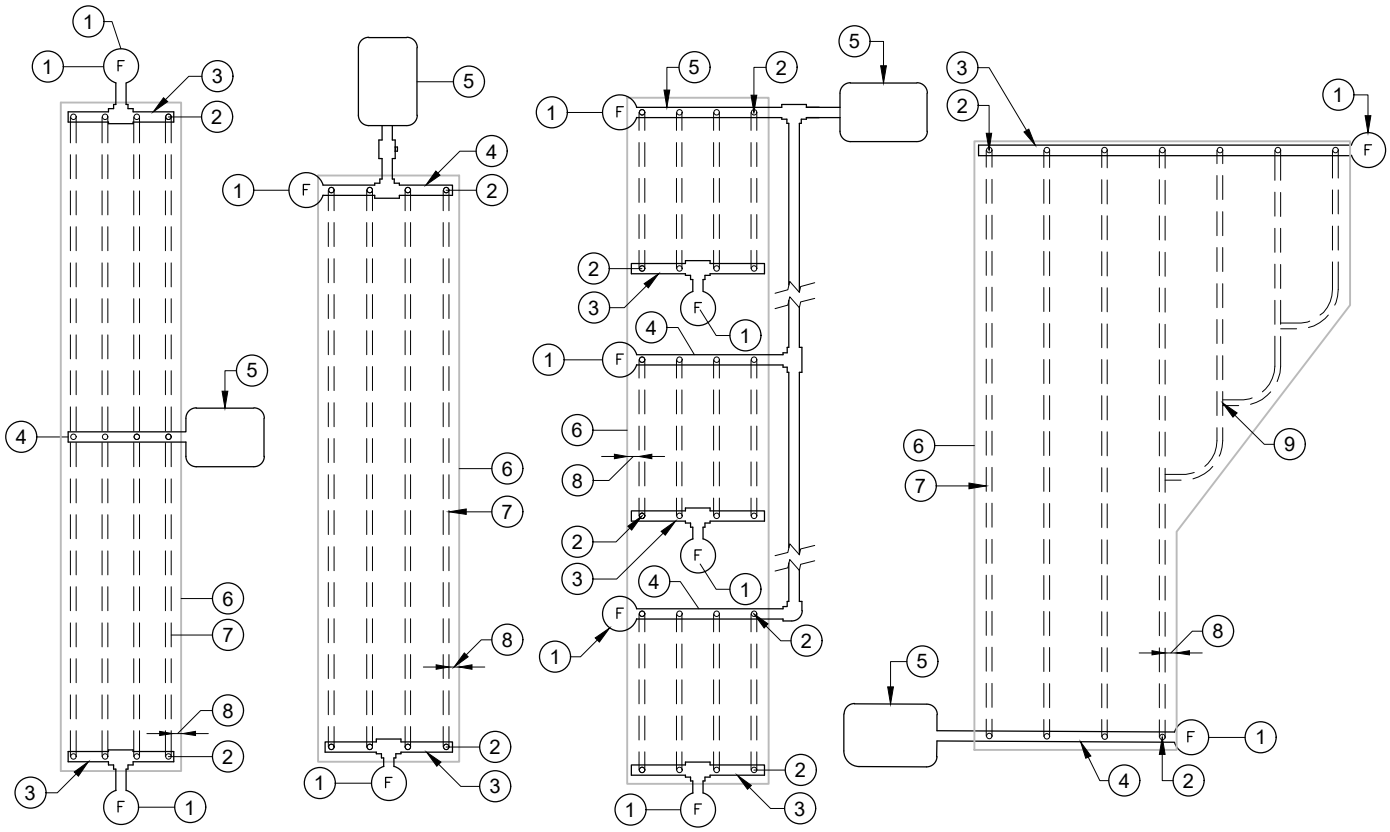

1. MANUAL FLUSH VALVE PLUMBED TO PVC IN LOWEST POINT
2. NETAFIM TLIAPVC CONNECTOR
3. 1 1/2" PVC EXHAUST HEADER
4. 1 1/2" PVC SUPPLY HEADER
5. REMOTE CONTROL VALVE ASSEMBLY
6. AREA PERIMETER
7. DRIPLINE TUBING LATERAL
8. PERIMETER DRIPLINE TUBING LATERALS 2" TO 4" FROM EDGE
9. DRIPLINE TEE

\\SLCFILES\PUBLIC\PROJECTS\JUB\HERRIMAN\83-17-040 CITY STANDARDS MANUAL UPDATE 2017\TEXT\SUBMITTALS\SECTION 6 (COMPLETE)\2020-11-05\IR\IR-DETAILS.DWG
1/7/2021 4:49 PM

NO.	REVISION DESCRIPTION	DATE

THIS DOCUMENT AND ANY ILLUSTRATIONS HEREON ARE PROVIDED AS STANDARD CONSTRUCTION DETAILS WITHIN HERRIMAN CITY. DEVIATION FROM THIS DOCUMENT REQUIRES APPROVAL OF HERRIMAN CITY. HERRIMAN CITY CANNOT BE HELD LIABLE FOR MISUSE OR CHANGES REGARDING THIS DOCUMENT.

HERRIMAN CITY

HERRIMAN CITY
ENGINEERING DEPARTMENT
IRRIGATION
INLINE DRIP LAYOUTS

IR-10

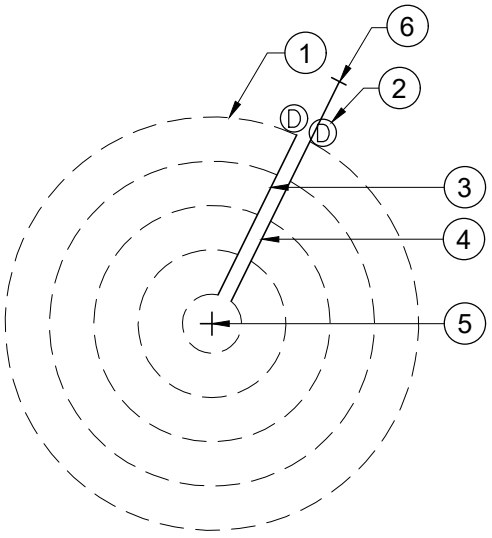

1. DRIPLINE TUBING – ATTACH TO HEADERS USING INSERT ADAPTOR W/ GROMMET*
2. DRIP FLUSH VALVE**
3. 1 1/2" EXHAUST HEADER
4. 1 1/2" SUPPLY HEADER
5. TREE CENTER
6. LATERAL LINE SUPPLY

NOTES:
* NETAFIM #TLIAPVC–B
**LOCATE DRAINS AT END OF HEADERS WHICH ARE THE LOWEST POINT OF TREE RING.

SPACE DRIP TUBING 12" FROM TRUNK WITH ADDITIONAL TUBING RINGS 18" APART.

1/7/2021 4:49 PM \\SLCFILES\PUBLIC\PROJECTS\JUB\HERRIMAN\83-17-040 CITY STANDARDS MANUAL UPDATE 2017\TEXT\SUBMITTALS\SECTION 6 (COMPLETE)\2020-11-05\IR\IR-DETAILS.DWG

NO.	REVISION DESCRIPTION	D-TE

THIS DOCUMENT -ND -NY ILLUSTR-TIONS HEREON -RE PROVIDED -S ST-ND-RD CONSTRUCTION DET-ILS WITHIN HERRIM-N CITY. DEVI-TION FROM THIS DOCUMENT REQUIRES -PPROV-L OF HERRIM-N CITY. HERRIM-N CITY C-NNOT BE HELD LI-BLE FOR MISUSE OR CH-NGES REG-RDING THIS DOCUMENT.

HERRIMAN CITY

HERRIMAN CITY
ENGINEERING DEPARTMENT
IRRIGATION
DRIP TREE RING

IR-11

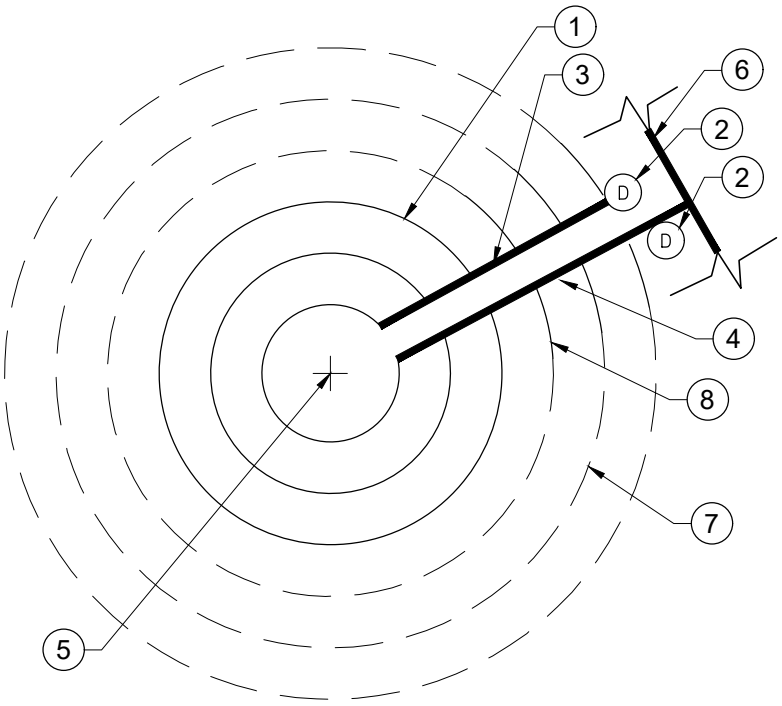

PLAN VIEW

1. DRIPLINE TUBING – ATTACH TO HEADERS USING INSERT ADAPTOR W/ GROMMET*
2. DRIP FLUSH VALVE**
3. 1 1/2" EXHAUST HEADER
4. 1 1/2" SUPPLY HEADER
5. TREE CENTER
6. LATERAL LINE SUPPLY
7. FUTURE DRIPLINE TUBING – ATTACH TO STUBBED TUBING
8. STUBBED TUBING WITH INSERT COUPLING ON END FOR FUTURE EXPANSION (TYP). FOLD AND CLAMP TUBING CLOSED. STUBBED TUBING SHALL LIE ON FINISHED GRADE. (SEE STUBBED TUBING SECTION DETAIL FOR MORE INFORMATION)

NOTES:
* NETAFIM #TLIAPVC–B
** LOCATE DRAINS AT END OF HEADERS WHICH ARE THE LOWEST POINT OF TREE RING

SPACE DRIP TUBING 12" FROM TRUNK WITH ADDITIONAL TUBING RINGS 18" APART.

1/7/2021 4:49 PM \\SLCFILES\PUBLIC\PROJECTS\JUB\HERRIMAN\83-17-040 CITY STANDARDS MANUAL UPDATE 2017\TEXT\SUBMITTALS\SECTION 6 (COMPLETE)\2020-11-05\IR\IR-DETAILS.DWG

NO.	REVISION DESCRIPTION	D-TE

THIS DOCUMENT -ND -NY ILLUSTR-TIONS HEREON -RE PROVIDED -S ST-ND-RD CONSTRUCTION DET-ILS WITHIN HERRIM-N CITY. DEVI-TION FROM THIS DOCUMENT REQUIRES -PPROV-L OF HERRIM-N CITY. HERRIM-N CITY C-NNOT BE HELD LI-BLE FOR MISUSE OR CH-NGES REG-RDING THIS DOCUMENT.

HERRIMAN CITY

HERRIMAN CITY
ENGINEERING DEPARTMENT
IRRIGATION
DRIP TREE RING - PHASED

IR-12

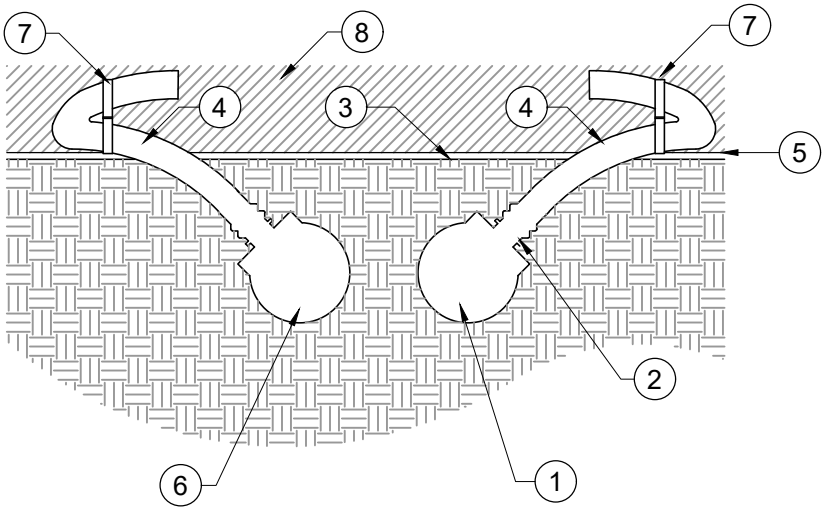

1. 1 ½" PVC SUPPLY HEADER
2. TLIAPVC CONNECTION
3. PLANTING BED FINISHED GRADE
4. DRIPLINE / BLANK TUBING
5. WEED BARRIER FABRIC (IF USED)
6. EXHAUST HEADER
7. NETAFIM FIGURE 8 LINE END ADAPTER – MODEL TLFIG8
8. MULCH – SEE PLANTING PLAN

1/7/2021 4:50 PM \\SLCFILES\PUBLIC\PROJECTS\JUB\HERRIMAN\83-17-040 CITY STANDARDS MANUAL UPDATE 2017\TEXT\SUBMITTALS\SECTION 6 (COMPLETE)\2020-11-05\IR\IR-DETAILS.DWG

NO.	REVISION DESCRIPTION	DATE

THIS DOCUMENT AND ANY ILLUSTRATIONS HEREON ARE PROVIDED AS STANDARD CONSTRUCTION DETAILS WITHIN HERRIMAN CITY. DEVIATION FROM THIS DOCUMENT REQUIRES APPROVAL OF HERRIMAN CITY. HERRIMAN CITY CANNOT BE HELD LIABLE FOR MISUSE OR CHANGES REGARDING THIS DOCUMENT.

HERRIMAN CITY

HERRIMAN CITY
ENGINEERING DEPARTMENT
IRRIGATION
TREE DRIP RING - PHASED SECTION

IR-13

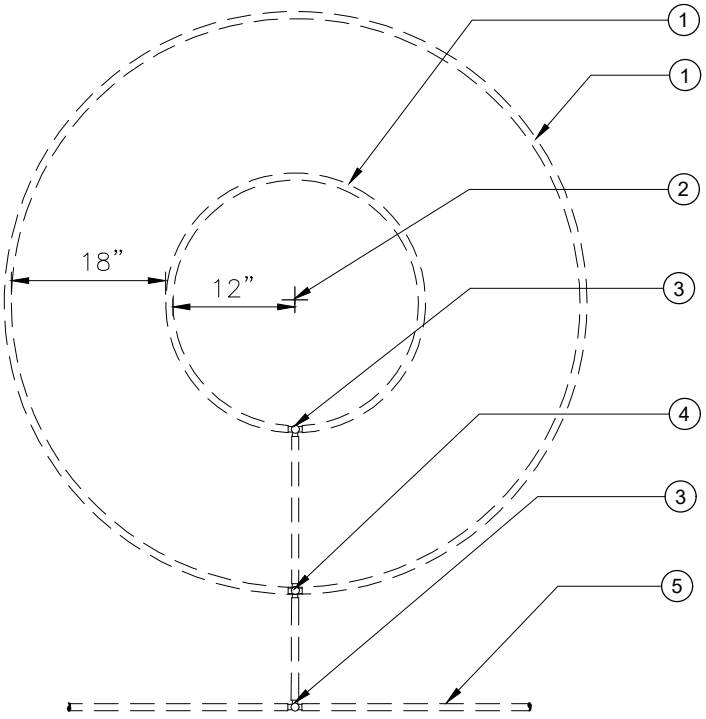

1. NETAFIM DRIPLINE (TYP) TDL-4-12 (18) TREE RING
2. TREE TRUNK
3. INSERT TEE (TYP) MODEL: TLTEE
4. INSERT CROSS (TYP) MODEL: TLCROS
5. NETAFIM DRIPLINE (TYP) TDL-4-12 (18) SHRUB AREA

1/7/2021 4:50 PM \\SLCFILES\PUBLIC\PROJECTS\JUB\HERRIMAN\83-17-040 CITY STANDARDS MANUAL UPDATE 2017\TEXT\SUBMITTALS\SECTION 6 (COMPLETE)\2020-11-05\IR\IR-DETAILS.DWG

NO.	REVISION DESCRIPTION	D-TE

THIS DOCUMENT -ND -NY ILLUSTR-TIONS HEREON -RE PROVIDED -S ST-ND-RD CONSTRUCTION DET-ILS WITHIN HERRIM-N CITY. DEVI-TION FROM THIS DOCUMENT REQUIRES -PPROV-L OF HERRIM-N CITY. HERRIM-N CITY C-NNOT BE HELD LI-BLE FOR MISUSE OR CH-NGES REG-RDING THIS DOCUMENT.

HERRIMAN CITY

HERRIMAN CITY
ENGINEERING DEPARTMENT
IRRIGATION
TREE RING CONNECTED TO SURFACE DRIP

IR-14

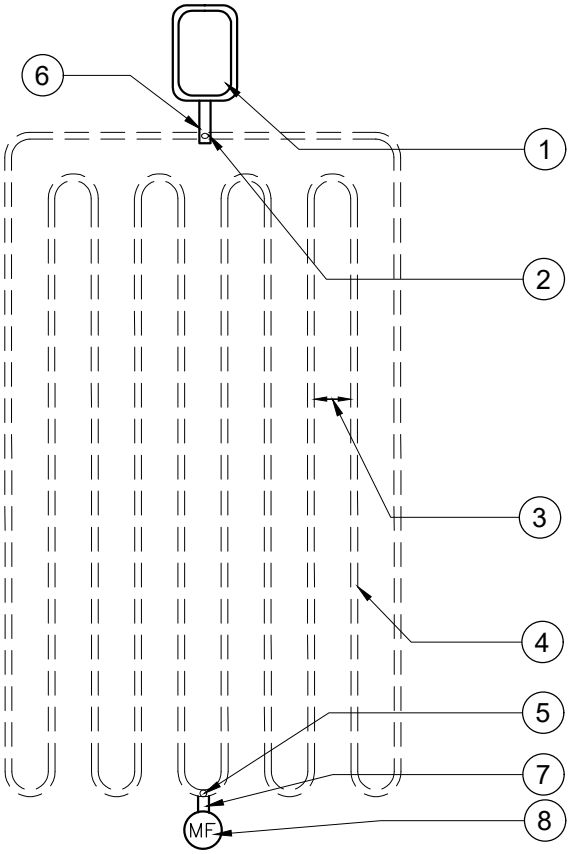

1. REMOTE CONTROL VALVE WITH DISC FILTER AND PRESSURE REGULATING VALVE
2. COMBINATION TEE INS x INS x 3/4" FPT MODEL: TL075FTEE
3. ROW SPACING – PER PLANS (TYP.)
4. TECHLINE CV DRIPLINE (SEE PLANS FOR EMMITER SIZE AND SPACING)
5. INSERT TEE (TYP) MODEL: TLTEE
6. 3/4" PVC THREADED TOE NIPPLE RISER
7. BLANK TECHLINE CV TUBING
8. MANUAL FLUSH VALVE PLUMBED TO TECHLINE CV

1/7/2021 4:50 PM \\SLCFILES\PUBLIC\PROJECTS\JUB\HERRIMAN\83-17-040 CITY STANDARDS MANUAL UPDATE 2017\TEXT\SUBMITTALS\SECTION 6 (COMPLETE)\2020-11-05\IR\IR-DETAILS.DWG

NO.	REVISION DESCRIPTION	DATE

THIS DOCUMENT AND ANY ILLUSTRATIONS HEREON ARE PROVIDED AS STANDARD CONSTRUCTION DETAILS WITHIN HERRIMAN CITY. DEVIATION FROM THIS DOCUMENT REQUIRES APPROVAL OF HERRIMAN CITY. HERRIMAN CITY CANNOT BE HELD LIABLE FOR MISUSE OR CHANGES REGARDING THIS DOCUMENT.

HERRIMAN CITY
ENGINEERING DEPARTMENT
IRRIGATION
SURFACE DRIPLINE LAYOUT

IR-15

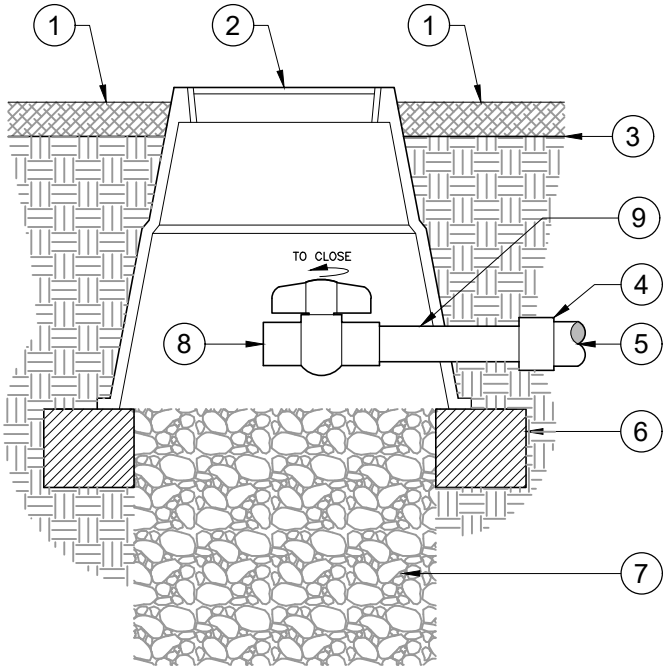

1. PLANTING BED MULCH – SEE PLANTING NOTES FOR DEPTH AND TYPE
2. 8" ROUND GREEN PLASTIC VALVE BOX (CARSON OR APPROVED EQUAL) FLUSH WITH MULCH GRADE
3. FINISHED GRADE
4. PVC REDUCER BUSHING (SP X 1/2") FIPT – SIZE AS REQUIRED
5. PVC EXHAUST HEADER
6. 4"X4" TREATED TIMBER FRAME
7. 1 C.F. 3/4" CRUSHED SEWER GRAVEL
8. PLASTIC PVC BALL VALVE
9. 1/2 X 6 (SCH. 80 PVC) NIPPLE TBE

1/7/2021 4:50 PM \\SLCFILES\PUBLIC\PROJECTS\JUB\HERRIMAN\83-17-040 CITY STANDARDS MANUAL UPDATE 2017\TEXT\SUBMITTALS\SECTION 6 (COMPLETE)\2020-11-05\IR\IR-DETAILS.DWG

NO.	REVISION DESCRIPTION	DATE

THIS DOCUMENT AND ANY ILLUSTRATIONS HEREON ARE PROVIDED AS STANDARD CONSTRUCTION DETAILS WITHIN HERRIMAN CITY. DEVIATION FROM THIS DOCUMENT REQUIRES APPROVAL OF HERRIMAN CITY. HERRIMAN CITY CANNOT BE HELD LIABLE FOR MISUSE OR CHANGES REGARDING THIS DOCUMENT.

HERRIMAN CITY

HERRIMAN CITY
ENGINEERING DEPARTMENT
LANDSCAPE
DRIP FLUSH VALVE (PLUMBED TO PVC HEADER)

IR-16

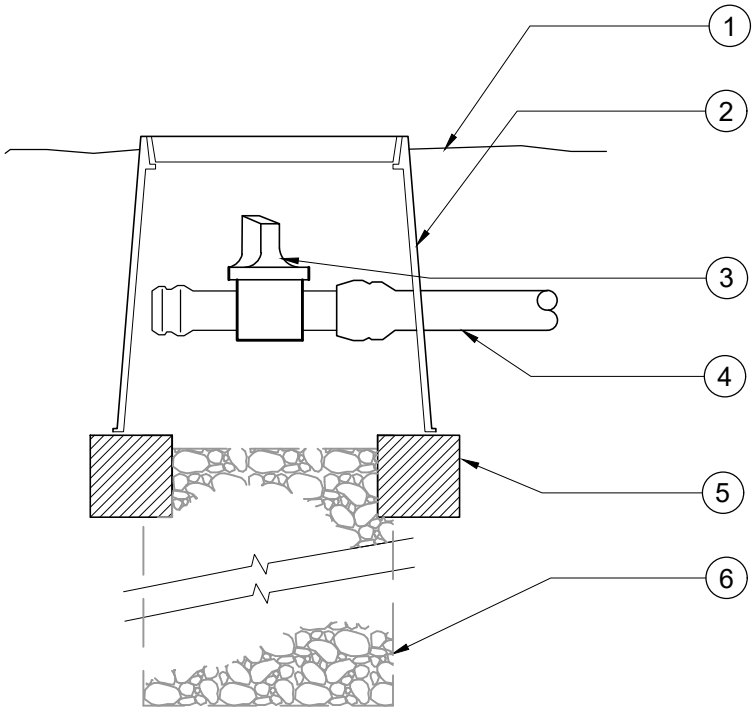

1. FINISH GRADE
2. 8" ROUND GREEN PLASTIC VALVE BOX (CARSON OR APPROVED EQUAL)
3. MANUAL LINE FLUSHING VALVE NETAFIM MODEL: TLSOV
4. TECHLINE CV 17mm TUBING
5. 4"X4" TREATED TIMBER FRAME
6. 1 C.F. 3/4" CRUSHED SEWER ROCK

NO.	REVISION DESCRIPTION	D-TE

THIS DOCUMENT -ND -NY ILLUSTR-TIONS HEREON -RE PROVIDED -S ST-ND-RD CONSTRUCTION DET-ILS WITHIN HERRIM-N CITY. DEVI-TION FROM THIS DOCUMENT REQUIRES -PPROV-L OF HERRIM-N CITY. HERRIM-N CITY C-NNOT BE HELD LI-BLE FOR MISUSE OR CH-NGES REG-RDING THIS DOCUMENT.

HERRIMAN CITY

HERRIMAN CITY
ENGINEERING DEPARTMENT
LANDSCAPE
DRIP FLUSH VALVE (PLUMBED TO DRIPLINE)

IR-17

1/7/2021 4:50 PM \\SLCFILES\PUBLIC\PROJECTS\JUB\HERRIMAN\83-17-040 CITY STANDARDS MANUAL UPDATE 2017\TEXT\SUBMITTALS\SECTION 6 (COMPLETE)\2020-11-05\IR\IR-DETAILS.DWG

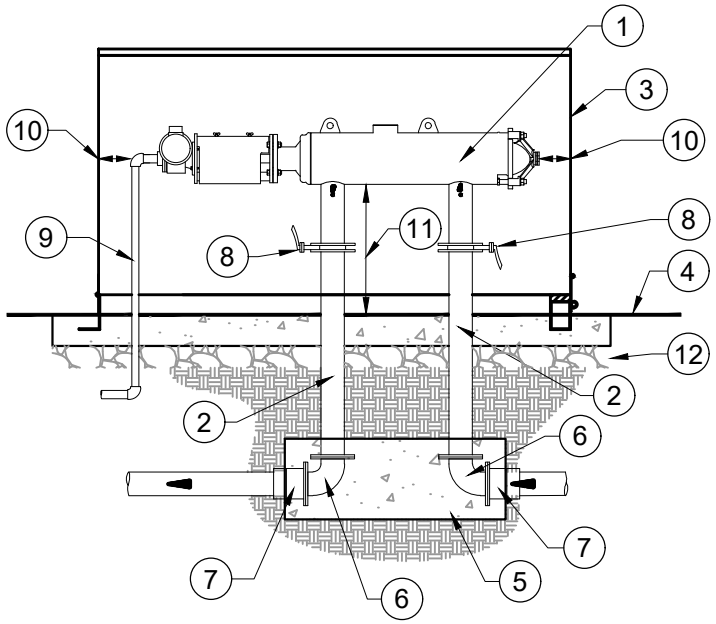

1. INLINE FILTER – SEE IRRIGATION EQUIPMENT SCHEDULE
2. FL X FL DUCTILE IRON SPOOL (LENGTH AS REQUIRED)
3. FILTER ENCLOSURE – SEE IRRIGATION EQUIPMENT SCHEDULE
4. FINISHED GRADE
5. CONCRETE THRUST BLOCK (TYP). WRAP PIPES W/ 10 MIL TAPE. CAST AGAINST UNDISTURBED SOIL.
6. FL X FL DUCTILE IRON 90 DEGREE ELL
7. FL X BELL DUCTILE IRON ADAPTER (SIZE AS REQUIRED)
8. CAST IRON WAFER BUTTERFLY VALVE
9. BACKFLUSH EXHAUST PIPE TO NEAREST STORM DRAIN BOX OR STORMWATER STRUCTURE – DEPENDING ON PROJECT REQUIREMENTS
10. 6" MIN.
11. 12" MIN.
12. 4" UBC COMPACTED TO 95% MDD PER ASTM D–1557

1/7/2021 4:50 PM \\SLCFILES\PUBLIC\PROJECTS\JUB\HERRIMAN\83-17-040 CITY STANDARDS MANUAL UPDATE 2017\TEXT\SUBMITTALS\SECTION 6 (COMPLETE)\2020-11-05\IR\IR-DETAILS.DWG

NO.	REVISION DESCRIPTION	D-TE

THIS DOCUMENT -ND -NY ILLUSTR-TIONS HEREON -RE PROVIDED -S ST-ND-RD CONSTRUCTION DET-ILS WITHIN HERRIM-N CITY. DEVI-TION FROM THIS DOCUMENT REQUIRES -PPROV-L OF HERRIM-N CITY. HERRIM-N CITY C-NNOT BE HELD LI-BLE FOR MISUSE OR CH-NGES REG-RDING THIS DOCUMENT.

HERRIMAN CITY

HERRIMAN CITY
ENGINEERING DEPARTMENT
LANDSCAPE
3" AND LARGER FILTER ASSEMBLY

IR-18

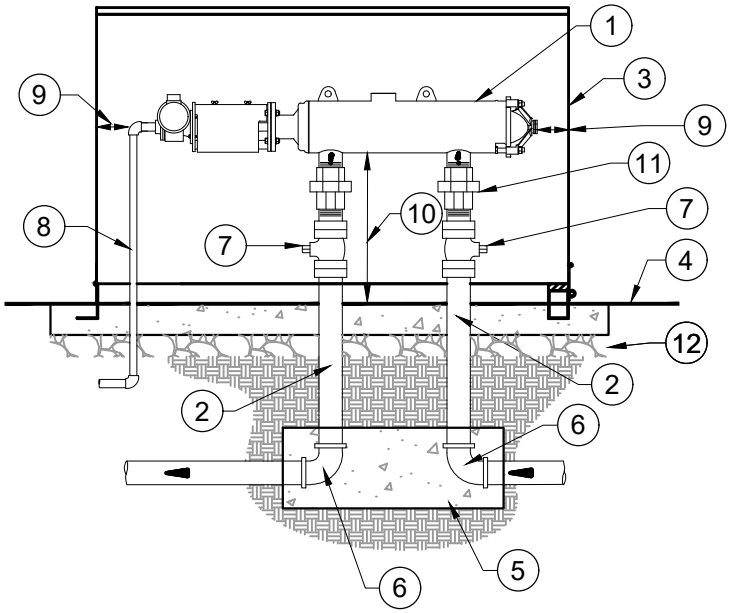

1. INLINE FILTER – SEE IRRIGATION EQUIPMENT SCHEDULE
2. GALVANIZED THREADED NIPPLE (LENGTH AS REQUIRED)
3. FILTER ENCLOSURE – SEE IRRIGATION EQUIPMENT SCHEDULE
4. FINISHED GRADE
5. CONCRETE THRUST BLOCK (TYP). WRAP PIPES W/ 10 MIL TAPE. CAST AGAINST UNDISTURBED SOIL.
6. FEMALE THREADED GALVANIZED 90 DEGREE ELL
7. FULL PORT APOLLO BALL VALVE
8. BACKFLUSH EXHAUST PIPE TO NEAREST STORM DRAIN BOX OR STORMWATER STRUCTURE – DEPENDING ON PROJECT REQUIREMENTS
9. 6" MIN.
10. 12" MIN.
11. THREADED ACTION UNION
12. 4" UBC COMPACTED TO 95% MDD PER ASTM D–1557

1/7/2021 4:50 PM \\SLCFILES\PUBLIC\PROJECTS\JUB\HERRIMAN\83-17-040 CITY STANDARDS MANUAL UPDATE 2017\TEXT\SUBMITTALS\SECTION 6 (COMPLETE)\2020-11-05\IR\IR-DETAILS.DWG

NO.	REVISION DESCRIPTION	D-TE

THIS DOCUMENT -ND -NY ILLUSTR-TIONS HEREON -RE PROVIDED -S ST-ND-RD CONSTRUCTION DET-ILS WITHIN HERRIM-N CITY. DEVI-TION FROM THIS DOCUMENT REQUIRES -PPROV-L OF HERRIM-N CITY. HERRIM-N CITY C-NNOT BE HELD LI-BLE FOR MISUSE OR CH-NGES REG-RDING THIS DOCUMENT.

HERRIMAN CITY

HERRIMAN CITY
ENGINEERING DEPARTMENT
LANDSCAPE
2" AND SMALLER FILTER ASSEMBLY

IR-19

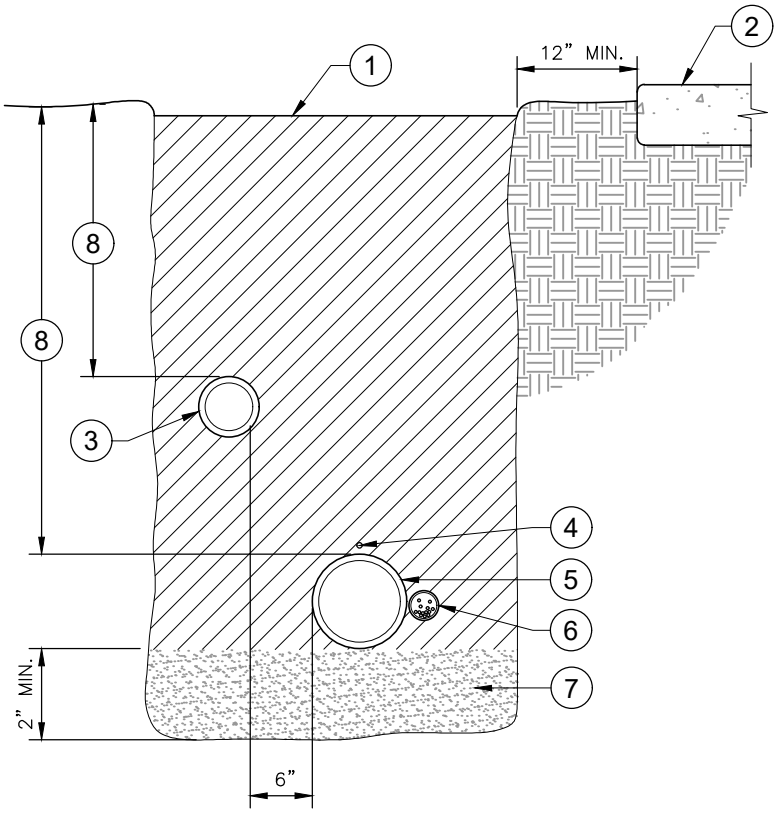

1. BACKFILL MATERIAL – SEE NOTES, COMPACT TO 90% MDD PER ASTM D–1557
2. ADJACENT HARD SURFACE
3. NON–PRESSURE LATERAL LINE
4. MAIN LINE LOCATOR WIRE; BURIED WITH ALL MAIN LINES
5. PVC MAIN LINE
6. DIRECT BURIAL, LOW VOLTAGE CONTROL WIRES; TO BE INSTALLED IN ELECTRICAL CONDUIT. LOCATE DIRECTLY ADJACENT TO MAIN LINE.
7. BEDDING MATERIAL – SEE LANDSCAPE PLANS
8. PIPE DEPTHS – SEE IRRIGATION SPECIFICATIONS

NOTE: SEE SLEEVING DETAIL FOR TRENCHING IN PAVED AREAS.

1/7/2021 4:51 PM \\SLCFILES\PUBLIC\PROJECTS\JUB\HERRIMAN\83-17-040 CITY STANDARDS MANUAL UPDATE 2017\TEXT\SUBMITTALS\SECTION 6 (COMPLETE)\2020-11-05\IR\IR-DETAILS.DWG

NO.	REVISION DESCRIPTION	D-TE

THIS DOCUMENT -ND -NY ILLUSTR-TIONS HEREON -RE PROVIDED -S ST-ND-RD CONSTRUCTION DET-ILS WITHIN HERRIM-N CITY. DEVI-TION FROM THIS DOCUMENT REQUIRES -PPROV-L OF HERRIM-N CITY. HERRIM-N CITY C-NNOT BE HELD LI-BLE FOR MISUSE OR CH-NGES REG-RDING THIS DOCUMENT.

HERRIMAN CITY

HERRIMAN CITY
ENGINEERING DEPARTMENT
LANDSCAPE
TRENCH DETAIL

IR-20

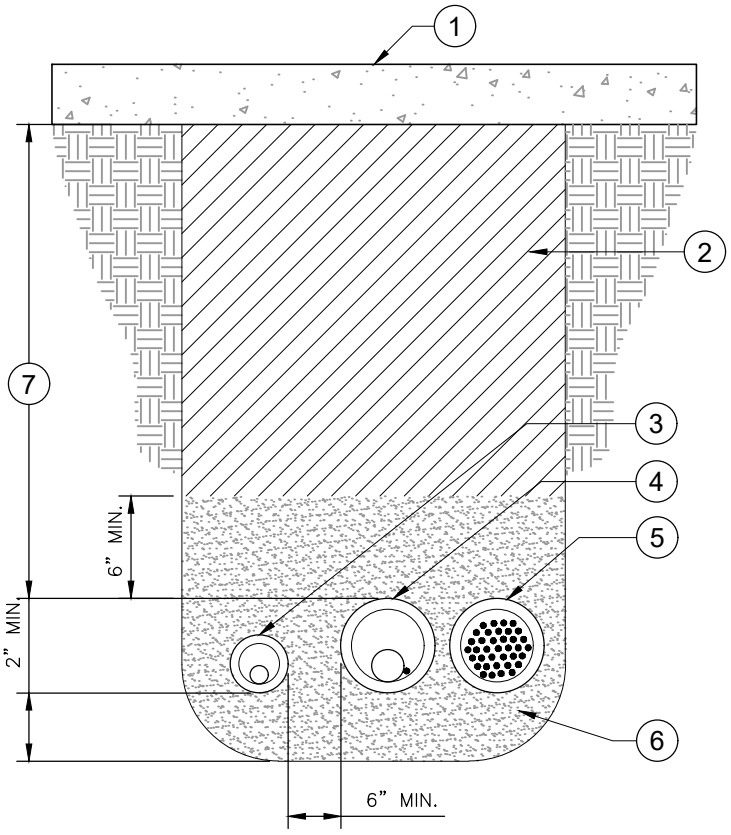

1. HARDSCAPE SURFACE – SEE PLANS
2. BACKFILL MATERIAL – SEE PLANS AND HERRIMAN CITY SPECIFICATIONS
3. LATERAL LINE WITH SLEEVE
4. PVC MAIN LINE AND LOCATOR WIRE WITH SLEEVE
5. CONTROL WIRE SLEEVE – SEE CHART BELOW FOR SIZE
6. BEDDING MATERIAL – SEE NOTES
7. MIN. COVER – 12" UNDER WALKS AND 18" UNDER STREETS

NOTES:

1. SLEEVES 4" AND SMALLER USE PVC SCHEDULE 40 PIPE.
2. SLEEVES LARGER THAN 4" USE PVC CLASS 200.
3. ALL SLEEVES SHALL BE TWO (2) TIMES LARGER THAN THE DIAMETER OF THE PIPE BEING SLEEVED, UNLESS NOTED OTHERWISE ON THE PLANS.
4. INSTALL SLEEVES AT A DEPTH SUFFICIENT TO AVOID CONFLICT WITH OTHER UTILITIES AND MAINS.
5. WIRES SHALL BE IN SEPARTE CONDUIT
6. REFER TO SLEEVING DIAGRAM FOR SIZES OF ALL SLEEVES
7. EXTEND ALL SLEEVING 12" MIN. BEYOND EDGE OF PAVING.

1/7/2021 4:51 PM \\SLCFILES\PUBLIC\PROJECTS\JUB\HERRIMAN\83-17-040 CITY STANDARDS MANUAL UPDATE 2017\TEXT\SUBMITTALS\SECTION 6 (COMPLETE)\2020-11-05\IR\IR-DETAILS.DWG

NO.	REVISION DESCRIPTION	DATE

THIS DOCUMENT AND ANY ILLUSTRATIONS HEREON ARE PROVIDED AS STANDARD CONSTRUCTION DETAILS WITHIN HERRIMAN CITY. DEVIATION FROM THIS DOCUMENT REQUIRES APPROVAL OF HERRIMAN CITY. HERRIMAN CITY CANNOT BE HELD LIABLE FOR MISUSE OR CHANGES REGARDING THIS DOCUMENT.

HERRIMAN CITY

HERRIMAN CITY
ENGINEERING DEPARTMENT
LANDSCAPE
SLEEVE DETAIL

IR-21

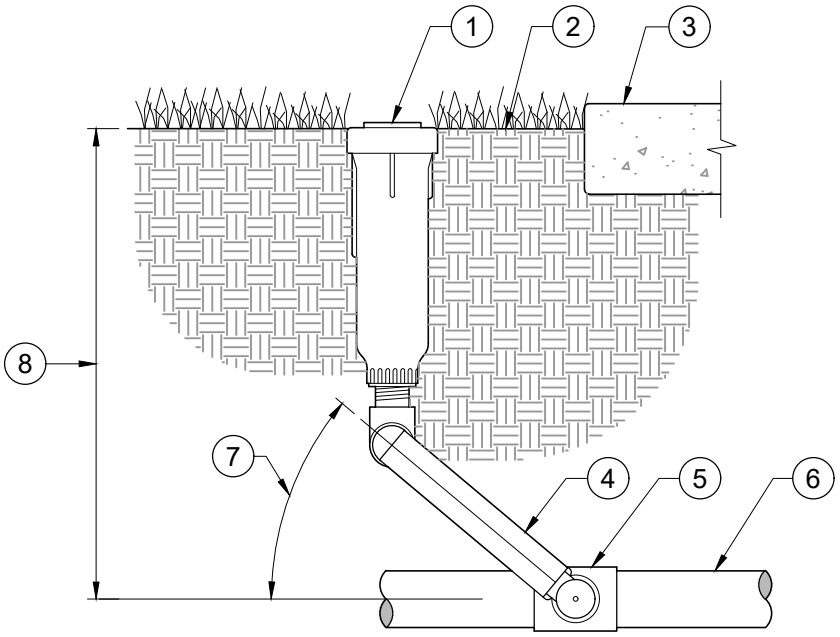

1. POP–UP ROTOR SPRINKLER – SEE IRRIGATION EQUIPMENT SHCEDULE
2. TOP OF SPRINKLER WILL BE FLUSH WITH FINISHED GRADE
3. NOTE: ALL SPRAY HEADS ADJACENT TO HARDSCAPE SHALL BE LOCATED 2" CLEAR OF ALL HARDSCAPE EDGES
4. LASCO UNITIZED SWING JOINT OR SPEARS SWING JOINT RISER ASSEMBLY; MIN. LENGTH – SIZE AS REQUIRED
5. PVC SCHEDULE 40 SXSXT TEE OR ELL
6. PVC LATERAL LINE, SIZE AS NOTED ON PLAN
7. SWING JOINT ARM INSTALLED AT ANGLE BETWEEN 20 AND 45 DEG. OF LATERAL PIPE
8. DEPTH – SEE NOTES AND TRENCH DETAIL

1/7/2021 4:51 PM \\SLCFILES\PUBLIC\PROJECTS\JUB\HERRIMAN\83-17-040 CITY STANDARDS MANUAL UPDATE 2017\TEXT\SUBMITTALS\SECTION 6 (COMPLETE)\2020-11-05\IR\IR-DETAILS.DWG

NO.	REVISION DESCRIPTION	D-TE

THIS DOCUMENT -ND -NY ILLUSTR-TIONS HEREON -RE PROVIDED -S ST-ND-RD CONSTRUCTION DET-ILS WITHIN HERRIM-N CITY. DEVI-TION FROM THIS DOCUMENT REQUIRES -PPROV-L OF HERRIM-N CITY. HERRIM-N CITY C-NNOT BE HELD LI-BLE FOR MISUSE OR CH-NGES REG-RDING THIS DOCUMENT.

HERRIMAN CITY

HERRIMAN CITY
ENGINEERING DEPARTMENT
LANDSCAPE
POP-UP GEAR DRIVE ROTOR SPRINKLER

IR-22

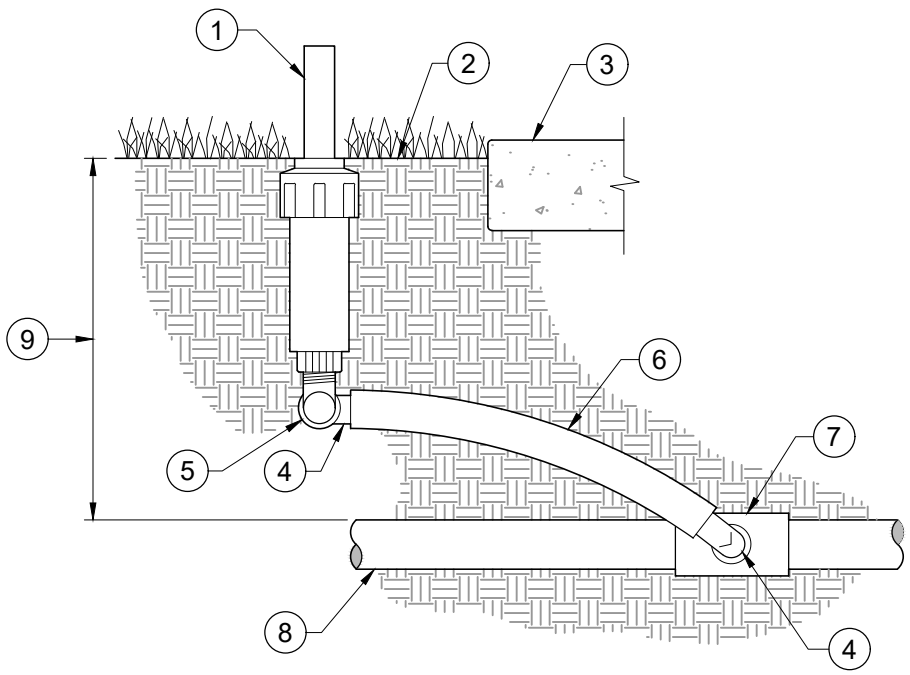

1. POP–UP SPRAY HEAD – SEE IRRIGATION EQUIPMENT SCHEDULE
2. TOP OF SPRINKLER WILL BE FLUSH WITH FINISHED GRADE
3. NOTE: ALL SPRAY HEADS ADJACENT TO HARDSCAPE SHALL BE LOCATED 2" CLEAR OF ALL HARDSCAPE EDGES
4. SWING PIPE ELL WITH SPIRAL BARB FITTING (TYP.)
5. MARLEX STREET ELL
6. FLEXIBLE SWING PIPE, 12" MIN., 36" MAX. LENGTH
7. PVC SCHEDULE 40 S X S X T TEE (OR ELL)
8. PVC LATERAL LINE, SIZE AS NOTED ON PLAN
9. DEPTH – SEE NOTES AND TRENCH DETAIL

1/7/2021 4:51 PM \\SLCFILES\PUBLIC\PROJECTS\JUB\HERRIMAN\83-17-040 CITY STANDARDS MANUAL UPDATE 2017\TEXT\SUBMITTALS\SECTION 6 (COMPLETE)\2020-11-05\IR\IR-DETAILS.DWG

NO.	REVISION DESCRIPTION	D-TE

THIS DOCUMENT -ND -NY ILLUSTR-TIONS HEREON -RE PROVIDED -S ST-ND-RD CONSTRUCTION DET-ILS WITHIN HERRIM-N CITY. DEVI-TION FROM THIS DOCUMENT REQUIRES -PPROV-L OF HERRIM-N CITY. HERRIM-N CITY C-NNOT BE HELD LI-BLE FOR MISUSE OR CH-NGES REG-RDING THIS DOCUMENT.

HERRIMAN CITY

HERRIMAN CITY
ENGINEERING DEPARTMENT
LANDSCAPE
POP-UP SPRAY/ROTARY SPRINKLER

IR-23

NOTE:

SPACING SHOWN IS FOR 5' MOW STRIP. VARY SPACING ACCORDINGLY FOR OTHER STREETSCAPE WIDTHS.

S NEW RAINBIRD SST–PC POP–UP SPRAY HEAD

E NEW RAINBIRD EST–PC POP–UP SPRAY HEAD

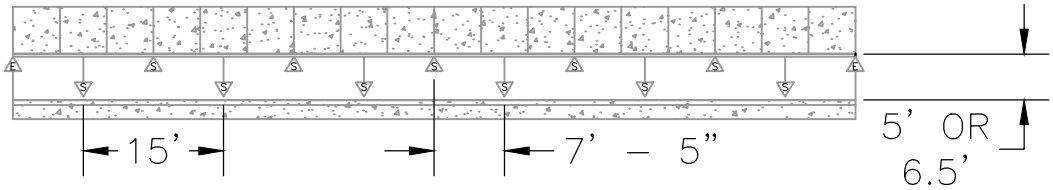

NOTES:

1. HEADS ALTERNATING TO FORM TRIANGLE SPACING.
2. DRAWING NOT TO SCALE.
3. MAIN LINE AND LATERALS ARE TO BE LOCATED ON SIDEWALK SIDE OF PARK STRIP.

NO.	REVISION DESCRIPTION	D-TE

THIS DOCUMENT -ND -NY ILLUSTR-TIONS HEREON -RE PROVIDED -S ST-ND-RD CONSTRUCTION DET-ILS WITHIN HERRIM-N CITY. DEVI-TION FROM THIS DOCUMENT REQUIRES -PPROV-L OF HERRIM-N CITY. HERRIM-N CITY C-NNOT BE HELD LI-BLE FOR MISUSE OR CH-NGES REG-RDING THIS DOCUMENT.

HERRIMAN CITY

HERRIMAN CITY
ENGINEERING DEPARTMENT
LANDSCAPE
TYPICAL STREETSCAPE HEAD PATTERN

IR-24

1/7/2021 4:51 PM \\SLCFILES\PUBLIC\PROJECTS\JUB\HERRIMAN\83-17-040 CITY STANDARDS MANUAL UPDATE 2017\TEXT\SUBMITTALS\SECTION 6 (COMPLETE)\2020-11-05\IR\IR-DETAILS.DWG

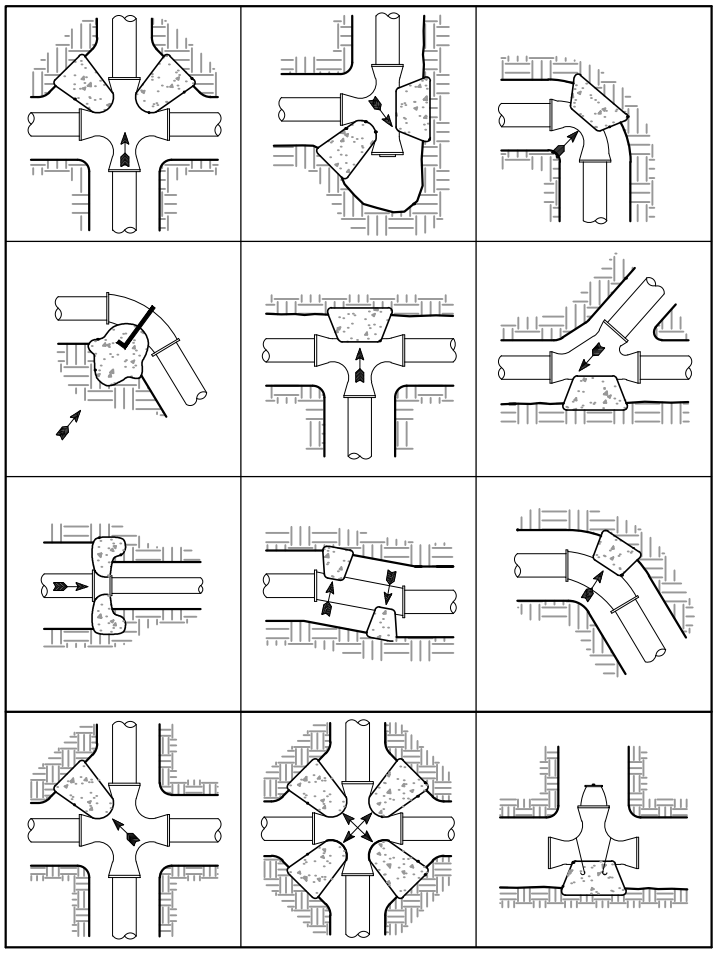

DETAIL NOTES:

1. FIGURE (100%) AT THRUST BLOCK INDICATES PERCENT OF TOTAL THRUST TO BE APPLIED FOR BEARING AREA OF 2,000 P.S.F.
2. ARROW (➡) INDICATES THRUST DIRECTION.
3. CONCRETE FOR THRUST BLOCKS TO BE 2,000 P.S.I.
4. ALL MJ AND FLANGED FITTINGS TO BE WRAPPED WITH POLYETHYLENE WRAP PRIOR TO POURING THRUST BLOCK.
5. CONTROL WIRE SHALL BE KEPT OUT OF THE CONCRETE THRUST BLOCKS.
6. ALL MAIN LINE FITTINGS THREE (3") INCHES AND LARGER, WHETHER DUCTILE IRON OR SOLVENT WELD, SHALL BE THRUST BLOCKED.

MINIMUM BEARING AREA IN SQ. FT.					
PIPE SIZE	DEAD END OR TEE	90° ELBOW	45° ELBOW	22 ½° ELBOW	11 ¼° ELBOW
3	2	3	2	2	2
4	2	3	2	2	2
6	4	5.5	3	2.5	2
8	6.5	9.5	5	2.75	2.5
12	14	20	11	5.5	3

NOTE: RESTRAINT SIZING IS BASED UPON A MAXIMUM OPERATING PRESSURE OF 150 PSI AND A TEST PRESSURE OF 200 PSI, AND A MINIMUM SOIL BEARING STRENGTH OF 2,000 PSF. OPERATING PRESSURES IN EXCESS OF 150 OR SOILS WITH LESS THAN 2,000 POUND BEARING STRENGTH WILL REQUIRE SPECIAL DESIGN.

1/7/2021 4:51 PM \\SLCFILES\PUBLIC\PROJECTS\JUB\HERRIMAN\83-17-040 CITY STANDARDS MANUAL UPDATE 2017\TEXT\SUBMITTALS\SECTION 6 (COMPLETE)\2020-11-05\IR\IR-DETAILS.DWG

NO.	REVISION DESCRIPTION	D-TE

THIS DOCUMENT -ND -NY ILLUSTR-TIONS HEREON -RE PROVIDED -S ST-ND-RD CONSTRUCTION DET-ILS WITHIN HERRIM-N CITY. DEVI-TION FROM THIS DOCUMENT REQUIRES -PPROV-L OF HERRIM-N CITY. HERRIM-N CITY C-NNOT BE HELD LI-BLE FOR MISUSE OR CH-NGES REG-RDING THIS DOCUMENT.

HERRIMAN CITY

HERRIMAN CITY
ENGINEERING DEPARTMENT
LANDSCAPE
THRUST BLOCK DETAIL

IR-25

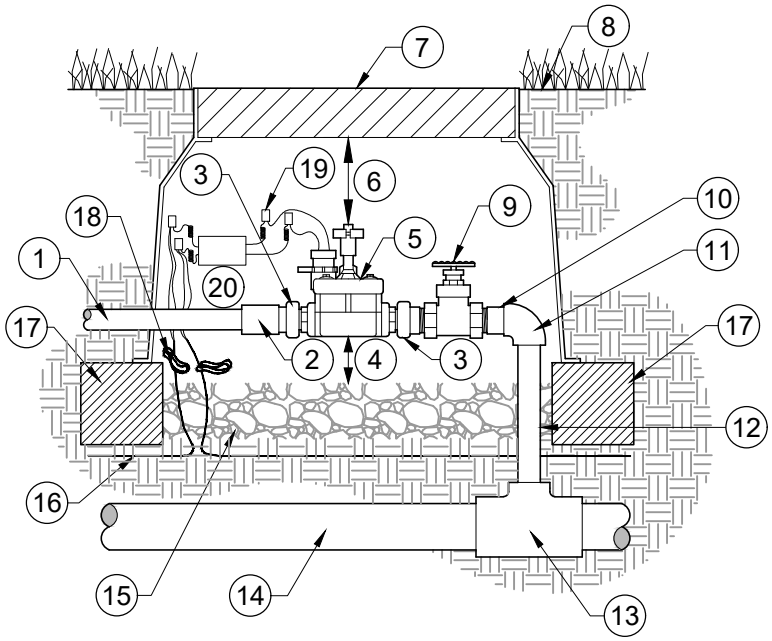

NOTE:
1. ONLY ONE VALVE PER BOX.
2. PLACE BOXES A MINIMUM OF 2' APART.
3. USE BOX EXTENSIONS AS REQUIRED.

(1) PVC LATERAL LINE

(2) SCHEDULE 80 THREADED UNION

(3) ACTION UNION – PART PART 18010–XX, PART 18011–XX, PART 18012–XX

(4) 2" MIN. CLEARANCE

(5) REMOTE CONTROL VALVE – SEE IRRIGATION EQUIPMENT SCHEDULE

(6) 3" MIN. 6" MAX. CLEARANCE

(7) PLASTIC VALVE BOX W/ BOLT LOCK (CARSON OR APPROVED EQUAL) SIZE AS PER VALVE SIZE: 1" VLAVE = 18" STANDARD BOX; 1 1/2" – 2" VALVE = 18" JUMBO BOX

(8) FINISHED GRADE

(9) BRASS RESILIENT SEATED WEDGE GATE VALVE (MILWAUKEE OR APPROVED AMERICAN MADE BRASS) WITH HANDWHEEL AND NON–RISING STEM

(10) PVC TOE NIPPLE

(11) PVC SCHEDULE 80 ELL

(12) PVC SCHEDULE 80 PIPE, SOLVENT WELDED – LENGTH AS REQUIRED

(13) PVC SCHEDULE 80 TEE (OR ELL OR DUCTILE IRON SERVICE TEE)

(14) PVC MAIN LINE

(15) 4" MIN. PEA GRAVEL

(16) WIRES TO CONTROLLER; INSTALL IN CONDUIT – SEE TRENCH DETAIL. USE SWEEP ELLS TO BRING WIRES TO VALVE BOX

(17) 4"X4" TREATED TIMBER FRAME

(18) PROVIDE 24" EXPANSION LOOP AT EACH WIRE CONNECTOR IN VALVE BOX

(19) 3M DBR/Y ELECTRIC CONTROL WIRE CONNECTORS (TYP.)

(20) DECODER – SEE IRRIGATION EQUIPMENT SCHEDULE

NO.	REVISION DESCRIPTION	D-TE

THIS DOCUMENT -ND -NY ILLUSTR-TIONS HEREON -RE PROVIDED -S ST-ND-RD CONSTRUCTION DET-ILS WITHIN HERRIM-N CITY. DEVI-TION FROM THIS DOCUMENT REQUIRES -PPROV-L OF HERRIM-N CITY. HERRIM-N CITY C-NNOT BE HELD LI-BLE FOR MISUSE OR CH-NGES REG-RDING THIS DOCUMENT.

HERRIMAN CITY

HERRIMAN CITY
ENGINEERING DEPARTMENT
LANDSCAPE
2-WIRE CONTROL VALVE ASSEMBLY

IR-26

1/7/2021 4:52 PM \\SLCFILES\PUBLIC\PROJECTS\JUB\HERRIMAN\83-17-040 CITY STANDARDS MANUAL UPDATE 2017\TEXT\SUBMITTALS\SECTION 6 (COMPLETE)\2020-11-05\IR\IR-DETAILS.DWG

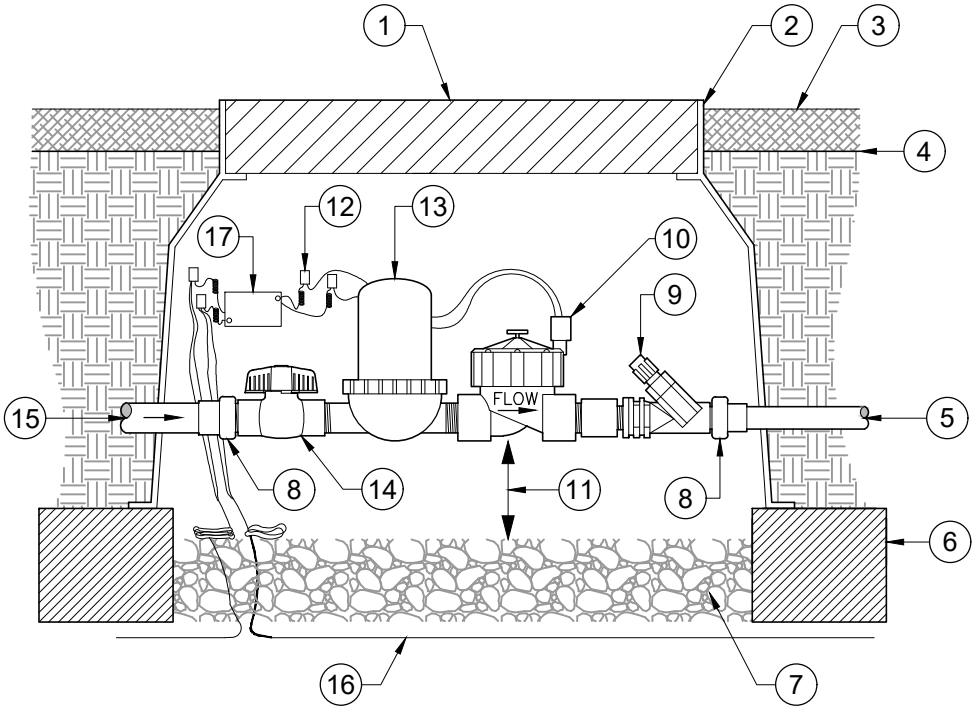

1. 18" JUMBO GREEN PLASTIC VALVE BOX W/ BOLT LOCK (CARSON OR APPROVED EQUAL)
2. 1" MAX. CLEARANCE
3. PLANTING BED MULCH – SEE PLANTING SPECIFICATIONS AND PLANS FOR DEPTH AND TYPE
4. FINISHED GRADE
5. PVC SUPPLY HEADER
6. 4"X4" TREATED TIMBER FRAME
7. 4" MIN. PEA GRAVEL
8. THREADED ACTION UNION (TYP.)
9. INLINE PRESSURE REGULATOR
10. ELECTRIC CONTROL VALVE – SEE IRRIGATION EQUIPMENT SCHEDULE
11. 2" MIN. CLEARANCE
12. (4) 3M DBR/Y WATER TIGHT WIRE CONNECTORS
13. INLINE 1" FILTER
14. PLASTIC PVC BALL VALVE
15. FLOW FROM PVC MAIN LINE
16. TWO–WIRE CONTROL WIRE; INSTALL IN CONDUIT – SEE TRENCH DETAIL. USE SWEEP ELLS TO BRING WIRE INTO VALVE BOX
17. DECODER – SEE IRRIGATION EQUIPMENT SCHEDULE

\\SLCFILES\PUBLIC\PROJECTS\JUB\HERRIMAN\83-17-040 CITY STANDARDS MANUAL UPDATE 2017\TEXT\SUBMITTALS\SECTION 6 (COMPLETE)\2020-11-05\IR\IR-DETAILS.DWG
1/7/2021 4:52 PM

NO.	REVISION DESCRIPTION	DATE

THIS DOCUMENT AND ANY ILLUSTRATIONS HEREON ARE PROVIDED AS STANDARD CONSTRUCTION DETAILS WITHIN HERRIMAN CITY. DEVIATION FROM THIS DOCUMENT REQUIRES APPROVAL OF HERRIMAN CITY. HERRIMAN CITY CANNOT BE HELD LIABLE FOR MISUSE OR CHANGES REGARDING THIS DOCUMENT.

HERRIMAN CITY

HERRIMAN CITY
ENGINEERING DEPARTMENT
LANDSCAPE
2- WIRE DRIP ZONE REMOTE CONTROL VALVE

IR-27

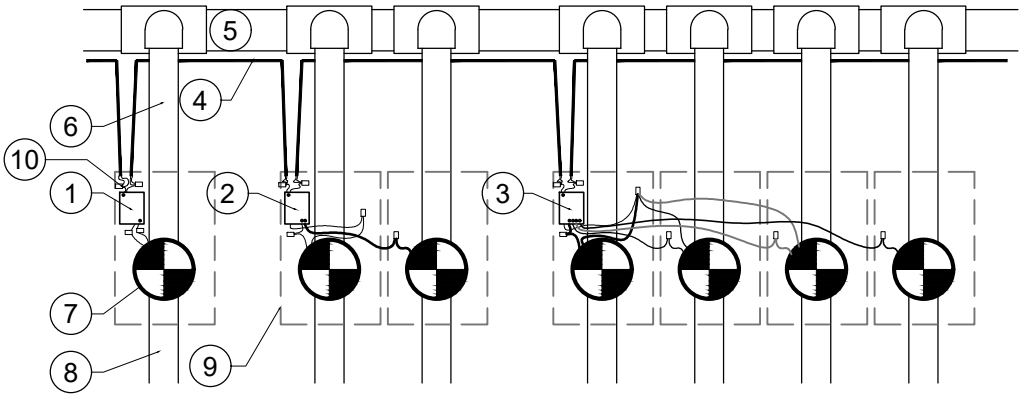

NOTES:
VALVE BOXES SHALL HAVE A MINIMUM SPACING OF 2'. INSTALL DECODERS PER MANUFACTURE'S RECOMMENDATIONS.

1. SINGLE (1) VALVE DECODER – SEE IRRIGATION EQUIPMENT SCHEDULE
2. DOUBLE (2) VALVE DECODER – SEE IRRIGATION EQUIPMENT SCHEDULE
3. QUADRUPLE (4) VALVE DECODER – SEE IRRIGATION EQUIPMENT SCHEDULE
4. TWO WIRE COMMUNICATION WIRE TO CONTROLLER
5. MAIN LINE
6. MAIN LINE STUB TO CONTROL VALVE
7. CONTROL VALVE – SEE IRRIGATION EQUIPMENT SCHEDULE AND CONTROL VALVE DETAIL
8. LATERAL TO HEADS
9. VALVE BOX – SEE CONTROL VALVE DETAIL
10. 3M DBR/Y WATER TIGHT WIRE CONNECTORS (TYP.)

1/7/2021 4:52 PM \\SLCFILES\PUBLIC\PROJECTS\JUB\HERRIMAN\83-17-040 CITY STANDARDS MANUAL UPDATE 2017\TEXT\SUBMITTALS\SECTION 6 (COMPLETE)\2020-11-05\IR\IR-DETAILS.DWG

NO.	REVISION DESCRIPTION	D-TE

THIS DOCUMENT -ND -NY ILLUSTR-TIONS HEREON -RE PROVIDED -S ST-ND-RD CONSTRUCTION DET-ILS WITHIN HERRIM-N CITY. DEVI-TION FROM THIS DOCUMENT REQUIRES -PPROV-L OF HERRIM-N CITY. HERRIM-N CITY C-NNOT BE HELD LI-BLE FOR MISUSE OR CH-NGES REG-RDING THIS DOCUMENT.

HERRIMAN CITY

HERRIMAN CITY
ENGINEERING DEPARTMENT
LANDSCAPE
2-WIRE DECODER DIAGRAM

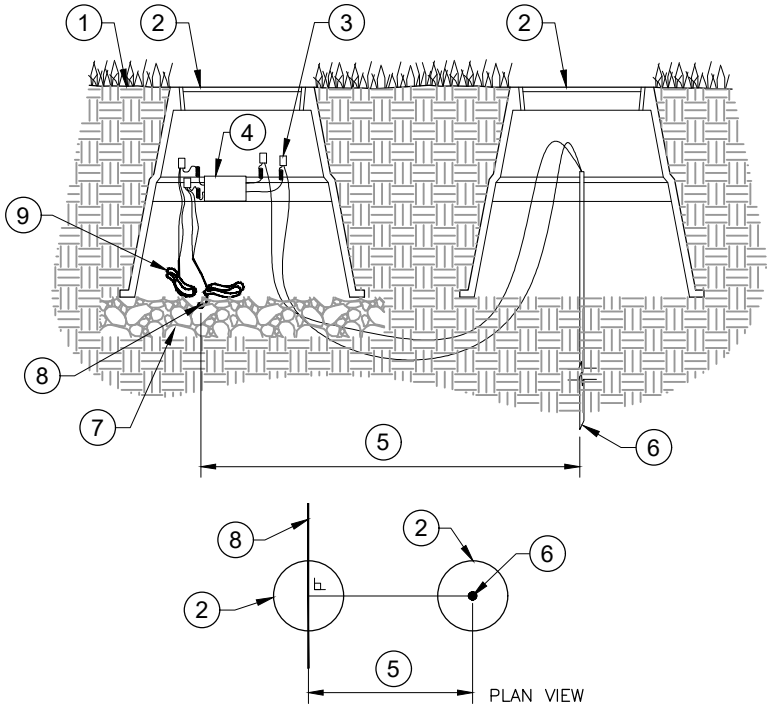

1. FINISHED GRADE
2. 8" ROUND GREEN PLASTIC VALVE BOX WITH BOLT LOCK (CARSON OR APPROVED EQUAL)
3. 3M DBR/Y ELECTRIC CONTROL WIRE CONNECTORS (TYP.)
4. DECODER – SEE IRRIGATION EQUIPMENT SCHEDULE
5. MIN. 10' FROM TWO–WIRE
6. 5/8" DIA. X 8' LENGTH COPPER GROUND ROD
7. 4" MIN. PEA GRAVEL
8. TWO WIRE TO CONTROLLER
9. 24" MIN. EXPANSION LOOP AT EACH WIRE SPLICE ON TWO WIRE

\\SLCFILES\PUBLIC\PROJECTS\JUB\HERRIMAN\83-17-040 CITY STANDARDS MANUAL UPDATE 2017\TEXT\SUBMITTALS\SECTION 6 (COMPLETE)\2020-11-05\IR\IR-DETAILS.DWG
1/7/2021 4:52 PM

NO.	REVISION DESCRIPTION	DATE

THIS DOCUMENT AND ANY ILLUSTRATIONS HEREON ARE PROVIDED AS STANDARD CONSTRUCTION DETAILS WITHIN HERRIMAN CITY. DEVIATION FROM THIS DOCUMENT REQUIRES APPROVAL OF HERRIMAN CITY. HERRIMAN CITY CANNOT BE HELD LIABLE FOR MISUSE OR CHANGES REGARDING THIS DOCUMENT.

HERRIMAN CITY

HERRIMAN CITY
ENGINEERING DEPARTMENT
LANDSCAPE
GROUND RODS FOR TWO WIRE SYSTEM

IR-29

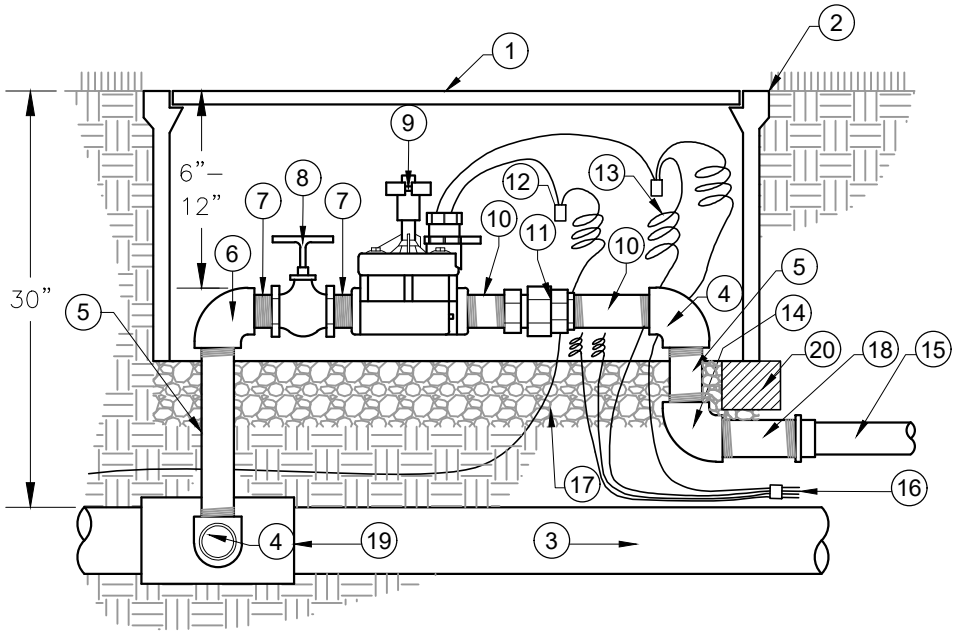

NOTE:

1. ONLY ONE VALVE PER BOX.
2. PLACE BOXES A MINIMUM OF 2' APART.
3. USE BOX EXTENSIONS AS REQUIRED.
4. ALL FITTINGS AND NIPPLES IN MANIFOLD SHALL BE SCHEDULE 80 THREADED PVC USING TEFLON TAPE AND #5 RECTOR SEAL.
5. VALVE MANIFOLD TO BE INSTALLED PERPENDICULAR (90 DEGREES) TO MAIN LINE. MIN. OF 1' BEFORE CHANGE IN DIRECTION.

(1) CARSON–BROOKS 1419–12 STANDARD OR JUMBO VALVE BOX WITH STAINLESS STEEL BOLTS. (BOLT DOWN LID). (MUST BE APPROVED BY LANDSCAPE ARCHITECT PRIOR TO INSTALLATION)

(2) INSTALL AT GRADE

(3) MAIN WATER SUPPLY LINE

(4) PVC SCHEDULE 80 T X T ELBOW

(5) PVC SCHEDULE 80 NIPPLE; LENGTH AS REQUIRED (TYP.)

(6) PVC SCHEDULE 80 T X T ELBOW SAME SIZE AS VALVE

(7) PVC SCHEDULE 80 NIPPLE ON EITHER SIDE OF GATE VALVE

(8) BRASS GATE VALVE WITH NON RISING STEM (LINE SIZE)

(9) ELECTRIC CONTROL VALVE – SEE EQUIPMENT SCHEDULE

(10) SCHEDULE 80 NIPPLE ON EITHER SIDE OF THE UNION

(11) PVC SCHEDULE 80 UNION

(12) WATER TIGHT CONNECTORS (3M DBR/Y ONLY)

(13) PROVIDE 18" EXPANSION LOOP AT EACH WIRE CONNECTOR IN BOX

(14) SCHEDULE 80 ELBOW WITH SCHEDULE 80 NIPPLE INTO T X T BUSHING TO LATERAL

(15) LATERAL LINE

(16) CONTROL WIRES & SPARE WIRES, IN STALL IN CONDUIT – SEE TRENCH DETAIL. USE SWEEP ELLS TO BRING WIRE INTO VALVE BOX.

(17) 6" MIN. DEPTH CLEAN PEA GRAVEL

(18) THREADED NIPPLE WITH BUSHING OR FEMALE ADAPTER

(19) PVC SCHEDULE 80 TEE 5 X 5 X 5 WITH SCHEDULE 80 SXT BUSHING OR DOUBLE STRAP SADDLE OR HARCO SERVICE TEE

(20) 4"X4" TREATED TIMBER FRAME

NO.	REVISION DESCRIPTION	D-TE

THIS DOCUMENT -ND -NY ILLUSTR-TIONS HEREON -RE PROVIDED -S ST-ND-RD CONSTRUCTION DET-ILS WITHIN HERRIM-N CITY. DEVI-TION FROM THIS DOCUMENT REQUIRES -PPROV-L OF HERRIM-N CITY. HERRIM-N CITY C-NNOT BE HELD LI-BLE FOR MISUSE OR CH-NGES REG-RDING THIS DOCUMENT.

HERRIMAN CITY

HERRIMAN CITY
ENGINEERING DEPARTMENT
LANDSCAPE
CONTROL VALVE ASSEMBLY

IR-30

1/7/2021 4:52 PM \\SLCFILES\PUBLIC\PROJECTS\JUB\HERRIMAN\83-17-040 CITY STANDARDS MANUAL UPDATE 2017\TEXT\SUBMITTALS\SECTION 6 (COMPLETE)\2020-11-05\IR\IR-DETAILS.DWG

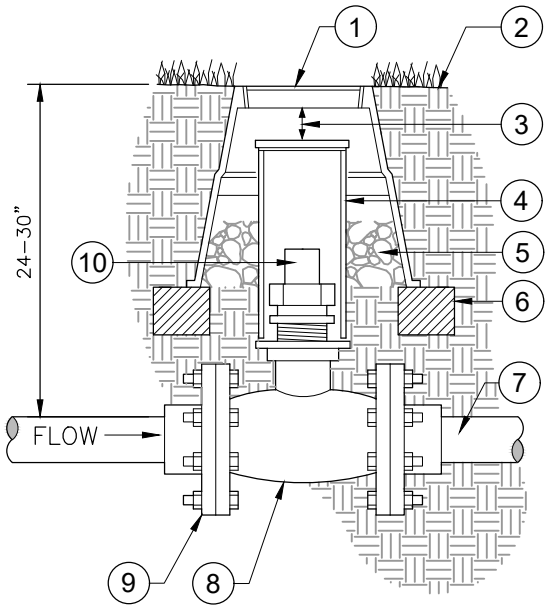

1. 10" ROUND PLASTIC VALVE BOX W/ BOLT LOCK (CARSON OR APPROVED EQUAL, MARKED "G.V." IN 2" WHITE LETTERS)
2. FINISHED GRADE
3. 3" MIN. CLEARANCE
4. 4" PVC SCHEDULE 40 PIPE SLEEVE (NOTCH TO FIT PIPE), CAPPED BY GREEN CAM LOCK SNUG CAP
5. 3"–4" DEPTH CLEAN PEA GRAVEL
6. 4"X4" TREATED TIMBER FRAME
7. PVC MAIN LINE
8. FLANGED GATE VALVE – SEE IRRIGATION EQUIPMENT SCHEDULE
9. PVC FLANGE ADAPTOR (TYP.)
10. 2" SQUARE OPERATING NUT

\\SLCFILES\PUBLIC\PROJECTS\JUB\HERRIMAN\83-17-040 CITY STANDARDS MANUAL UPDATE 2017\TEXT\SUBMITTALS\SECTION 6 (COMPLETE)\2020-11-05\IR\IR-DETAILS.DWG
1/7/2021 4:52 PM

NO.	REVISION DESCRIPTION	DATE

THIS DOCUMENT AND ANY ILLUSTRATIONS HEREON ARE PROVIDED AS STANDARD CONSTRUCTION DETAILS WITHIN HERRIMAN CITY. DEVIATION FROM THIS DOCUMENT REQUIRES APPROVAL OF HERRIMAN CITY. HERRIMAN CITY CANNOT BE HELD LIABLE FOR MISUSE OR CHANGES REGARDING THIS DOCUMENT.

HERRIMAN CITY

HERRIMAN CITY
ENGINEERING DEPARTMENT
LANDSCAPE
ISOLATION GATE VALVE (FLANGED 3" & LARGER)

IR-31

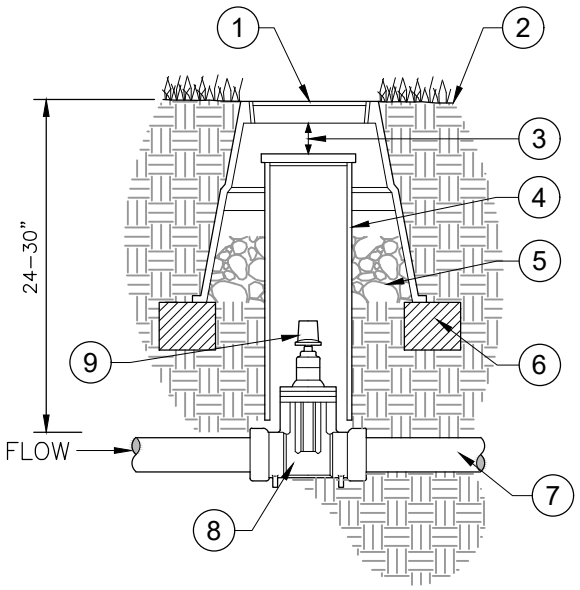

1. 10" ROUND PLASTIC VALVE BOX W/ BOLT LOCK (CARSON OR APPROVED EQUAL MARKED "G.V." IN 2" WHITE LETTERS).
2. FINISHED GRADE
3. 3" MIN. CLEARANCE
4. 4" PVC SCHEDULE 40 PIPE SLEEVE (NOTCH TO FIT PIPE), CAPPED BY CAM LOCK SNUG CAP
5. 3"–4" DEPTH CLEAN PEA GRAVEL
6. 4"X4" TREATED TIMBER FRAME
7. PVC MAIN LINE
8. GATE VALVE – SEE IRRIGATION EQUIPMENT SCHEDULE
9. 2" SQUARE OPERATING NUT

NO.	REVISION DESCRIPTION	DATE

THIS DOCUMENT AND ANY ILLUSTRATIONS HEREON ARE PROVIDED AS STANDARD CONSTRUCTION DETAILS WITHIN HERRIMAN CITY. DEVIATION FROM THIS DOCUMENT REQUIRES APPROVAL OF HERRIMAN CITY. HERRIMAN CITY CANNOT BE HELD LIABLE FOR MISUSE OR CHANGES REGARDING THIS DOCUMENT.

HERRIMAN CITY

HERRIMAN CITY
ENGINEERING DEPARTMENT
LANDSCAPE
ISOLATION GATE VALVE (PUSH-ON; 2")

IR-32

1/7/2021 4:53 PM \\SLCFILES\PUBLIC\PROJECTS\JUB\HERRIMAN\83-17-040 CITY STANDARDS MANUAL UPDATE 2017\TEXT\SUBMITTALS\SECTION 6 (COMPLETE)\2020-11-05\IR\IR-DETAILS.DWG

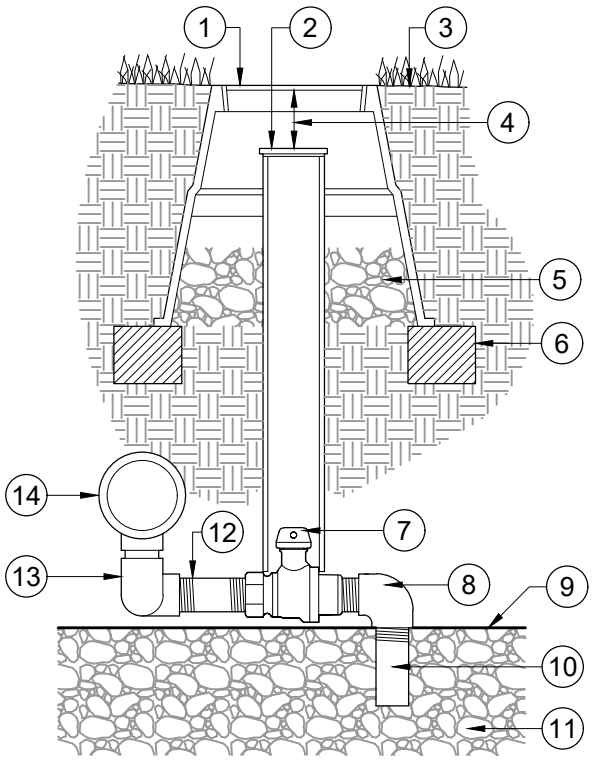

1. 10" ROUND GREEN PLASTIC VALVE BOX WITH BOLT LOCK (CARSON OR APPROVED EQUAL)
2. 4" PVC SCHEDULE 40 PIPE SLEEVE (NOTCH TO FIT PIPE), CAPPED BY YELLOW CAM LOCK SNUG CAP
3. FINISHED GRADE
4. 3" MIN. 6" MAX. CLEARANCE
5. 4" MIN. PEA GRAVEL
6. 4"X4" TREATED TIMBER FRAME
7. 3/4" VALVE – SEE IRRIGATION EQUIPMENT SCHEDULE
8. 3/4" 90 DEGREE STREET ELL
9. FILTER FABRIC COVERING SUMP
10. 3/4" X 6" PVC SCHEDULE 80 TOE NIPPLE
11. 3/4" CRUSHED SEWER ROCK – 6 C.F. MIN. SIZE
12. 3/4" X 12" PVC SCHEDULE 80 NIPPLE
13. (2) FIPT X FIPT 90 DEGREE ELL, (2) 3/4" X CLOSE PVC NIPPLE
14. PVC MAIN LINE AND SERVICE TEE

NOTE: MAIN LINE SHALL GRAVITY DRAIN TO MANUAL DRAIN VALVE. MANUAL DRAIN VALVE SHALL BE PLACED IN ALL LOW SPOTS AND WHERE SHOWN ON THE PLAN.

1/7/2021 4:53 PM \\SLCFILES\PUBLIC\PROJECTS\JUB\HERRIMAN\83-17-040 CITY STANDARDS MANUAL UPDATE 2017\TEXT\SUBMITTALS\SECTION 6 (COMPLETE)\2020-11-05\IR\IR-DETAILS.DWG

NO.	REVISION DESCRIPTION	DATE

THIS DOCUMENT AND ANY ILLUSTRATIONS HEREON ARE PROVIDED AS STANDARD CONSTRUCTION DETAILS WITHIN HERRIMAN CITY. DEVIATION FROM THIS DOCUMENT REQUIRES APPROVAL OF HERRIMAN CITY. HERRIMAN CITY CANNOT BE HELD LIABLE FOR MISUSE OR CHANGES REGARDING THIS DOCUMENT.

HERRIMAN CITY

HERRIMAN CITY
ENGINEERING DEPARTMENT
LANDSCAPE
MANUAL DRAIN VALVE ASSEMBLY

IR-33

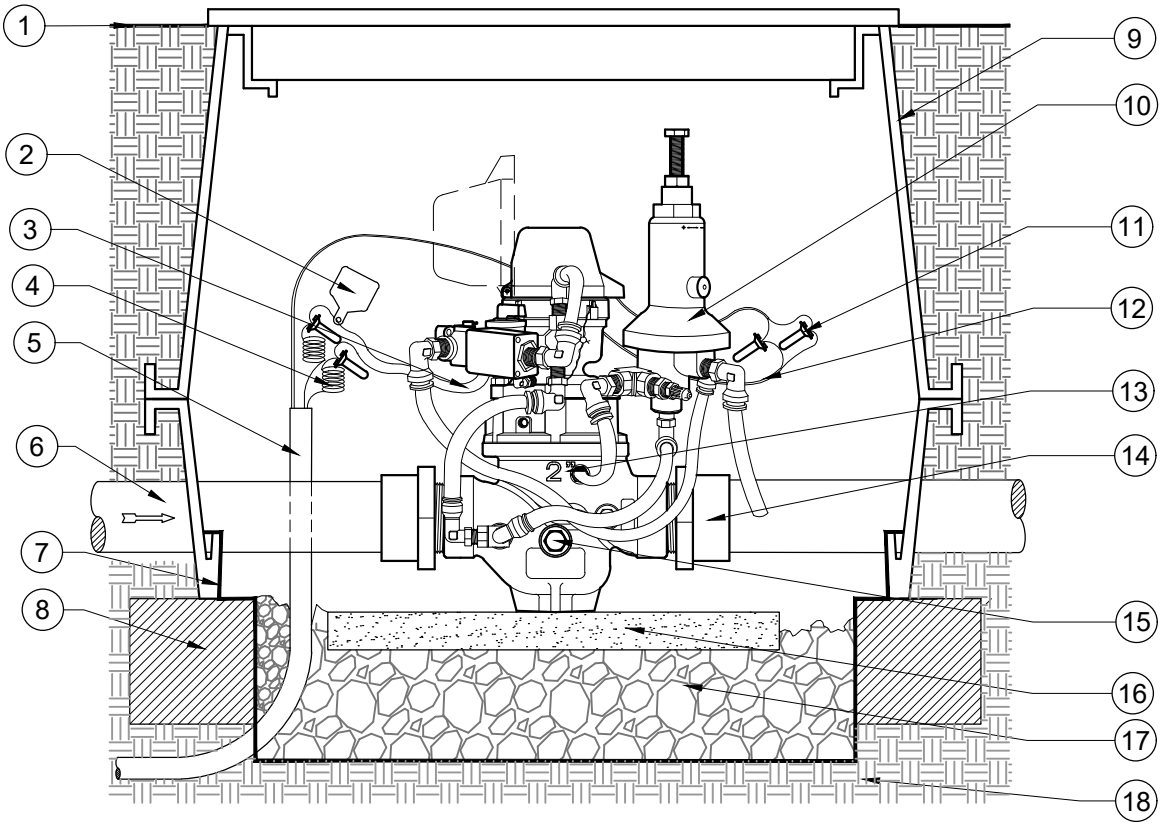

1. FINISH GRADE
2. VALVE ID TAG WITH "MV" PRINTED ON IT
3. MASTER VALVE WIRES FROM SOLENOID (INCLUDED)
4. PAIR OF WIRES, COLOR CODED DIFFERENT THAN OTHER VALVES. REFER TO CONTROLLER SPECS
5. 1 1/2" SCH 40 CONDUIT FROM CONTROLLER PER SPECS. PULL BOXES EVERY 200' AND ON EACH SIDE OF HARDSCAPE AREAS.
6. PVC MAINLINE PIPING PER IRRIGATION SPECS (PLAN SIZE)
7. FILTER FABRIC PER SPECS
8. 4"X4" TREATED TIMBER FRAME
9. JUMBO VALVE BOX (WITH EXTENSION(S) PER SPECS).
10. PRESSURE REDUCING PILOT
11. WATERPROOF WIRE CONNECTORS (3M DBY/DBR).
12. SHIELDED FLOW SENSOR WIRES TO CONTROLLER (PER CONTROLLER SPECS).
13. HYDROMETER – SEE IRRIGATION SCHEDULE
14. SCH. 80 PVC MIPT ADAPTOR SIZE PER VALVE AND MAINLINE PIPING (2 REQUIRED)
15. DRAINAGE NUT FOR WINTERAZATION (INCLUDED).
16. CONCRETE PAVER SUPPORT BLOCK.
17. COMPACTED 3/4" CRUSHED SEWER ROCK. 12" THICK MIN.
18. NATIVE SOIL COMPACTED TO 90% MDD PER ASTM D-1557

NO.	REVISION DESCRIPTION	DATE

THIS DOCUMENT AND ANY ILLUSTRATIONS HEREON ARE PROVIDED AS STANDARD CONSTRUCTION DETAILS WITHIN HERRIMAN CITY. DEVIATION FROM THIS DOCUMENT REQUIRES APPROVAL OF HERRIMAN CITY. HERRIMAN CITY CANNOT BE HELD LIABLE FOR MISUSE OR CHANGES REGARDING THIS DOCUMENT.

HERRIMAN CITY

HERRIMAN CITY
ENGINEERING DEPARTMENT
LANDSCAPE
HYDROMETER MASTER VALVE & FLOW SENSOR

IR-34

1/7/2021 4:53 PM \\SLCFILES\PUBLIC\PROJECTS\JUB\HERRIMAN\83-17-040 CITY STANDARDS MANUAL UPDATE 2017\TEXT\SUBMITTALS\SECTION 6 (COMPLETE)\2020-11-05\IR\IR-DETAILS.DWG

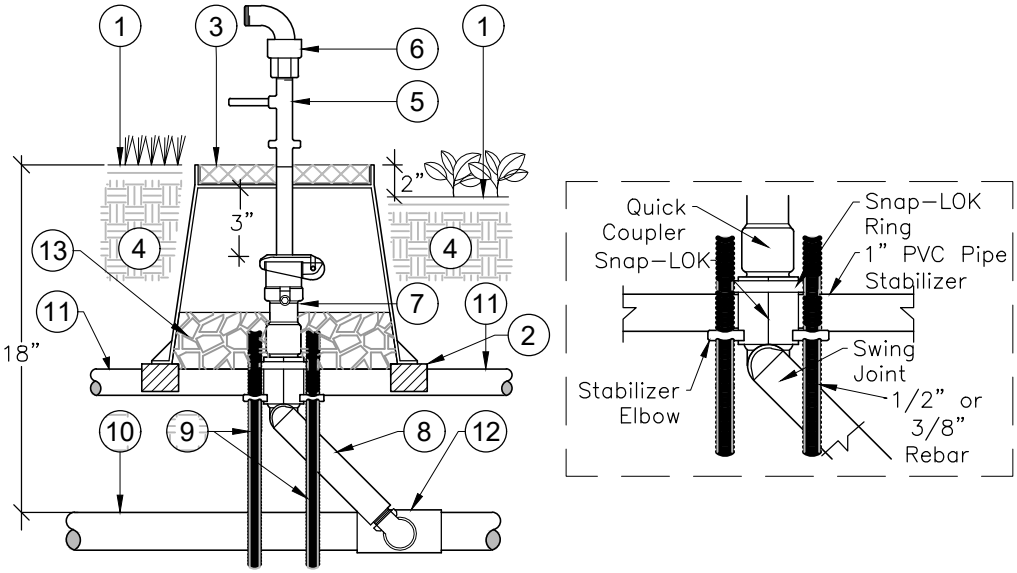

1. FINISH GRADE
2. 4"X4" TREATED TIMBER FRAME
3. 10" ROUND GREEN PLASTIC VALVE BOX W/ BOLT LOCK (CARSON OR APPROVED EQUAL)
4. APPROVED BACKFILL
5. QUICK COUPLER KEY
6. QUICK COUPLER HOSE SWIVEL
7. QUICK COUPLER VALVE (SEE IRRIGATION EQUIPMENT SCHEDULE)
8. LASCO STANDARD UNITIZED SWING JOINT, WITH SNAP–LOK STABILIZER ELBOW OUTLET. NOTE: INLET IS MPT, OUTLET IS BRASS MPT W/ SNAP–LOK
9. ⅜" OR ½" X 24" REBAR (2) REQUIRED
10. MAINLINE PIPE, PVC – SEE IRRIGATION PLAN
11. 1" PVC PIPE STABILIZER (OPTIONAL)
12. SERVICE TEE OR ELBOW, SCH. 40 (SIZE PER PLAN), SIZE TEE/ELBOW FIPT OUTLET BASED ON MIPT INLET SIZE OF THE SWING JOINT
13. 3–4" 3/4" CRUSHED SEWER ROCK

1/7/2021 4:53 PM \\SLCFILES\PUBLIC\PROJECTS\JUB\HERRIMAN\83-17-040 CITY STANDARDS MANUAL UPDATE 2017\TEXT\SUBMITTALS\SECTION 6 (COMPLETE)\2020-11-05\IR\IR-DETAILS.DWG

NO.	REVISION DESCRIPTION	D-TE

THIS DOCUMENT -ND -NY ILLUSTR-TIONS HEREON -RE PROVIDED -S ST-ND-RD CONSTRUCTION DET-ILS WITHIN HERRIM-N CITY. DEVI-TION FROM THIS DOCUMENT REQUIRES -PPROV-L OF HERRIM-N CITY. HERRIM-N CITY C-NNOT BE HELD LI-BLE FOR MISUSE OR CH-NGES REG-RDING THIS DOCUMENT.

HERRIMAN CITY

HERRIMAN CITY
ENGINEERING DEPARTMENT
LANDSCAPE
QUICK COUPLING VALVE ASSEMBLY

IR-35

EQUIPMENT SIZING TABLE

CITY METER SIZE	SHUT OFF SIZE	INITIAL MAIN LINE SIZE	RPA SIZE	FILTER SIZE	MASTER VALVE/ FLOW METER SIZE	MASTER VALVE/FLOW METER DEVICE	MAXIMUM AREA OF COVERAGE (8 HR. WATER WINDOW)
1"	1"	1 ½"	1"	2"	1 ½"	HYDROMETER	UP TO 20,000 SQ/FT
2"	2"	2"	1 ½"	2"	1 ½"	HYDROMETER	UP TO 50,000 SQ/FT
2"	2"	3"	2"	3"	2"	HYDROMETER	UP TO 115,000 SQ/FT
4"	4"	4"	3"	4"	3"	HYDROMETER	UP TO 165,000 SQ/FT
4"	4"	6"	4"	4"	3"	HYDROMETER	UP TO 300,000 SQ/FT
6"	6"	6"	6"	6"	4"	HYDROMETER	UP TO 450,000 SQ/FT

NOTES:

1. MINIMUM MAIN LINE SIZE ACCEPTABLE ON ANY IRRIGATION SYSTEM IS 1".
2. THIS CHART ASSUMES A SINGLE POC PER IRRIGATION SYSTEM.
3. STOP & WASTE VALVES SHALL NOT BE ALLOWED OR ACCEPTED BY HERRIMAN CITY FOR DESIGN OR CONSTRUCTION.
4. FOR AREAS OVER 450,000 SQ/FT OR 10.3 ACRES, CONSULT WITH HERRIMAN CITY PARKS, WATER & ENGINEERING TO DETERMINE PROPER EQUIPMENT SIZING.

\\SLCFILES\PUBLIC\PROJECTS\JUB\HERRIMAN\83-17-040 CITY STANDARDS MANUAL UPDATE 2017\TEXT\SUBMITTALS\SECTION 6 (COMPLETE)\2020-11-05\IR\IR-DETAILS.DWG
1/7/2021 4:53 PM

NO.	REVISION DESCRIPTION	D-TE

THIS DOCUMENT -ND -NY ILLUSTR-TIONS HEREON -RE PROVIDED -S ST-ND-RD CONSTRUCTION DET-ILS WITHIN HERRIM-N CITY. DEVI-TION FROM THIS DOCUMENT REQUIRES -PPROV-L OF HERRIM-N CITY. HERRIM-N CITY C-NNOT BE HELD LI-BLE FOR MISUSE OR CH-NGES REG-RDING THIS DOCUMENT.

HERRIMAN CITY

HERRIMAN CITY
ENGINEERING DEPARTMENT
LANDSCAPE
EQUIPMENT SIZING TABLE

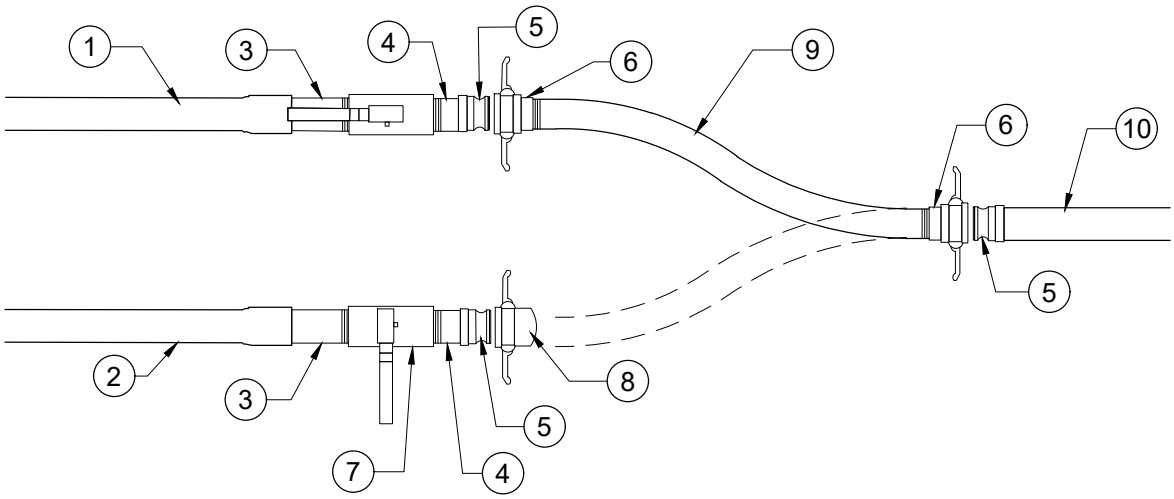

1. SECONDARY WATER SOURCE FROM FILTER
2. CULINARY SOURCE FROM BACKFLOW DEVICE
3. PVC TOE NIPPLE
4. THREAD NIPPLE
5. CAMLOCK MALE ADAPTER
6. CAMLOCK COUPLER
7. BRASS BALL OR GATE VALVE
8. CAMLOCK CAP
9. 200 PSI RED WATER HOSE
10. HOSE TO HYDROMETER

NOTES:

PLACE ASSEMBLY IN LARGE POLYCRETE CARSON VAULT. VAULT MUST BE LARGE ENOUGH TO ALLOW FOR CLEARANCE AROUND ALL VALVES AND CAMLOCKS, AND SWING OF HOSE FROM ONE SUPPLY TO ANOTHER. CITY MUST APPROVE VAULT PRIOR TO INSTALL

1/7/2021 4:54 PM \\SLCFILES\PUBLIC\PROJECTS\JUB\HERRIMAN\83-17-040 CITY STANDARDS MANUAL UPDATE 2017\TEXT\SUBMITTALS\SECTION 6 (COMPLETE)\2020-11-05\IR\IR-DETAILS.DWG

NO.	REVISION DESCRIPTION	D-TE

THIS DOCUMENT -ND -NY ILLUSTR-TIONS HEREON -RE PROVIDED -S ST-ND-RD CONSTRUCTION DET-ILS WITHIN HERRIM-N CITY. DEVI-TION FROM THIS DOCUMENT REQUIRES -PPROV-L OF HERRIM-N CITY. HERRIM-N CITY C-NNOT BE HELD LI-BLE FOR MISUSE OR CH-NGES REG-RDING THIS DOCUMENT.

HERRIMAN CITY

HERRIMAN CITY
ENGINEERING DEPARTMENT
LANDSCAPE
PHYSICAL DISCONNECT

IR-37

HERRIMAN CITY APPROVED IRRIGATION QUIPMENT LIST
June 2020

EQUIPMENT TYPE	DESCRIPTION	MANUFACTURER
Main Line (≥6")	PVC CL. 200 gasketed bell end	
Main Line (≤4")	PVC SCH. 40 solvent weld	
Main Line Fittings (≥6")	Mechanical Joint (M.J.) or Deep Bell push-on gasketed ductile iron	Harco or Leemco
Main Line Fittings (≤4")	PVC SCH. 80 solvent weld	
Lateral Line	PVC SCH. 40 solvent weld	
Lateral Line Fittings (all)	PVC SCH. 40 solvent weld (buried); PCV SCH. 80 solvent weld (exposed)	
Master Valve	Hydrometer	Netafim
Isolation Gate Valve (line size)	Cast or Ductile Iron, resilient wedge, non-rising stem, 2" square operating nut, fusion bonded epoxy	Matco, Nibco, Mueller, Milwaukee
Electric Remote Control Valve	Commercial grade, industrial strength glass-filled nylon globe valve	Rain Bird PEB and PESB Series
Drip Valve Assembly	Low volume control zone kit with valve, filter, and pressure regulator	Netafim or Rain Bird
Quick Coupling Valve	1" locking rubber cover, 2-piece body	Rain Bird 44-LRC
Manual Drain Valve (main line)	3/4" bronze irrigation ball valve, 2-piece, body, weld top	Apollo, No. 78-621-01
Manual Drain Valve (drip)	1/2" PVC ball valve	Netafim TLSOV
Backflow Preventer (≤2")	Reduced pressure backflow preventer	Wilkins / Zurn. No. 975XL Febco 825YA
Backflow Preventer (>2")	Reduced pressure backflow preventer	Wilkins / Zurn, No. 375; Febco 880V
Backflow Enclosure	Aluminum, marine grade	Strongbox (size by backflow preventer assembly dimensions and requirements)
Automatic Filter (2" - 4")	Plastic filter, automatic operation, battery operated	Amiad Mini Sigma Series
Automatic Filter (≥6")	Steel filter, automatic operation, hydraulic operation	Amiad Filtomat Series
Semi-automatic Filter (≤3")	Plastic filter, manual operation	Amiad Scanaway Series
Semi-automatic Filter (≥3")	Steel filter, manual operation	Amiad Scanaway Series

\\SLCFILES\PUBLIC\PROJECTS\JUB\HERRIMAN\83-17-040 CITY STANDARDS MANUAL UPDATE 2017\TEXT\SUBMITTALS\SECTION 6 (COMPLETE)\2020-11-05\IR\IR-DETAILS.DWG
1/7/2021 4:54 PM

NO.	REVISION DESCRIPTION	D-TE

THIS DOCUMENT -ND -NY ILLUSTR-TIONS HEREON -RE PROVIDED -S ST-ND-RD CONSTRUCTION DET-ILS WITHIN HERRIM-N CITY. DEVI-TION FROM THIS DOCUMENT REQUIRES -PPROV-L OF HERRIM-N CITY. HERRIM-N CITY C-NNOT BE HELD LI-BLE FOR MISUSE OR CH-NGES REG-RDING THIS DOCUMENT.

HERRIMAN CITY

HERRIMAN CITY
ENGINEERING DEPARTMENT
LANDSCAPE
IRRIGATION EQUIPMENT LIST (pg 1 of 2)

HERRIMAN CITY APPROVED IRRIGATION QUIPMENT LIST
June 2020

EQUIPMENT TYPE	DESCRIPTION	MANUFACTURER
Main Line (≥6")	PVC CL. 200 gasketed bell end	
Main Line (≤4")	PVC SCH. 40 solvent weld	
Main Line Fittings (≥6")	Mechanical Joint (M.J.) or Deep Bell push-on gasketed ductile iron	Harco or Leemco
Main Line Fittings (≤4")	PVC SCH. 80 solvent weld	
Lateral Line	PVC SCH. 40 solvent weld	
Lateral Line Fittings (all)	PVC SCH. 40 solvent weld (buried); PCV SCH. 80 solvent weld (exposed)	
Master Valve	Hydrometer	Netafim
Isolation Gate Valve (line size)	Cast or Ductile Iron, resilient wedge, non-rising stem, 2" square operating nut, fusion bonded epoxy	Matco, Nibco, Mueller, Milwaukee
Electric Remote Control Valve	Commercial grade, industrial strength glass-filled nylon globe valve	Rain Bird PEB and PESB Series
Drip Valve Assembly	Low volume control zone kit with valve, filter, and pressure regulator	Netafim or Rain Bird
Quick Coupling Valve	1" locking rubber cover, 2-piece body	Rain Bird 44-LRC
Manual Drain Valve (main line)	3/4" bronze irrigation ball valve, 2-piece, body, weld top	Apollo, No. 78-621-01
Manual Drain Valve (drip)	1/2" PVC ball valve	Netafim TLSOV
Backflow Preventer (≤2")	Reduced pressure backflow preventer	Wilkins / Zurn. No. 975XL Febco 825YA
Backflow Preventer (>2")	Reduced pressure backflow preventer	Wilkins / Zurn, No. 375; Febco 880V
Backflow Enclosure	Aluminum, marine grade	Strongbox (size by backflow preventer assembly dimensions and requirements)
Automatic Filter (2" - 4")	Plastic filter, automatic operation, battery operated	Amiad Mini Sigma Series
Automatic Filter (≥6")	Steel filter, automatic operation, hydraulic operation	Amiad Filtomat Series
Semi-automatic Filter (≤3")	Plastic filter, manual operation	Amiad Scanaway Series
Semi-automatic Filter (≥3")	Steel filter, manual operation	Amiad Scanaway Series

\\SLCFILES\PUBLIC\PROJECTS\JUB\HERRIMAN\83-17-040 CITY STANDARDS MANUAL UPDATE 2017\TEXT\SUBMITTALS\SECTION 6 (COMPLETE)\2020-11-05\IR\IR-DETAILS.DWG
1/7/2021 4:54 PM

NO.	REVISION DESCRIPTION	D-TE

THIS DOCUMENT -ND -NY ILLUSTR-TIONS HEREON -RE PROVIDED -S ST-ND-RD CONSTRUCTION DET-ILS WITHIN HERRIM-N CITY. DEVI-TION FROM THIS DOCUMENT REQUIRES -PPROV-L OF HERRIM-N CITY. HERRIM-N CITY C-NNOT BE HELD LI-BLE FOR MISUSE OR CH-NGES REG-RDING THIS DOCUMENT.

HERRIMAN CITY

HERRIMAN CITY
ENGINEERING DEPARTMENT
LANDSCAPE
IRRIGATION EQUIPMENT LIST (pg 2 of 2)

SURVEYOR'S CERTIFICATE

I, _____, do hereby certify that I am a Registered Civil Engineer, and or Land Surveyor, and that I hold certificate No._____, as prescribed under the laws of the State of Utah. I further certify that by authority of the Owners, I have made a survey of the tract of land shown on this plat and described below, and have subdivided said tract of land into lots and streets, hereafter to be known as _____ and that same has been correctly surveyed and staked on the ground as shown on this plat.

BOUNDARY DESCRIPTION

_____ _____

Date

OWNER'S DEDICATION

Known all men by these presents that _____, the _____undersigned Owner(s) of the above described tract of land, having caused same to be subdivided into lots and streets to be hereafter known as the

_____

do hereby dedicate for perpetual use of the public all parcels of land shown on this plat as intended for Public use. Owner(s) hereby agree to warrant and defend and save the City harmless against any easements or other encumbrance on a dedicated street which will interfere with the City's use, maintenance, and operation of the street.
In witness whereof _____ have hereunto set _____ this _____ day of _____ A.D., 20_____

ACKNOWLEDGEMENT

STATE OF UTAH : S.S.
County of Salt Lake :
On this _____ day of _____ , in the year 20____, before me _____, personally appeared _____, proved on the basis of satisfactory evidence to be the person whose name is subscribed to in this document, and acknowledged that he executed the same.

_____
NOTARY PUBLIC

NOTES:

1. IT WILL BE THE DEVELOPER'S RESPONSIBILITY TO USE APPROPRIATE NOTARY ACKNOWLEDGEMENT *(SEE APPENDIX B)*.

2. ALL FINAL PLAT SUBMITTALS MUST INCLUDE A TITLE REPORT NO OLDER THAN 30 DAYS.

TABULATIONS:

1. *TOTAL PLAT ACREAGE_____ACRES*
2. *TOTAL LOT ACREAGE_____ACRES*
3. *TOTAL ACREAGE IN STREETS_____ACRES*
4. *TOTAL ACREAGE IN OPEN SPACE__ACRES*
5. *AVERAGE LOT SIZE_____S.F.*
6. *NUMBER OF LOTS_____#*

HEALTH DEPARTMENT
APPROVED THIS_____ DAY OF_____ A.D. 20____ BY HEALTH DEPARTMENT
DIRECTOR, SALT LAKE CO. HEALTH DEPARTMENT

ROCKY MOUNTAIN POWER
APPROVED THIS_____ DAY OF_____ A.D. 20____ BY ROCKY MOUNTAIN POWER
ROCKY MOUNTAIN POWER

JORDAN BASIN IMPROVEMENT DISTRICT
APPROVED THIS_____ DAY OF_____ A.D. 20____ BY J.B.I.D.
J.B.I.D.

DOMINION ENERGY
APPROVED THIS_____ DAY OF_____ A.D. 20 _____ BY DOMINION ENERGY
DOMINION ENERGY

CHECKED FOR ZONING
ZONE:_____ DATE:_____
AREA:_____ WIDTH:_____
NAME:_____

PLANNING COMMISSION
APPROVED THIS_____ DAY OF_____ A.D. 20____ BY HERRIMAN PLANNING COMMISSION
CHAIRMAN, HERRIMAN PLANNING COMMISSION

HERRIMAN CITY MUNICIPAL WATER
APPROVED THIS _____ DAY OF A.D. 20 BY HERRIMAN CITY MUNICIPAL WATER
HERRIMAN CITY

HERRIMAN CITY ENGINEER
I HERE BY CERTIFY THAT THIS OFFICE HAS EXAMINED THIS PLAT AND IT IS CORRECT IN ACCORDANCE WITH INFORMATION ON FILE IN THIS OFFICE
DATE HERRIMAN CITY ENGINEER

APPROVAL AS TO FORM
APPROVED AS TO FORM THIS_____ DAY OF_____ A.D. 20____
HERRIMAN CITY ATTORNEY

HERRIMAN CITY
APPROVED THIS_____ DAY OF_____ A.D. 20___ BY HERRIMAN CITY
ATTEST: RECORDER PLANNING DIRECTOR

RECORD #
STATE OF UTAH COUNTY OF SALT LAKE RECORDED AND FILED AT THE REQUEST OF
DATE_____TIME _____BOOK_____PAGE_____
FEE $
SALT LAKE COUNTY RECORDER

APPENDIX A:
BOND AGREEMENTS

See
Cashier's Check
Escrow
Irrevocable Letter of Credit

APPENDIX B:
BASIC FORMS OF ACKNOWLEDGEMENT

See
Basic Forms of Acknowledgement

APPENDIX C:
USPS PLACEMENT OF MAILBOXES

See
Placement of Mailboxes

APPENDIX D: BANNER PERMIT AND LOCATION MAPS

See
Banners

APPENDIX E:
LAND DISTURBANCE PERMIT

See
Land Disturbance Permit

APPENDIX F:
HILLSIDE DEVELOPMENT MAP

See
Hillside Overlay Map

APPENDIX G:
WATER EFFICIENCY STANDARDS

See
Water Efficiency Standards

APPENDIX H:
FIRE FLOW TEST REPORT REQUIREMENTS

See
Fire Flow Test Report Requirements

APPENDIX I:
FLOODPLAIN DEVELOPMENT PERMIT

See
Floodplain Development Permit

APPENDIX J:
STORMWATER QUALITY REPORT TEMPLATE

See
Stormwater Quality Report Template

APPENDIX K:
PROJECT WATER DEMAND SUMMARY FORM

See
Floodplain Development Permit

APPENDIX L:
LOGO AREA MAP

See
Herriman Logo Map

APPENDIX M:
DEVIATION FROM STANDARDS

See
Deviation from Standards Application

APPENDIX N: HYDRAULIC MODELING REVIEW CHECKLIST

See
Hydraulic Modeling Review Checklist